SONY®

VIDEOCORDER

BVH-2000PS

The function control panel, side panels and handles in this photograph shown are optionally available.

Le panneau de contrôle des fonction, les panneaux latéraux et les poignées présentés sur cette photographie sont disponibles comme équipements en option.

Das hier abgebildete Bedienungspult, die Seitenteile und die Griffe sind gesondert lieferbares Zubehör.

OPERATION AND MAINTENANCE MANUAL

Volume 3 1st Edition (Revised 9)

Serial No. 10001 and Higher

ご注意

このマニュアルに記載されている事柄の著作権は当社にあり，説明内容は機器購入者の使用を目的としています。
従って，当社の許可なしに無断で複写したり，説明内容(操作，保守等)と異なる目的で本マニュアルを使用することを禁止します。

CONFIDENTIAL

The material contained in this manual consists of information that is the property of Sony Corporation and is intended solely for use by the purchasers of the equipment described in this manual.
Sony Corporation expressly prohibits the duplication of any portion of this manual or the use thereof for any purpose other than the operation or maintenance of the equipment described in this manual without the express written permission of Sony Corporation.

CONFIDENTIEL

Le matériel contenu dans ce manuel consiste en informations qui sont la propriété de Sony Corporation et sont destinées exclusivement à l'usage des acquéreurs de l'équipement décrit dans ce manuel.
Sony Corporation interdit formellement la copie de quelque partie que ce soit de ce manuel ou son emploi pour tout autre but que des opérations ou entretiens de l'équipement à moins d'une permission écrite de Sony Corporation.

VERTRAULICH

Das in dieser Anleitung enthaltene Material besteht aus Informationen, die Eigentum der Sony Corporation sind, und ausschließlich zum Gebrauch durch den Käufer der in dieser Anleitung beschriebenen Ausrüstung bestimmt sind.
Die Sony Corporation untersagt ausdrücklich die Vervielfältigung jeglicher Teile dieser Anleitung oder den Gebrauch derselben für irgendeinen anderen Zweck als die Bedienung oder Wartung der in dieser Anleitung beschriebenen Ausrüstung ohne ausdrückliche schriftliche Erlaubnis der Sony Corporation.

TABLE OF CONTENTS

Volume 1

1. OPERATION
1. FONCTIONNEMENT
1. BETRIEB

Volume 2

2. INSTALLATION
3. PERIODIC CHECK & MAINTENANCE
4. SERVICE INFORMATION
5. THEORY OF OPERATION
6. REPLACEMENT
7. GENERAL INFORMATION FOR ALIGNMENT
8. PREPARATION FOR ALIGNMENT
9. POWER SUPPLY ALIGNMENT
10. TAPE PATH SYSTEM ALIGNMENT
11. SERVO SYSTEM ALIGNMENT
12. AUDIO SIGNAL SYSTEM ALIGNMENT
13. VIDEO SIGNAL SYSTEM ALIGNMENT
14. DT SYSTEM ALIGNMENT

Volume 3

A. BLOCK DIAGRAMS

Audio-1 & 2 Signal System A-4
AU-27/AP-06/LA-02/VR/MS Boards
Audio-3 Signal System (00/02) A-7
AE-03/AP-06/LA-02/VR Boards
Audio-3 & 4 Signal System (04) ..... A-9(5/7)
AE-03/AP-06/LA-02/VR Boards
Bias/Erase A-10
BE-02/03/04 Boards

Video Signal System Overall Block Diagram (02/04) . A-13
Video Signal System Overall Block Diagram (00) ... A-16
MD-14 Board; Video Modulator A-19
DQ-02 Board; Video PB Equalizer A-22
DM-25 Board; Video Demodulator A-28
DT-05 Board; DT Control A-31

Servo System Overall Block Diagram A-37
SV-43 Board; Servo CPU A-40
RL-12 Board; Reel Servo A-43
CD-17 Board; Capstan/Drum Servo A-45
SR-15 Board; Servo Ref. Signal Generator A-47
DA-07 Board; Drum Motor Driver A-49
CA-09 Board; Capstan Motor Driver A-51
RA-05 Board; Reel Motor Driver A-53

LG-02/LG-02 (A) Board; Logic A-55
SY-79 Board; System Control CPU-1 ..... A-57
SY-80 Board; System Control CPU-2 ..... A-59

Power Supply (1/2) A-61
AC-39/FV-01 Boards
Power Supply (2/2) A-63
VV-02/FV-02/PS-14 Boards

B. SEMICONDUCTOR PIN ASSIGNMENTS

Semiconductor Index B-1
Diode B-5
Transistor B-5
IC B-7
PROM B-45

C. SCHEMATIC DIAGRAMS & BOARD LAYOUT

CARD RACK

AU-27 Board; Audio-1, 2 REC EQ/PB Amp ... C-4
AE-03 Board; Audio-3 REC EQ/PB Amplifier .. C-10
EQ-02 Board; Video PB Equalizer C-16
DM-25 Board; Video Demodulator C-22
MD-14 Board; Video Modulator C-28
LG-02 Board; Logic (Serial No. #1XXXX) C-34
LG-02 (A) Board; Logic (Serial No. #2XXXX) . C-39(2/7)
SY-79 Board; System Control CPU-1 ..... C-40
SY-80 Board; System Control CPU-2 ..... C-52
SV-43 Board; Servo CPU C-58
RL-12 Board; Reel Servo C-65
CD-17 Board; Capstan/Drum Servo C-78
SR-15 Board, Servo Ref. Signal Generator C-90
DT-05 Board; DT Control C-96
MB-14 Board; Mother Board C-105
Frame Wiring; Card Rack C-111

TAPE TRANSPORT

AP-06 Board; Audio/CTL REC/PB Preamplifier . C-115
BE-02 Board; Audio Bias/Erase Oscillator C-122
BE-03 Board; Audio Bias Amplifier C-128
BE-04 Board; Audio Bias Level Adj. C-128
Head Drum (02/04) C-133
DR-13 Board; Video/Sync PB Amp (Play Head)
DR-14 Board; Rotary Head Relaying
DR-15 Board; Rotary Head Relaying
DR-16 Board; Rotary Head Relaying
SL-07 Board; Slip Ring Relaying
SL-08 Board; Slip Ring Relaying
SL-09 Board; Slip Ring Relaying
Head Drum (00) ..... C-136(2/5)
DR-14 Board; Rotary Head Relaying
DR-15 Board; Rotary Head Relaying
DR-16 Board; Rotary Head Relaying
DR-20 Board; Rotary Head Relaying
RP-09 Board; Video R/P Amp (R/P Head) C-137
DD-01 Board; DT Driver C-141
DA-07 Board; Drum Motor Driver C-144
CA-09 Board; Capstan Motor Driver C-147
RA-05 Board; Reel Motor Driver C-151
TT-01 Board; TTP AUX C-156
Frame Wiring; Tape Transport C-163
HM-05 Board; Head Hours Meter
HM-06 Board; Running/Op Hours Meter
TM-16 Board; Running/Op Hours Meter
TD-05 Board; Tape Detector
TH-03 Board; Threading Motor
MOTOR Board; IP Roller Motor Driver
TR-07 Board; Timer Roller Sensor
HD-06 Board; Video/Sync Erase Head
CEH-2 Board; Audio/CTL Erase Head
HD-07 Board; Audio/CTL R/P, Monitor Head
HD-08 Board; Audio/CTL R/P, Monitor Head

LEVEL CONTROL PANEL

VR-05 Board; Level Control/Indicator C-169
VR-07 Board; Level Control/Indicator ..... C-172(2/5)
Frame Wiring; Level Control Panel C-173
ML-02 Board; Meter Lamp
MS-07 Board; Monitor Select
ML-03 Board; Meter Lamp
MS-08 Board; Monitor Select

POWER SUPPLY

AC-39 Board; Primary Rectifier C-178
FV-02 Board; Switching Regulator C-183
VV-01 Board; Switching Regulator C-187
FV-01 Board; Switching Regulator C-191
PS-14 Board; Series Regulator C-195
Frame Wiring; Power Supply C-207
CN-54 Board; Fan Motor Relaying

CONNECTOR PANEL

LA-02 Board; Audio Line IN/OUT Amplifier .. C-214
VM-01 Board; Video Buffer/Monitor Select ... C-220
Frame Wiring; Audio/Video CN Panel C-225
CN-37 Board; Video Connector Panel
Frame Wiring; Remote Connector Panel C-230
CN-49 Board; Remote Connector Panel

Volume 4

D. REPLACEABLE PARTS & OPTIONAL FIXTURE

E. CHANGED PARTS

AUDIO-1 & 2 SIGNAL SYSTEM

- AU-27 BOARD
- AP-06 BOARD
- LA-02 BOARD
- VR BOARD
- MS BOARD

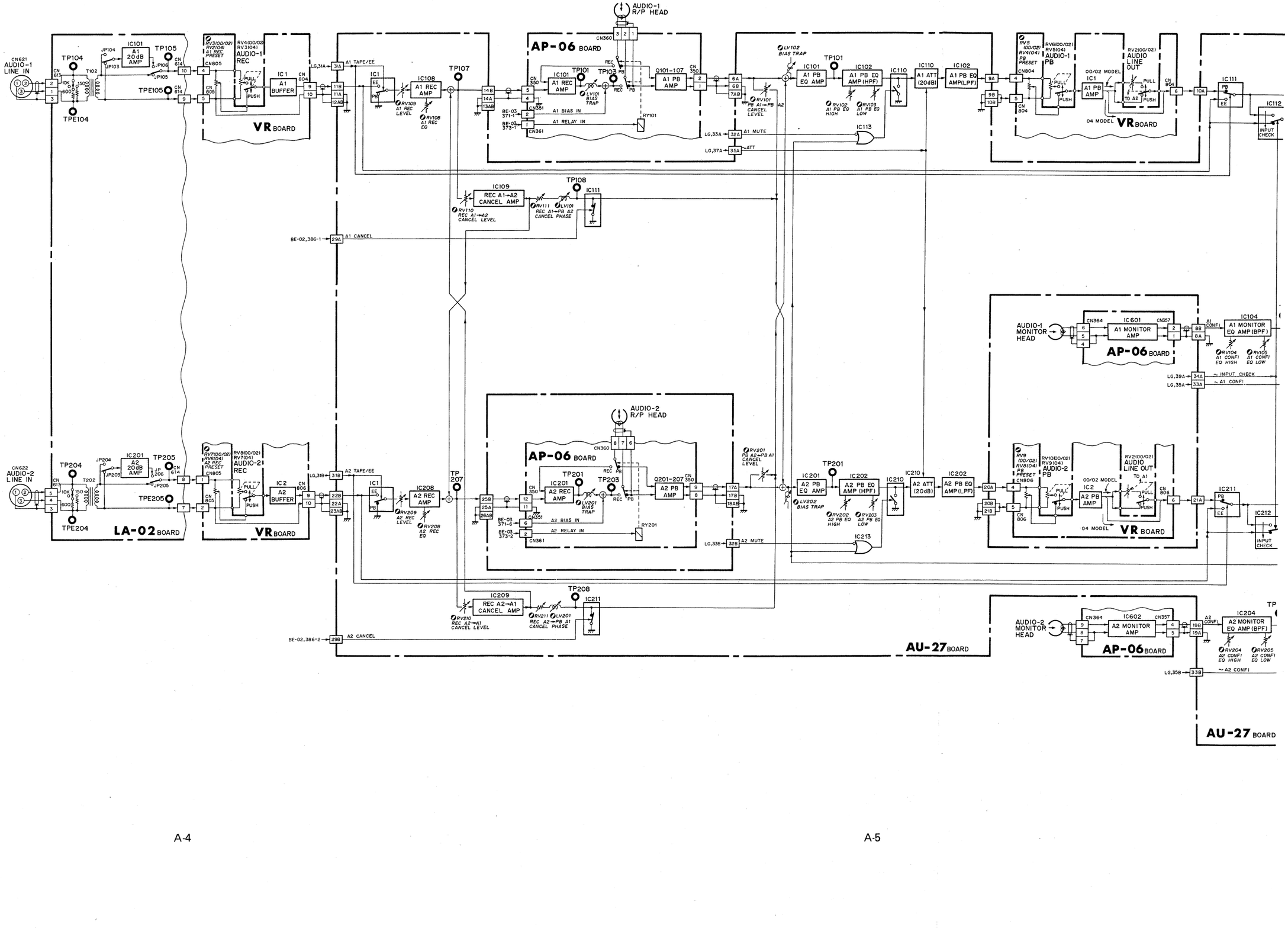

AUDIO-1 & 2 SIGNAL SYSTEM
AU-27, AP-06, LA-02, VR, MS
BLOCK DIAGRAM

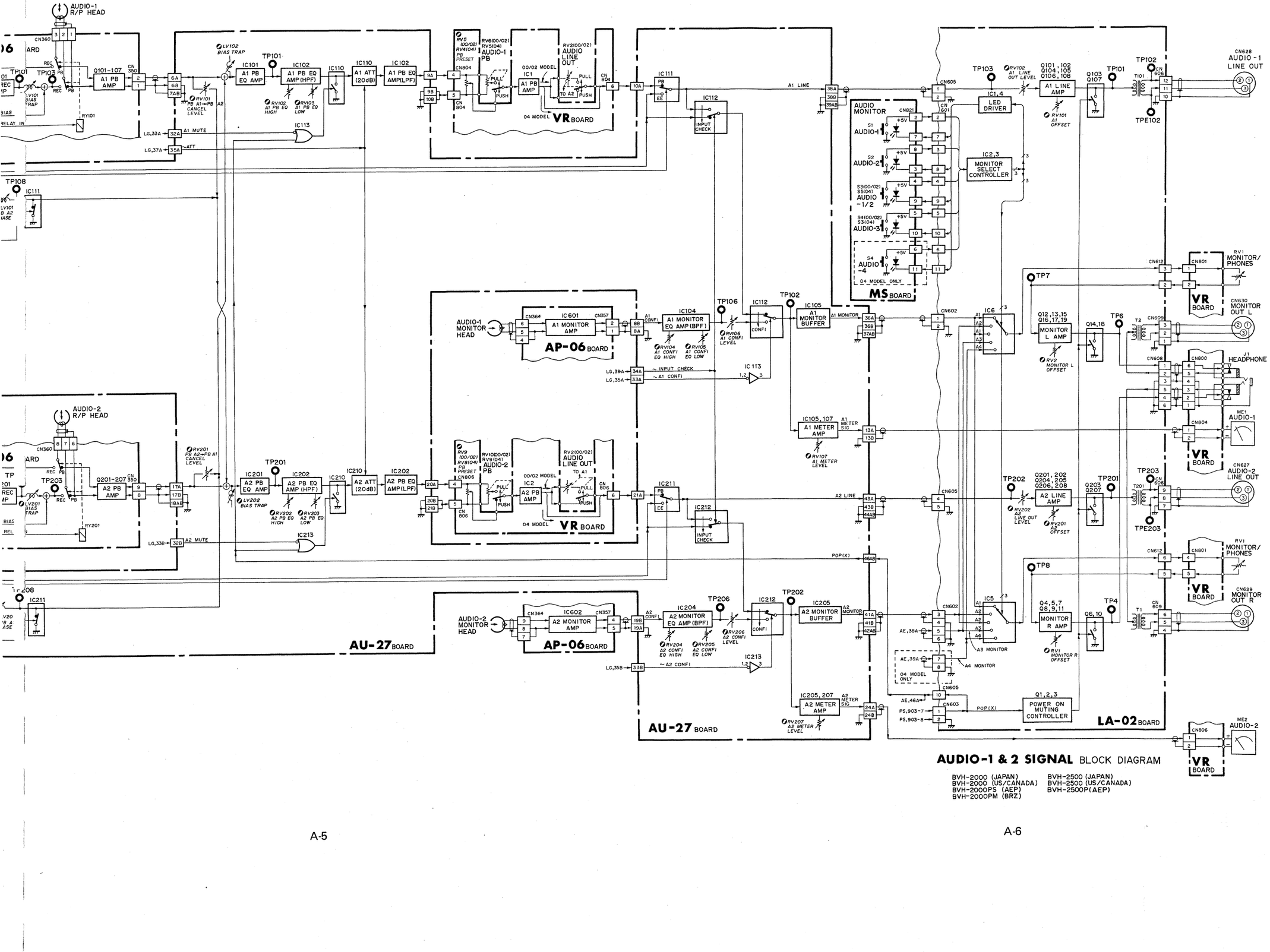

AUDIO-1 & 2 SIGNAL BLOCK DIAGRAM

BVH-2000 (JAPAN)
BVH-2000 (US/CANADA)
BVH-2000PS (AEP)
BVH-2000PM (BRZ)

BVH-2500 (JAPAN)
BVH-2500 (US/CANADA)
BVH-2500P(AEP)

AUDIO-3 SIGNAL SYSTEM (FOR 00/02)
BLOCK DIAGRAM

AUDIO-3 SIGNAL SYSTEM

- AE-03 BOARD
- AP-06 BOARD
- LA-02 BOARD
- VR BOARD

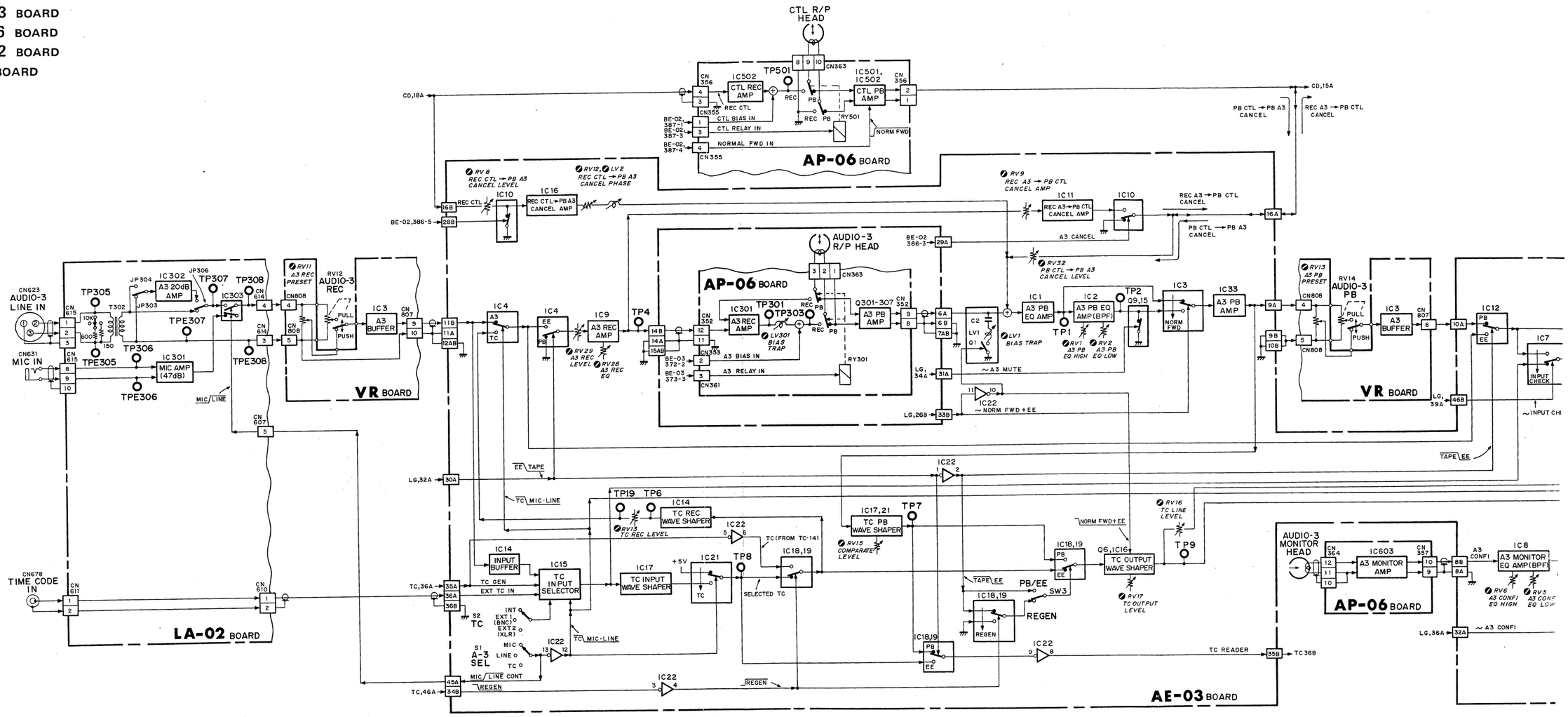

AE-03, AP-06, LA-02, VR BLOCK DIAGRAM AUDIO-3 SIGNAL SYSTEM (FOR 00/02)

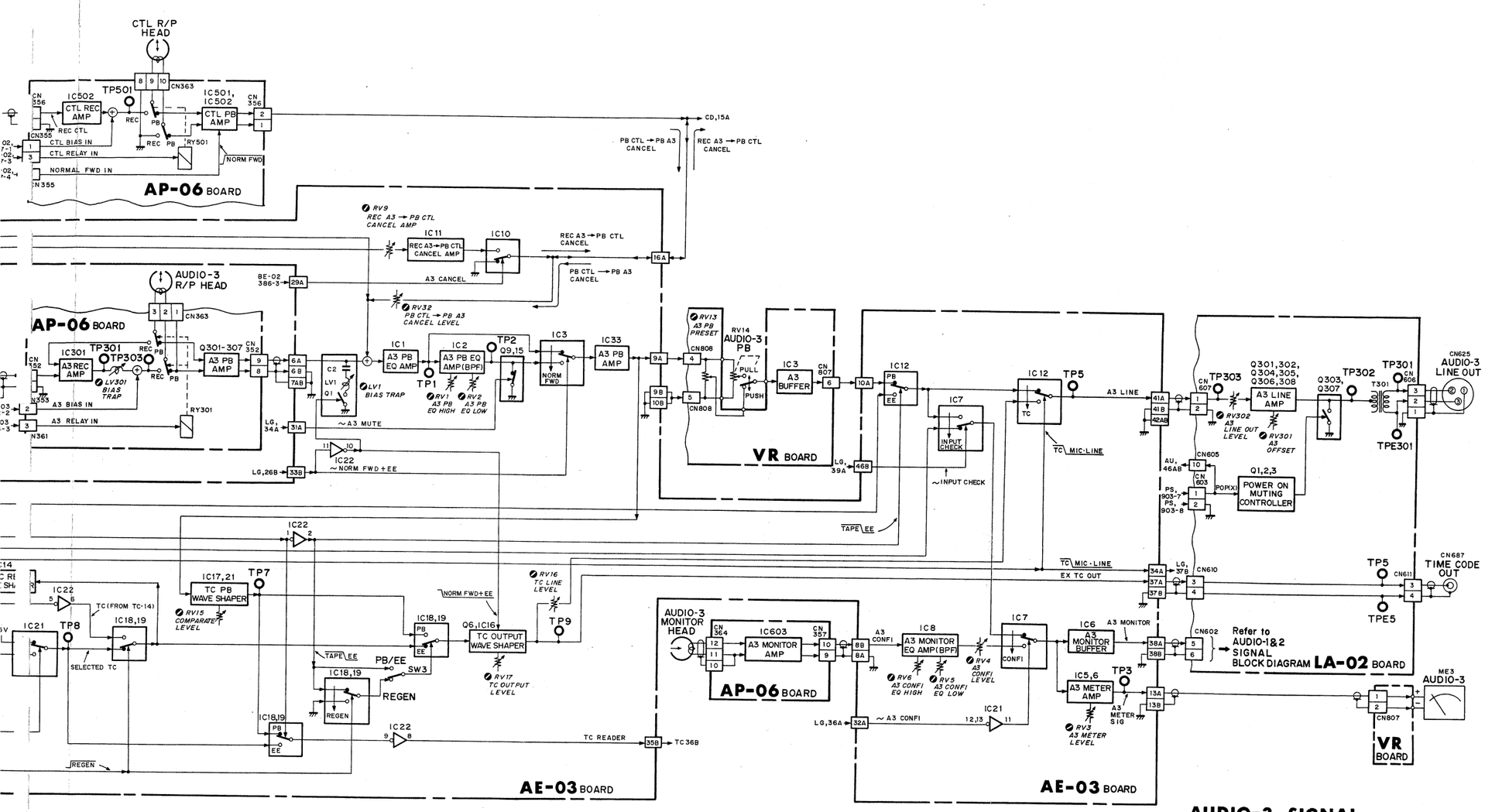

AUDIO-3 SIGNAL CTL REC/PB AMP TC SELECT

BLOCK DIAGRAM (00/02 MODEL)

BVH-2000(J) ;# 10501–	BVH-2500(J) ;# 10001–
BVH-2000(U/C) ;# 10501–	BVH-2500(U/C) ;# 10001–
BVH-2000PS ;# 10301–	BVH-2500P ;# 10001–
BVH-2000PM ;# 10001–	

AUDIO-3 & 4 SIGNAL SYSTEM (FOR 04) — AE-03, AP-06, LA-02, VR BLOCK DIAGRAM

AUDIO-3 & 4 SIGNAL SYSTEM

- AE-03 BOARD
- AP-06 BOARD
- LA-02 BOARD
- VR BOARD

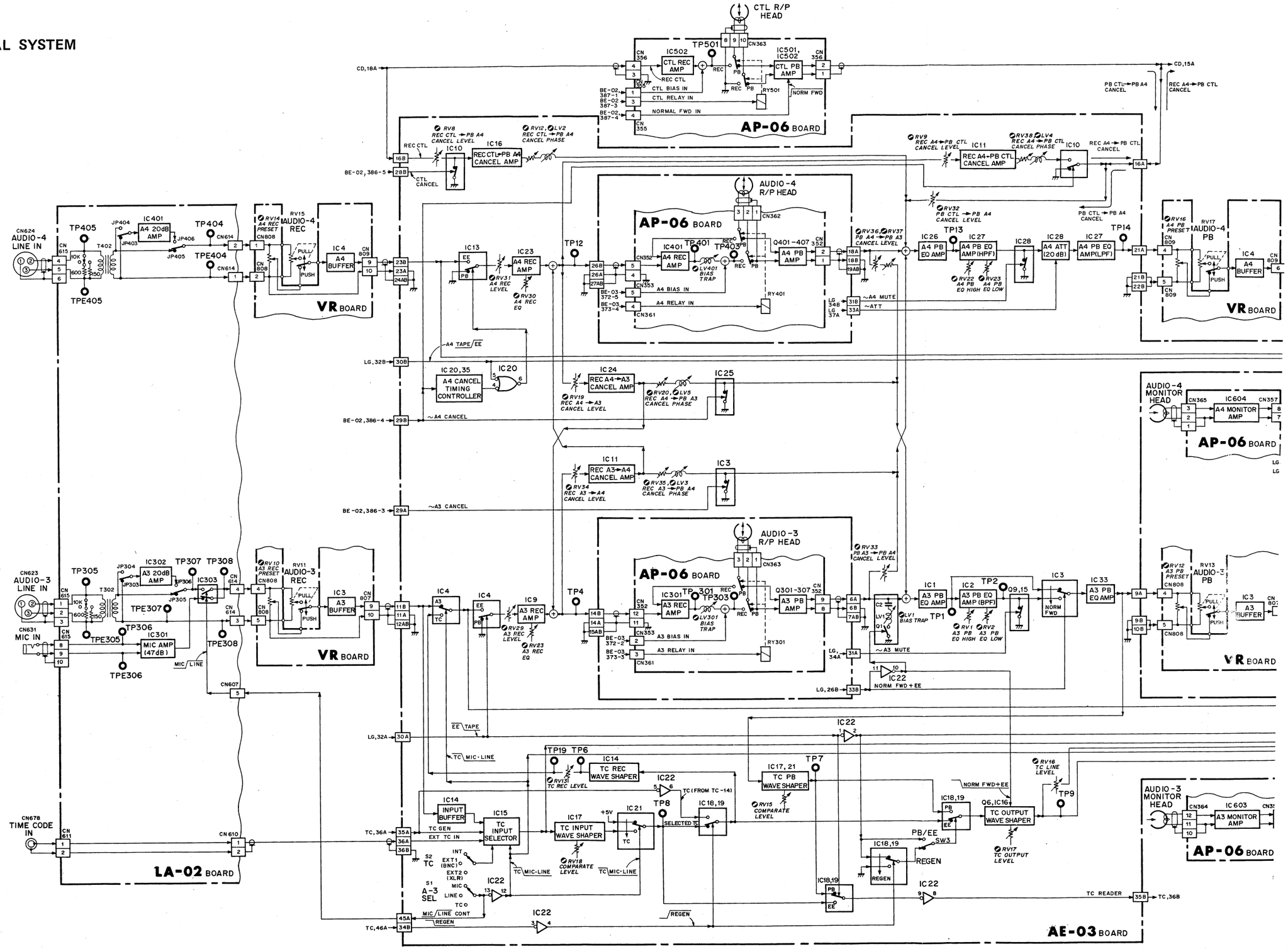

A-9(5/7)

A-9(6/7)

AE-03, AP-06, LA-02, VR BLOCK DIAGRAM AUDIO-3 & 4 SIGNAL SYSTEM (FOR 04)

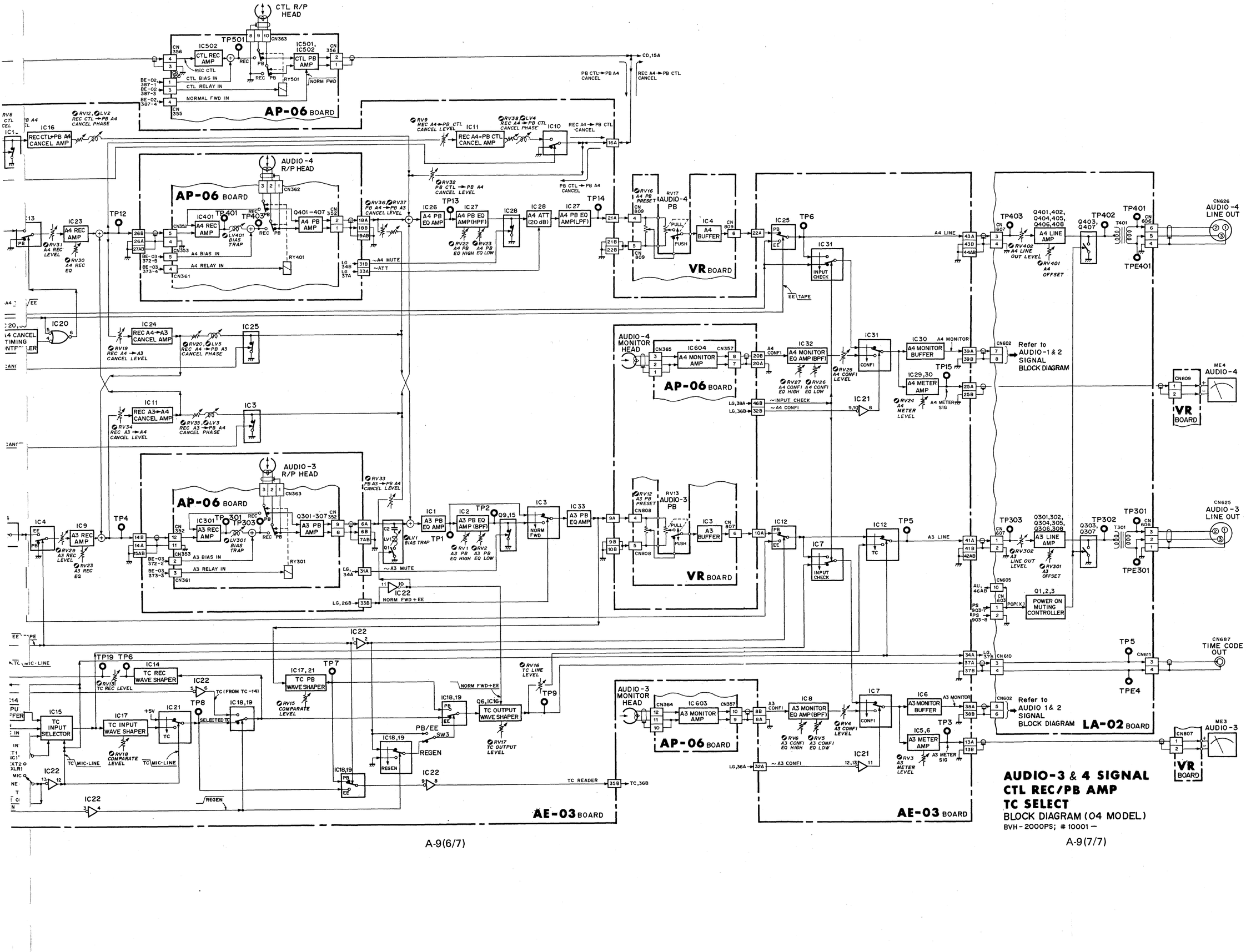

AUDIO-3 & 4 SIGNAL CTL REC/PB AMP TC SELECT
BLOCK DIAGRAM (04 MODEL)
BVH-2000PS; # 10001 —

BIAS/ERASE

BE-02 BOARD
BE-03 BOARD
BE-04 BOARD

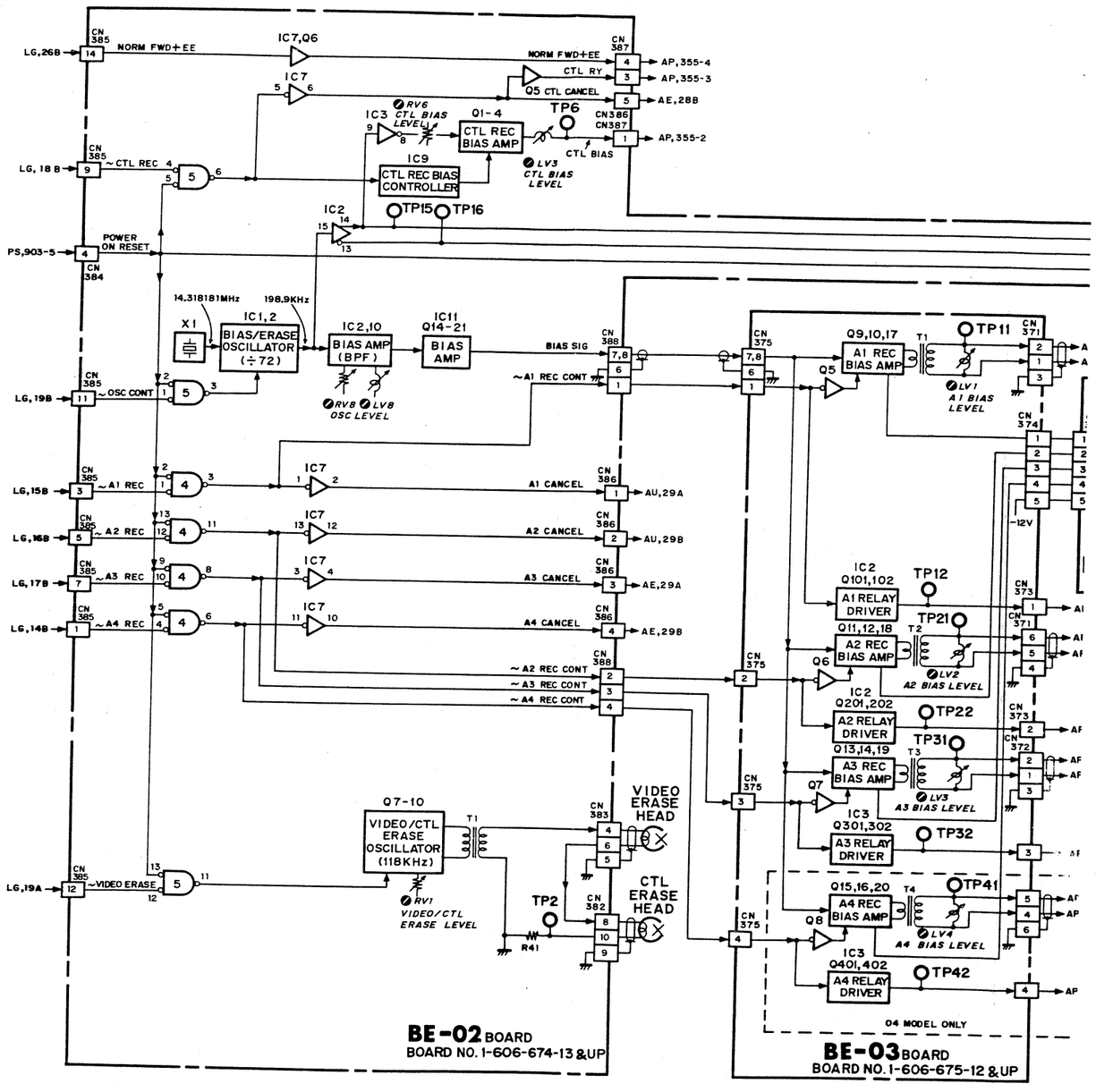

BIAS/ERASE BE-02/03/04 BLOCK DIAGRAM

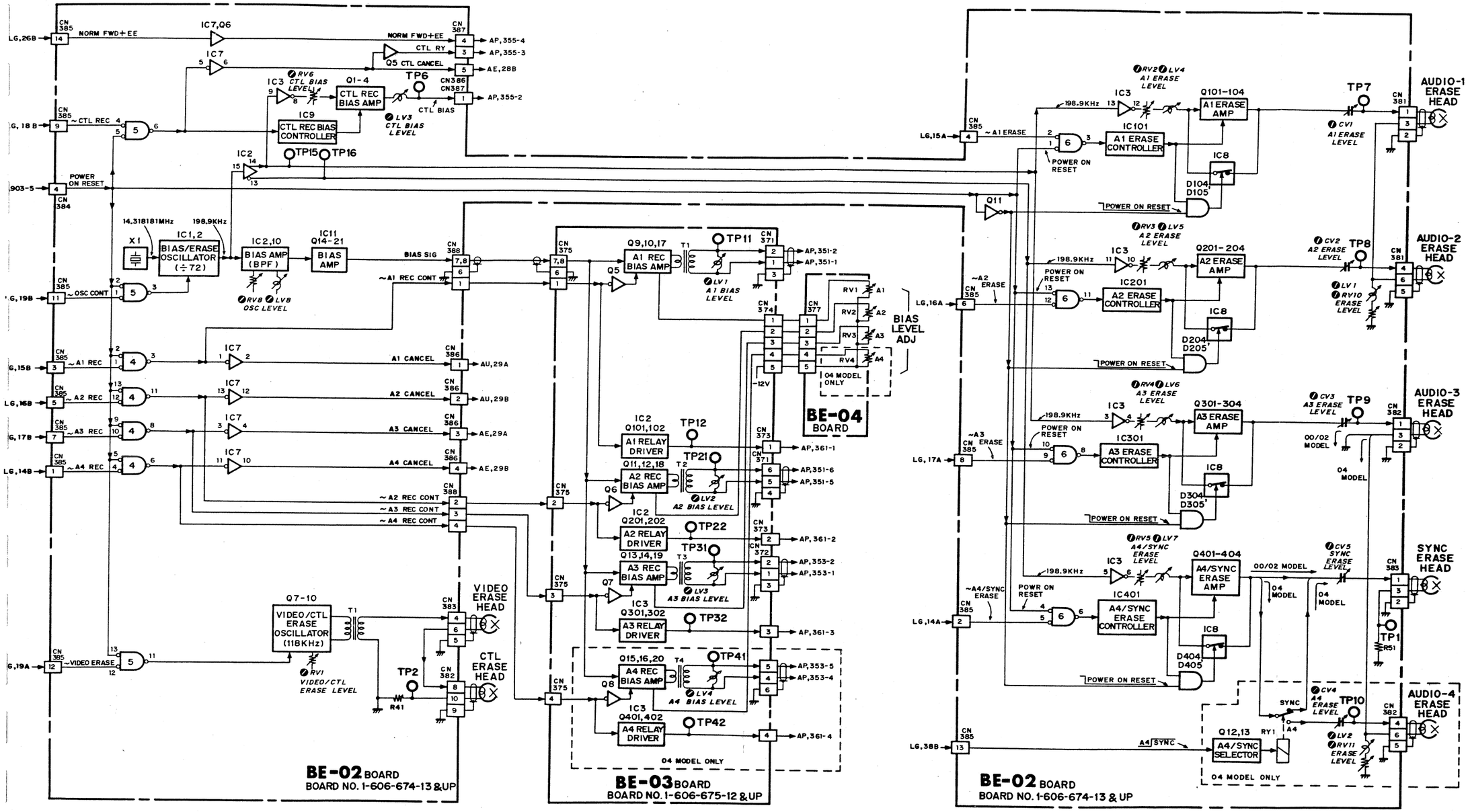

AUDIO BIAS/ERASE AMP
VIDEO ERASE AMP
BLOCK DIAGRAM

BVH-2000(J) ;# 10501-
BVH-2000(U/C) ;# 10501-
BVH-2000PS ;# 10301-
BVH-2000PM ;# 10001-
BVH-2500(J) ;# 10001-
BVH-2500(U/C) ;# 10001-

VIDEO SIGNAL SYSTEM OVERALL BLOCK DIAGRAM

FOR 02/04 MODELS

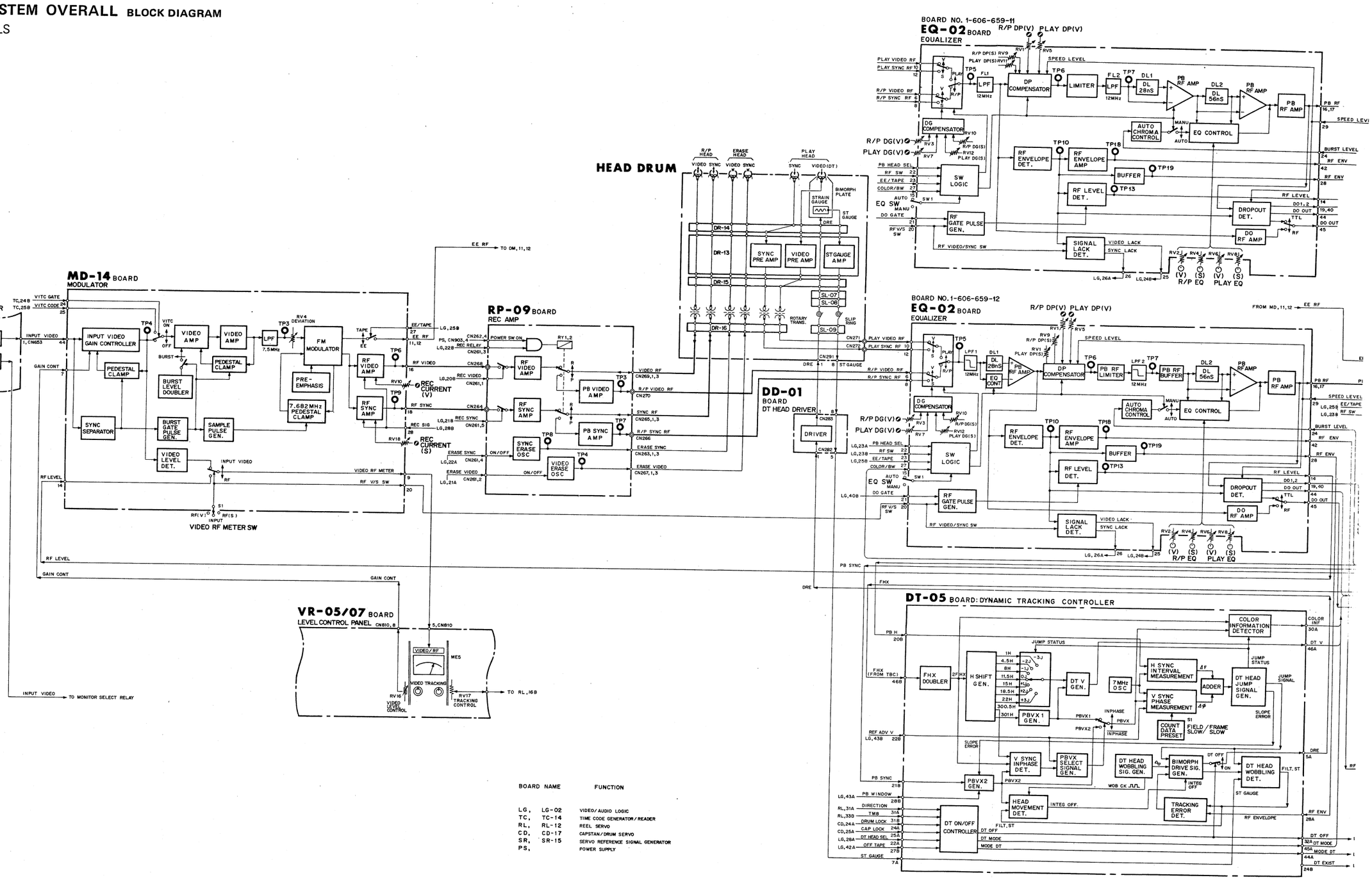

BOARD NAME		FUNCTION
LG,	LG-02	VIDEO/AUDIO LOGIC
TC,	TC-14	TIME CODE GENERATOR/READER
RL,	RL-12	REEL SERVO
CD,	CD-17	CAPSTAN/DRUM SERVO
SR,	SR-15	SERVO REFERENCE SIGNAL GENERATOR
PS,		POWER SUPPLY

HEAD DRUM

RP-09 BOARD
REC AMP

DD-01
BOARD
DT HEAD DRIVER

BOARD NO. 1-606-659-11
EQ-02 BOARD
EQUALIZER

BOARD NO.1-606-659-12
EQ-02 BOARD
EQUALIZER

DT-05 BOARD: DYNAMIC TRACKING CONTROLLER

DM-25 BOARD
DEMODULATOR

PLUG-IN TBC (BKH-2200)
AD-13 BOARD
MY-16 BOARD
SG-66 BOARD
PR-37 BOARD

MS-07/08 BOARD
MONITOR SELECTOR

VM-01 BOARD
VIDEO BUFFER/MONITOR

CN-37 BOARD
CONNECTOR PANEL

BOARD NAME		FUNCTION
LG,	LG-02	VIDEO/AUDIO LOGIC
TC,	TC-14	TIME CODE GENERATOR/READER
RL,	RL-12	REEL SERVO
CD,	CD-17	CAPSTAN/DRUM SERVO
SR,	SR-15	SERVO REFERENCE SIGNAL GENERATOR
PS,		POWER SUPPLY

VIDEO SIGNAL SYSTEM OVERALL BLOCK DIAGRAM
BVH-2000PS 02/04 MODELS

VIDEO SIGNAL SYSTEM OVERALL BLOCK DIAGRAM; FOR 00 MODEL

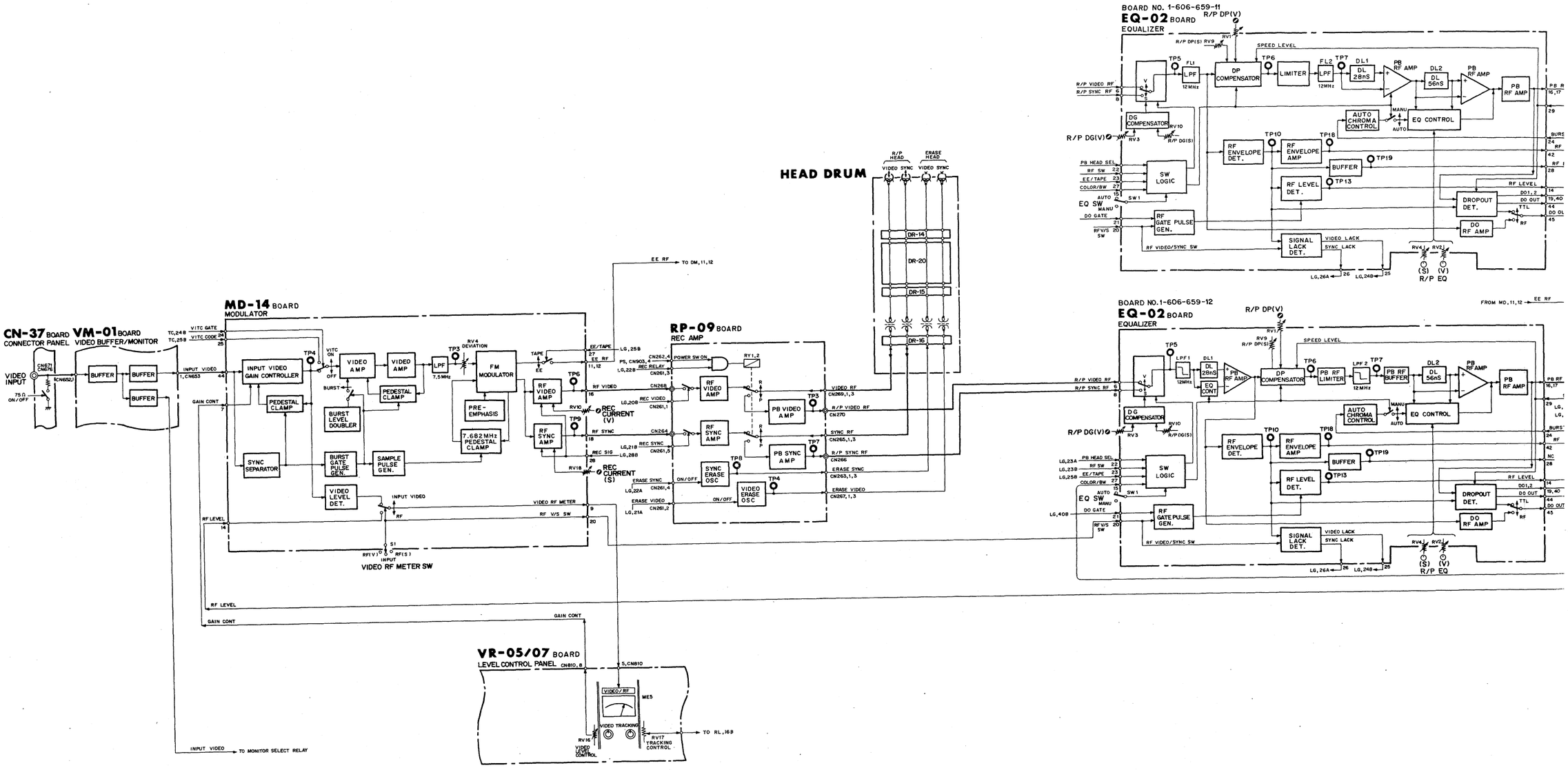

BOARD	NAME	FUNCTION
LG,	LG-02	VIDEO/AUDIO LOGIC
TC,	TC-14	TIME CODE GENERATOR/READER
RL,	RL-12	REEL SERVO
CD,	CD-17	CAPSTAN/DRUM SERVO
SR,	SR-15	SERVO REFERENCE SIGNAL GENERATOR
PS,		POWER SUPPLY

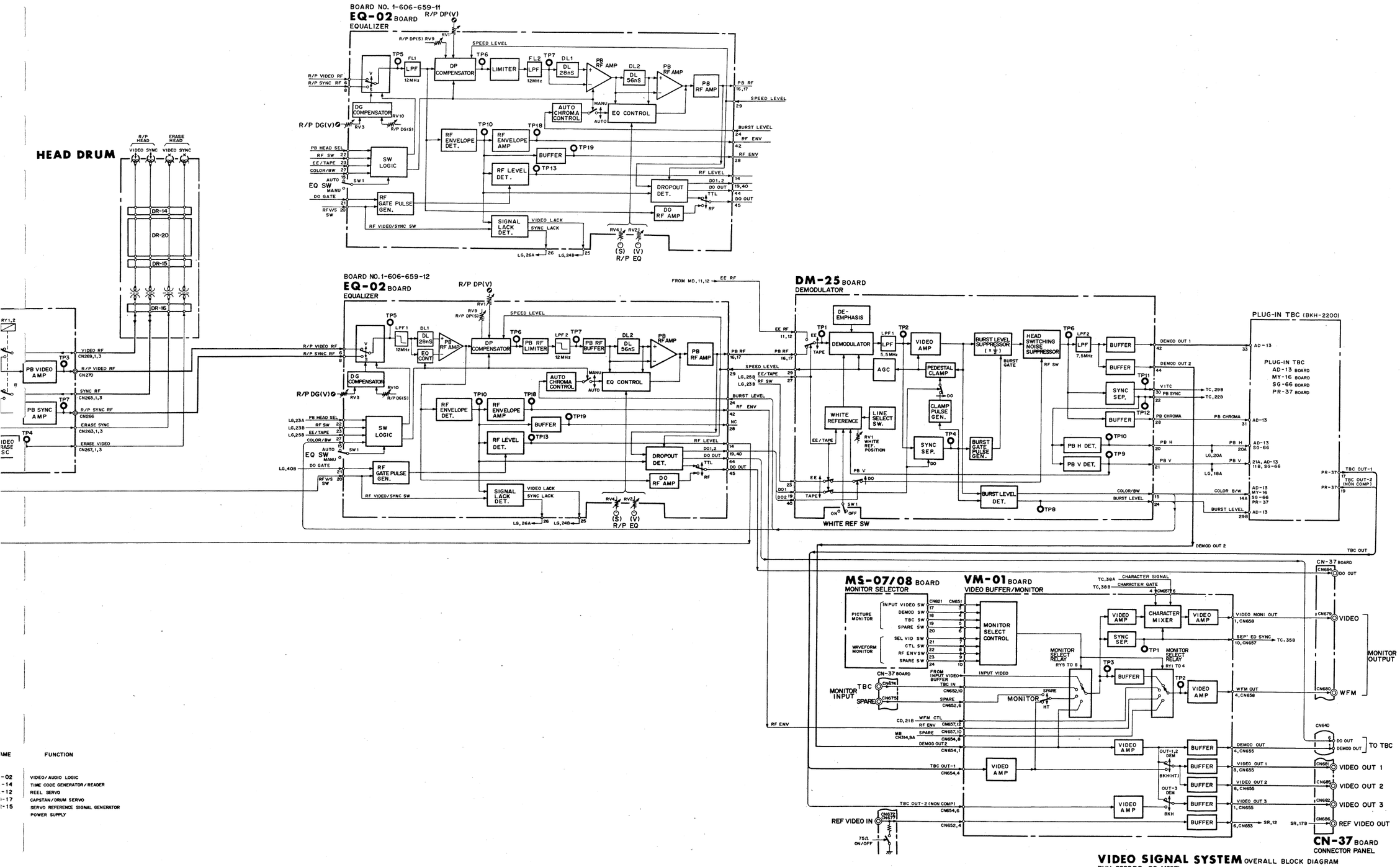

VIDEO SIGNAL SYSTEM OVERALL BLOCK DIAGRAM
BVH-2000PS 00 MODEL

NAME	FUNCTION
-02	VIDEO/AUDIO LOGIC
-14	TIME CODE GENERATOR/READER
-12	REEL SERVO
-17	CAPSTAN/DRUM SERVO
-15	SERVO REFERENCE SIGNAL GENERATOR
	POWER SUPPLY

MD-14 BOARD

Video Modulator

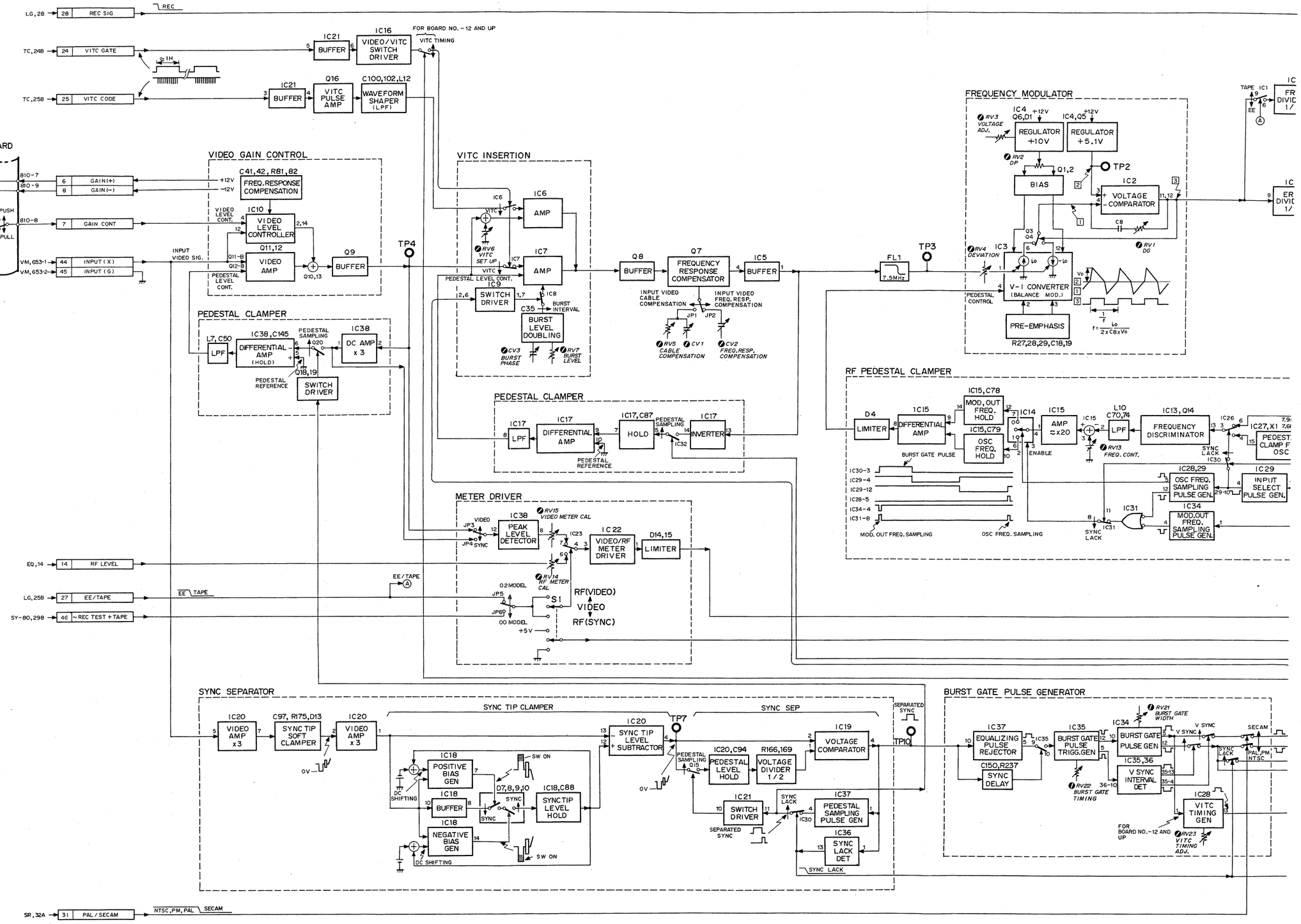

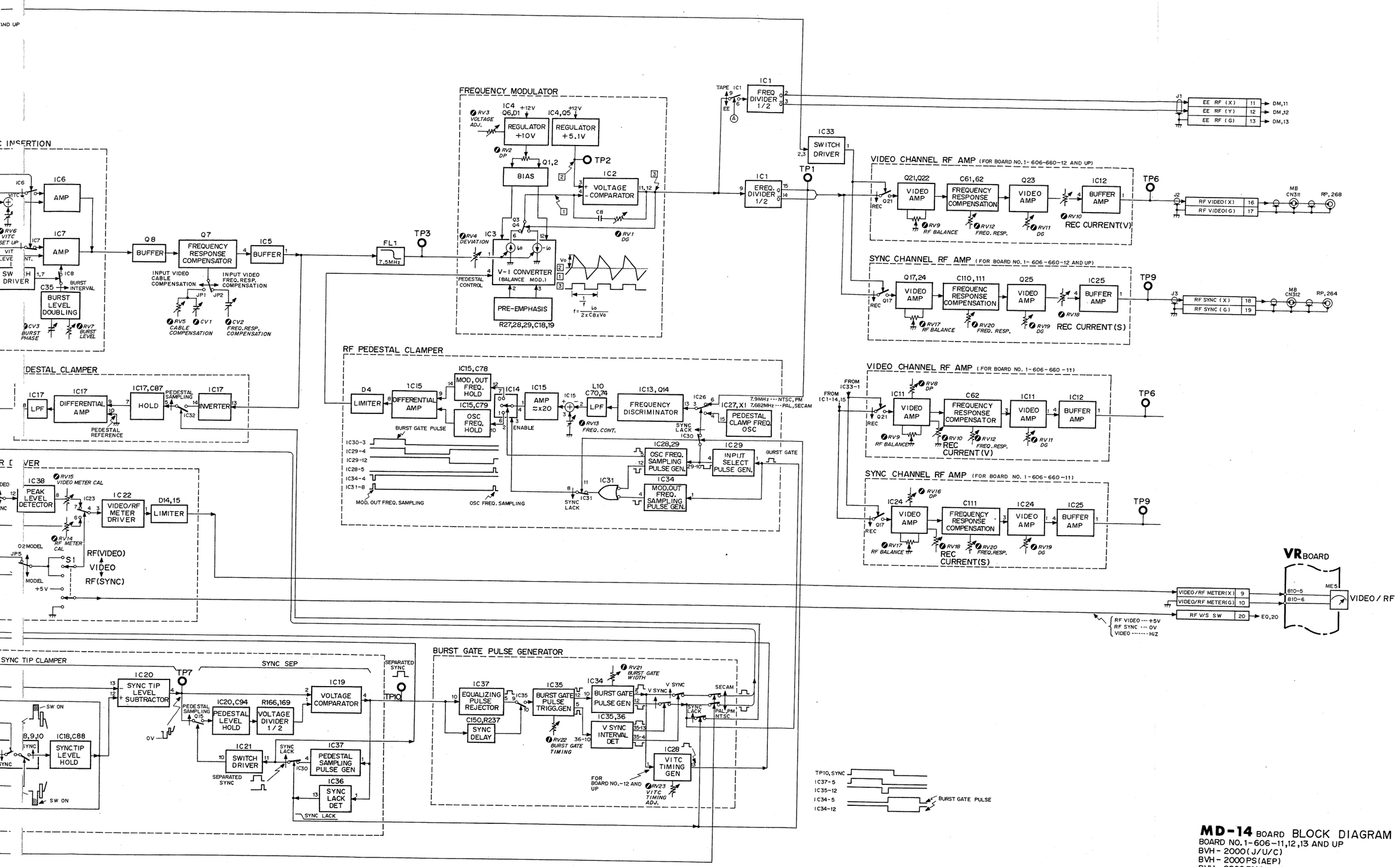

MD-14 BOARD BLOCK DIAGRAM
BOARD NO. 1-606-11,12,13 AND UP
BVH-2000(J/U/C)
BVH-2000PS(AEP)
BVH-2000PM(BRZ)

EQ-02 BOARD

Video/Sync PB Equalizer

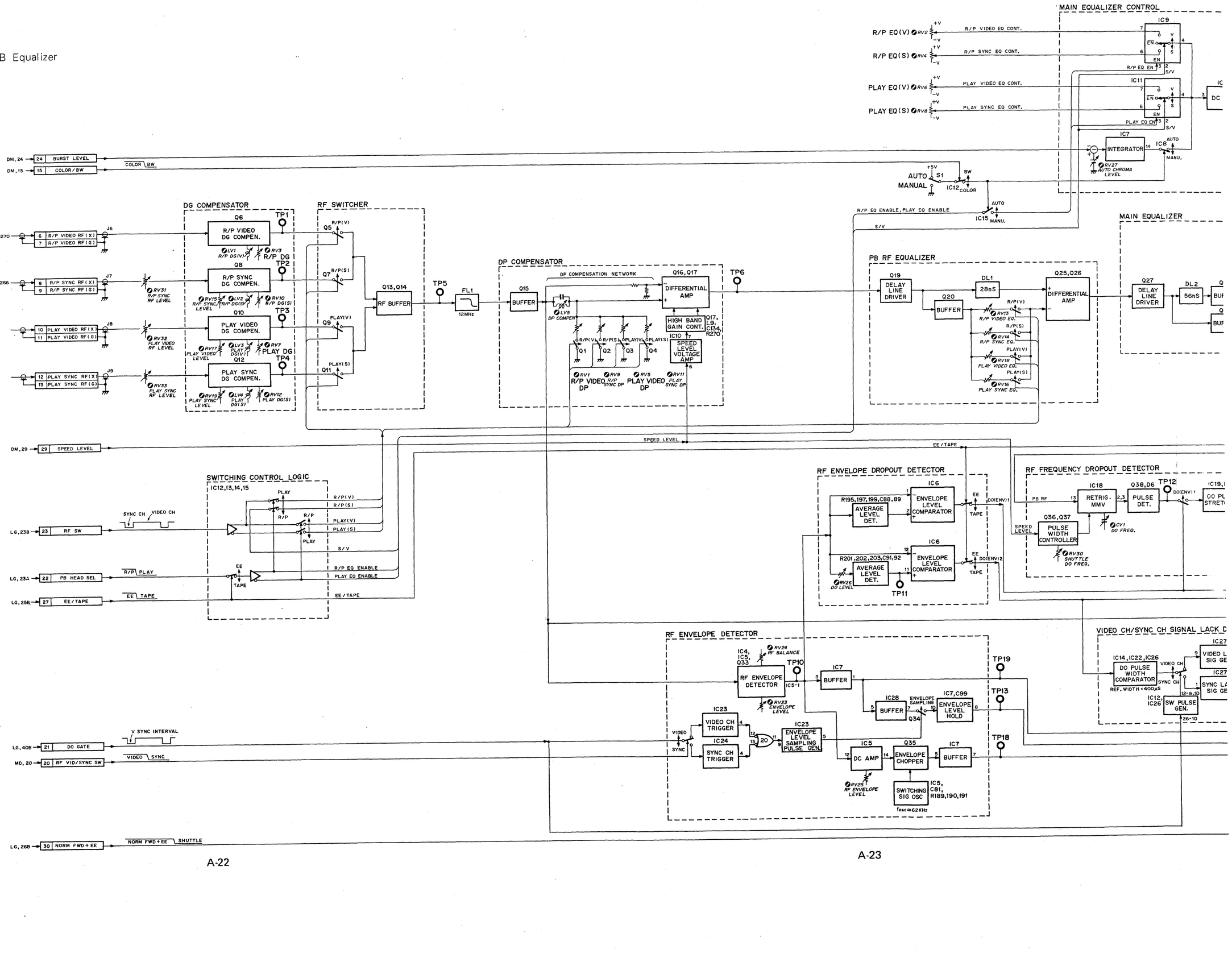

MAIN EQUALIZER CONTROL

R/P EQ(V) RV2 +V -V — R/P VIDEO EQ CONT.
R/P EQ(S) RV4 +V -V — R/P SYNC EQ CONT.
PLAY EQ(V) RV6 +V -V — PLAY VIDEO EQ CONT.
PLAY EQ(S) RV8 +V -V — PLAY SYNC EQ CONT.

IC9 (V/S, EN) — R/P EQ EN — S/V
IC11 (V/S, EN) — PLAY EQ EN — S/V
IC10 DC AMP → D3,D4 CLIPPER
IC7 INTEGRATOR ← IC8 AUTO / MANU.
RV27 AUTO CHROMA LEVEL

AUTO / MANUAL S1 +5V
IC12 BW / COLOR
R/P EQ ENABLE, PLAY EQ ENABLE
IC15 AUTO / MANU.
S/V

MAIN EQUALIZER

IC2 MULTIPLIER (K CONT., +OUT, -OUT)
Q27 DELAY LINE DRIVER — DL2 56nS — Q29 BUFFER — Q28 BUFFER
Q30,Q31 DIFFERENTIAL AMP (+OUT, -OUT)
RV21 RF EQ CONT
TP8
+12V
RV35 LIMITER BALANCE
IC3 PB RF LIMITER (+OUT, -OUT)
EE / TAPE

PB RF EQUALIZER

Q19 DELAY LINE DRIVER — DL1 28nS — Q25,Q26 DIFFERENTIAL AMP
Q20 BUFFER
R/P(V) RV13 R/P VIDEO EQ.
R/P(S) RV14 R/P SYNC EQ.
PLAY(V) RV15 PLAY VIDEO EQ.
PLAY(S) RV16 PLAY SYNC EQ.

TP6
Q15 BUFFER
DP COMPENSATOR
DP COMPENSATION NETWORK
Q16,Q17 DIFFERENTIAL AMP
LV5 DP COMPEN
HIGH BAND GAIN CONT. Q17, L9, C134, R270
IC10 SPEED LEVEL VOLTAGE AMP
Q1 R/P(V) Q2 R/P(S) Q3 PLAY(V) Q4 PLAY(S)
RV1 R/P VIDEO DP — RV9 R/P SYNC DP — RV5 PLAY VIDEO DP — RV11 PLAY SYNC DP

SPEED LEVEL
EE / TAPE

RF ENVELOPE DROPOUT DETECTOR

IC6 ENVELOPE LEVEL COMPARATOR — AVERAGE LEVEL DET. R195,197,199,C88,89 — EE / TAPE — DO(ENV)1
IC6 ENVELOPE LEVEL COMPARATOR — AVERAGE LEVEL DET. R201,202,203,C91,92 — RV26 DO LEVEL — TP11 — EE / TAPE — DO(ENV)2

RF FREQUENCY DROPOUT DETECTOR

PB RF → IC18 RETRIG. MMV → Q38,D6 PULSE DET. → TP12 DO(ENV)1 → IC19,IC20 DO PULSE STRETCHER → DO(FR)
Q36,Q37 PULSE WIDTH CONTROLLER ← SPEED LEVEL
RV30 SHUTTLE DO FREQ.
CV1 DO FREQ.
IC22 EE / TAPE

TP15 DO(FR)+DO(ENV)2
TP14 DO(FR)+DO(ENV)1
TP17 DO(FR)+DO(ENV)2
TP16 DO(FR)+DO(ENV)2

SHUTTLE — IC22 — NORM. FWD + EE
JP2 TTL / JP1 RF

Q32 DO RF AMP
RV22 DO RF LEVEL

RF ENVELOPE DETECTOR

IC4, IC5, Q33 RF ENVELOPE DETECTOR — RV24 RF BALANCE — RV23 ENVELOPE LEVEL — TP10 — IC5-1
IC7 BUFFER — TP19
IC28 BUFFER — ENVELOPE SAMPLING Q34 — IC7,C99 ENVELOPE LEVEL HOLD — TP13
IC23 VIDEO CH TRIGGER
IC24 SYNC CH TRIGGER
VIDEO / SYNC
IC23 20 ENVELOPE LEVEL SAMPLING PULSE GEN.
IC5 DC AMP — Q35 ENVELOPE CHOPPER — IC7 BUFFER — TP18
RV25 RF ENVELOPE LEVEL
IC5, C81, R189,190,191 SWITCHING SIG OSC — fosc≈62KHz

VIDEO CH/SYNC CH SIGNAL LACK DETECTOR

IC14,IC22,IC26 DO PULSE WIDTH COMPARATOR — REF. WIDTH = 400μS
VIDEO CH / SYNC CH
IC27 VIDEO LACK SIG GEN.
IC27 SYNC LACK SIG GEN.
IC12, IC26 SW PULSE GEN. — 26-10

DO SIG OUT 45 → CN684 DO SIG (CN PANEL)
TTL / RF — DO

DROPOUT (TBC) 44 → TO TBC CN640-6
DROPOUT-1 19 → DM,19
DROPOUT-2 40 → DM,40 / AD,27B
VIDEO LACK 25 → LG,24B
SYNC LACK 26 → LG,26A
RF ENVELOPE 28 → DT,28A
RF LEVEL 14 → MD,14
RF ENVELOPE (X) 42 / RF ENVELOPE (G) 43 → VM,657-10
PB RF (X) 16 → DM,16
PB RF (Y) 17 → DM,17
GND 18 → DM,18

EQ-02 BOARD BLOCK DIAGRAM
BOARD NO. 1-606-659-11
BVH-2000 (J/U/C)
BVH-2000PS (AEP)
BVH-2000PM (BRZ)

EQ-02 BOARD

Video/Sync PB Equalizer

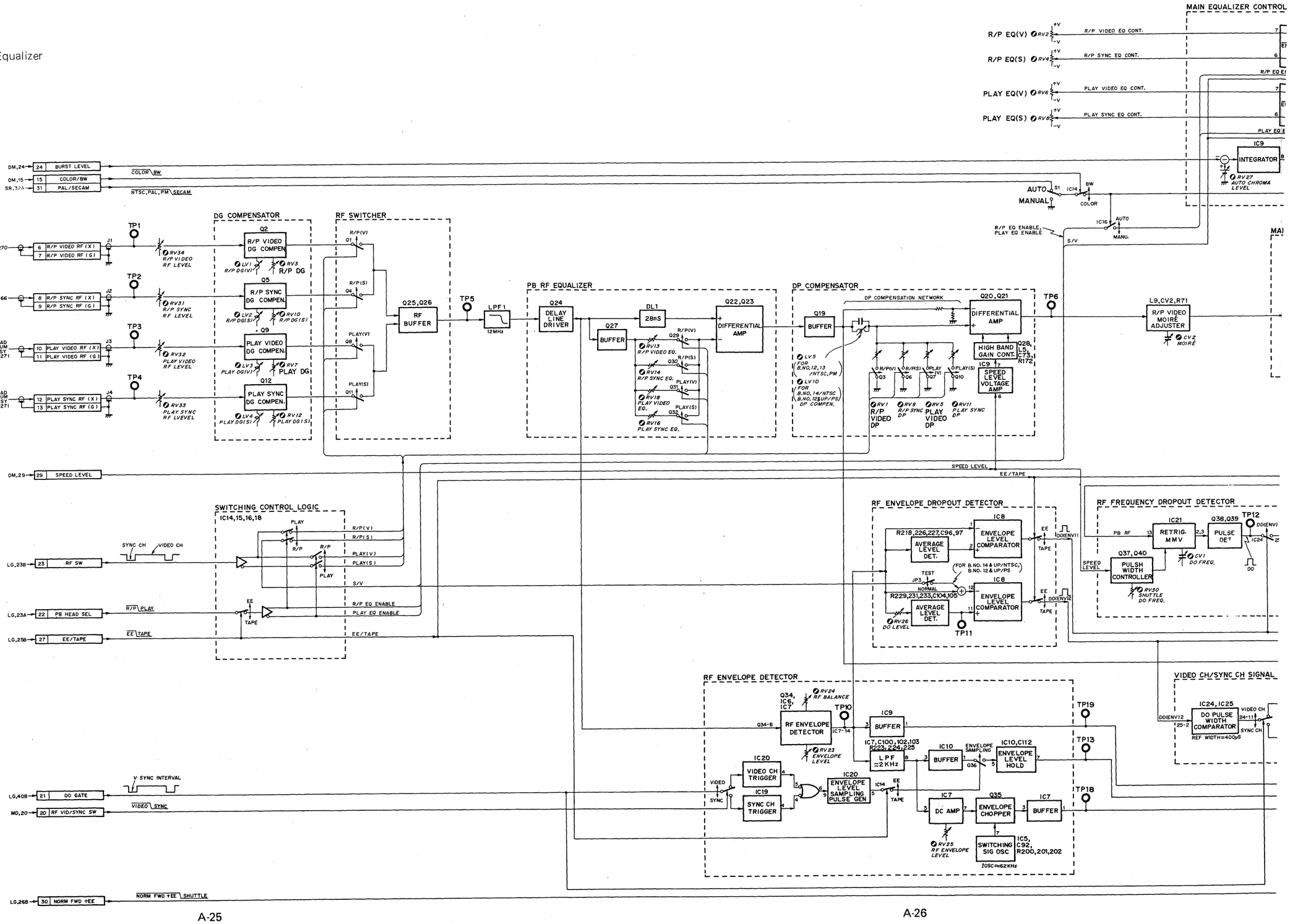

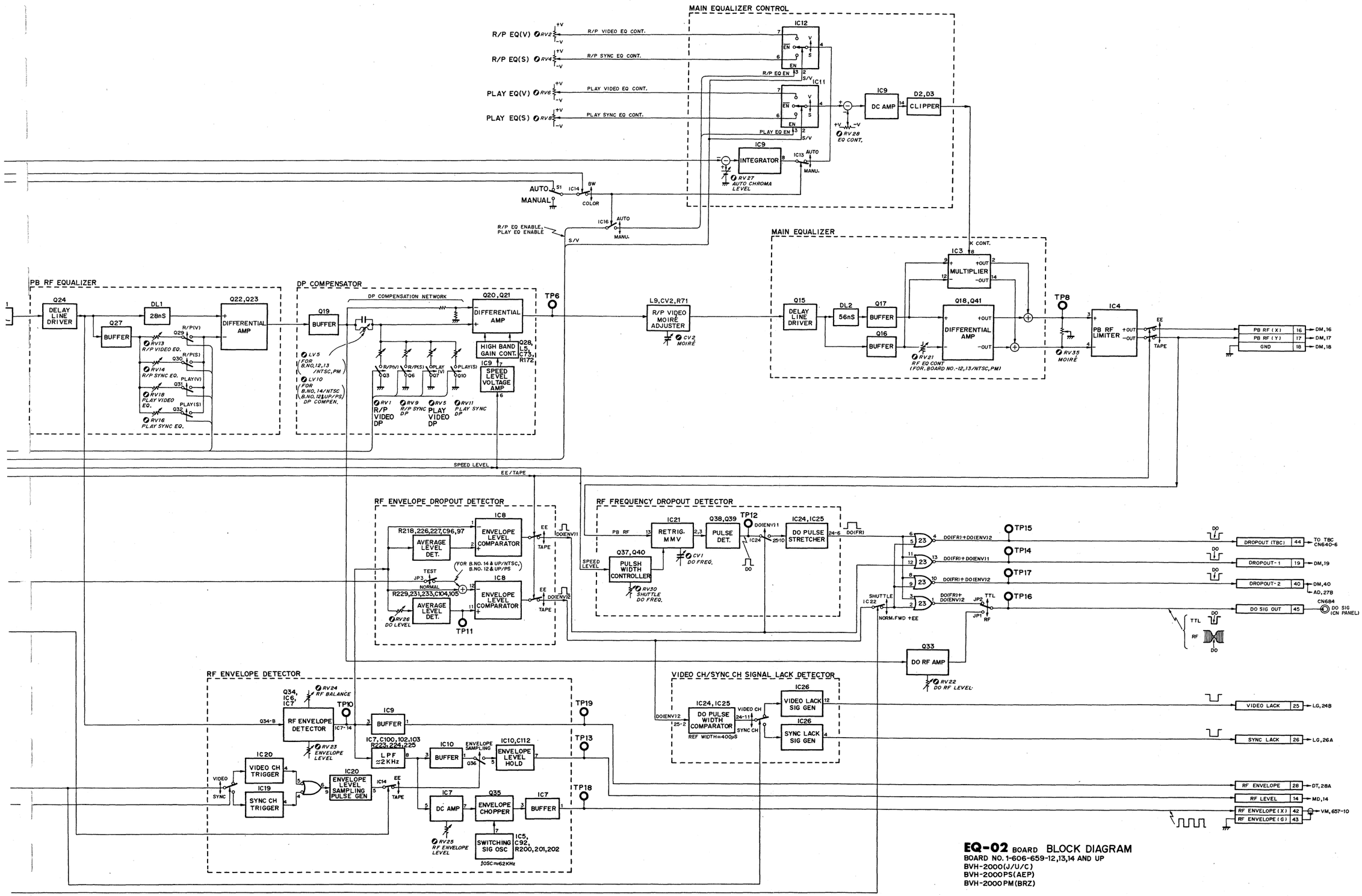

EQ-02 BOARD BLOCK DIAGRAM
BOARD NO. 1-606-659-12,13,14 AND UP
BVH-2000(J/U/C)
BVH-2000PS(AEP)
BVH-2000PM(BRZ)

DM-25 BOARD

Video Demodulator

EQ,16 — 16 PB RF (X)
EQ,17 — 17 PB RF (Y)
EQ,18 — 18 GND

MD,11 — 11 EE RF (X)
MD,12 — 12 EE RF (Y)
MD,13 — 13 GND

IC6 ECL TO TTL (10/9 → 7)
IC6 ECL TO TTL (13/12 → 14)
IC5 TAPE / EE → TP1
IC5 WHITE REFERENCE ON
IC2 X1 WHITE REFERENCE SIG. OSC — NTSC, PM 10MHz PAL, SECAM 8.9MHz
OSC ON
IC2

INSERTION LINE SELECTION BY SW1 AND SW2A

SW1	ON CHANNEL OF SW2A	INSERTION LINE NTSC	INSERTION LINE PAL/SECAM	INSERTION LINE PAL-M
ON	1	10,11	6, 7,319,320	7, 8,270,271
	2	12,13	8, 9,321,322	9,10,272,273
	3	14,15	10,11,323,324	11,12,274,275
	4	16,17	12,13,325,326	13,14,276,277
	5	18,19	14,15,327,328	15,16,278,279
	6	20,21	16,17,329,330	17,18,280,281
	7	22,23	18,19,331,332	19,20,282,283
	8	24,25	20,21,333,334	21,22,284,285
OFF	Don't care.	Not Inserted		

WHITE REFERENCE INSERTION LINE SELECTOR

* REFER TO THE ABOVE TABLE FOR THE SW2A SETTING.

WHITE REFERENCE ON/OFF SW1 (+5V)
IC2E WHITE REFERENCE "ON" SIG. GEN. (11 LATCH, 12, 9 ON, TAPE, EE)
LINE SELECTOR
* SW2A
IC2B (4,3,2,1,15,14,13,12 → 5 → 6)
2H UNIT ON OFF
INSERTION, INH (9,10,11)
H SYNC ENABLE → 7
16H ENABLE
PBV
IC4B INSERTION START SIG GEN.
RV1 WHITE REF. INSERTION START LINE SET.
IC2D COUNT ENABLE SIG GEN.
IC2C SWITCH CONTROL SIG GEN. (16 COUNTER) 11,12 COUNT END 15 — 3-BIT BINARY DATA
IC3A COUNT END
IC3A INSERTION ENABLE SIG. TRIGGER (4, 12, 6,7)
IC3A INSERTION ENABLE SIG. GEN. (10, ON)
RV12 WHITE REFERENCE WIDTH
H SYNC, ENABLE

LG,26B — 26 NORM FWD + EE
SR,32A — 31 PAL / SECAM
→ TO BURST LEVEL/NOISE SUPPRESSOR
LG, 25B — 27 EE / TAPE
EQ,19 — 19 DROPOUT-1
LG,23 — 23 RF SW
EQ,40 — 40 DROPOUT-2

CONTROL LOGIC
EE, TAPE
EE, TAPE

FM DEMODULATOR

IC4,Q3,Q4,Q5,Q6,Q15 FREQUENCY DISCRIMINATOR (Q3-2) — RV4 SECOND ORDER MOIRÉ — GAIN CONT. (PULSE WIDTH) CONT.
C60,R66 DE-EMPHASIS — RV7 LOW BAND FREQ. RESP.
IC1 BUFFER AMP (4 → 1)
LPF1 — NTSC, PM 4.5MHz PAL, SECAM 5.5MHz
IC4-13
SPEED LEVEL +8V / 0V / −8V — REV / FWD
IC3 AGC (7 → 6) — RV10 AGC LEVEL
TP5

TP1 — TP2

PEDESTAL CLAMPER

IC5D PEDESTAL SAMPLING PULSE GEN. (1 → 13)
DO1
IC3D SYNC LACK DET (2 → 13)
SYNC LACK
Q9,Q10 SWITCH DRIVER
L10,C110 LPF (7)
IC11 INTEGRATOR (6, 5, Q11)
PEDESTAL SAMPLING
IC11 SUBTRACTOR (1, 2, 3)
RV5 PEDESTAL CLAMP LEVEL

FOR BOARD NO. 1-606-661-11, 12
IC12 VIDEO AMP (1, 8 → 1, 4) — RV7 LOW BAND FREQ. RESP.
IC13 VIDEO AMP (1, 4) — RV8 VIDEO GAIN — CV1 HIGH BAND FREQ. RESP.

FOR BOARD NO. 1-606-661-13 AND UP
IC12 VIDEO AMP (1, 8 → 1, 4) — PEDESTAL CONTROL — RV6 HIGH BAND FREQ. RESP.
IC13 VIDEO AMP (1, 4) — RV8 VIDEO GAIN — RV14 FREQ. RESP.

SYNC SEPARATOR

IC3F VIDEO AMP x3 (10, 8 → 5)
IC3F SYNC CH/DO INTERVAL DC SHIFTER (7, 2 → 1) — DO1 — RF SW
IC3F INVERTING AMP x3
SYNC TIP CLAMPER
IC2F POSITIVE BIAS GEN. — SW ON — DC SHIFTING
IC2F BUFFER (10, 8)
D2,3,4,5 SYNC SYNC
IC2F,C24 SYNC TIP LEVEL HOLD (12, 14)
IC3F NEGATIVE BIAS GEN. (14) — DC SHIFTING — SW ON
IC2F SYNC TIP SUBTRACTOR (6, 5 → 7)
TP3 — 0V
SYNC SEP
IC1E VOLTAGE COMPARATOR (11, 12 → 9)
TP4 SEPARATED SYNC

PBH/PBV SYNC SEPARATOR (FOR BOARD NO. 1-606-661-13 AND UP)

IC4D,4E EQUALIZING PULSE DET. (4D-10, 4E-6) — WINDOW IC5B
IC4D EQUALIZING PULSE WINDOW GEN. — INH
IC5B INHIBIT SIGNAL GEN. (10, 13 → 6)
C40,R54 DELAY (2)
IC4B 3rd EQ PULSE WINDOW GEN. (13) — WINDOW
IC4A 3rd EQ PULSE GATE SIG. GEN. (5, 12) — GATE ON
IC4A PBV GEN. (13,4) — 3rd EQ PULSE
TP7
H SYNC DET
IC4D HALF H REJECTOR (10, 12) — V SYNC INTERVAL
PBH — BACK PORCH OR DO — IC1A
IC5A,5B BACK PORCH/DO GATE PULSE GEN. (5B-2, 5B-1) — DO2
H SYNC — IC3B
IC4C PBH GEN. (10 → 4)

PBH/PBV SYNC SEPARATOR (FOR BOARD NO. 1-606-661-11,12)

IC3,Q2,16,17 PULSE WIDTH CONTROLLER (3-2) — SPEED LEVEL — CONTROL VOLTAGE FOLLOWING THE TAPE SPEED
IC4D,4E EQUALIZING PULSE DET. (4D-10, 4E-6) — WINDOW
IC4D EQUALIZING PULSE WINDOW GEN. — INH
IC5B INHIBIT SIGNAL GEN. (10, 4 → 13)
C40,R DELAY (2)
IC4B 3rd EQ PULSE WINDOW GEN. (13) — WINDOW
IC4A 3rd EQ PULSE GATE SIG. GEN. (5, 12) — GATE ON
IC4A PBV GEN. (13,4) → PBV — 3rd EQ PULSE
FOR BOARD NO.-11 — H SYNC
FOR BOARD NO.-12 — H SYNC
H SYNC DET.
IC4D HALF H REJECTOR (10, 12) — V SYNC INTERVAL
BACK PORCH OR DO
IC3C,5B,14 BACK PORCH/DO GATE PULSE GEN. (3C-9, 3C-10 → 14-6,8) — DO 2
IC4C PBH GEN. (10 → 4) → PBH
IC3B — H SYNC

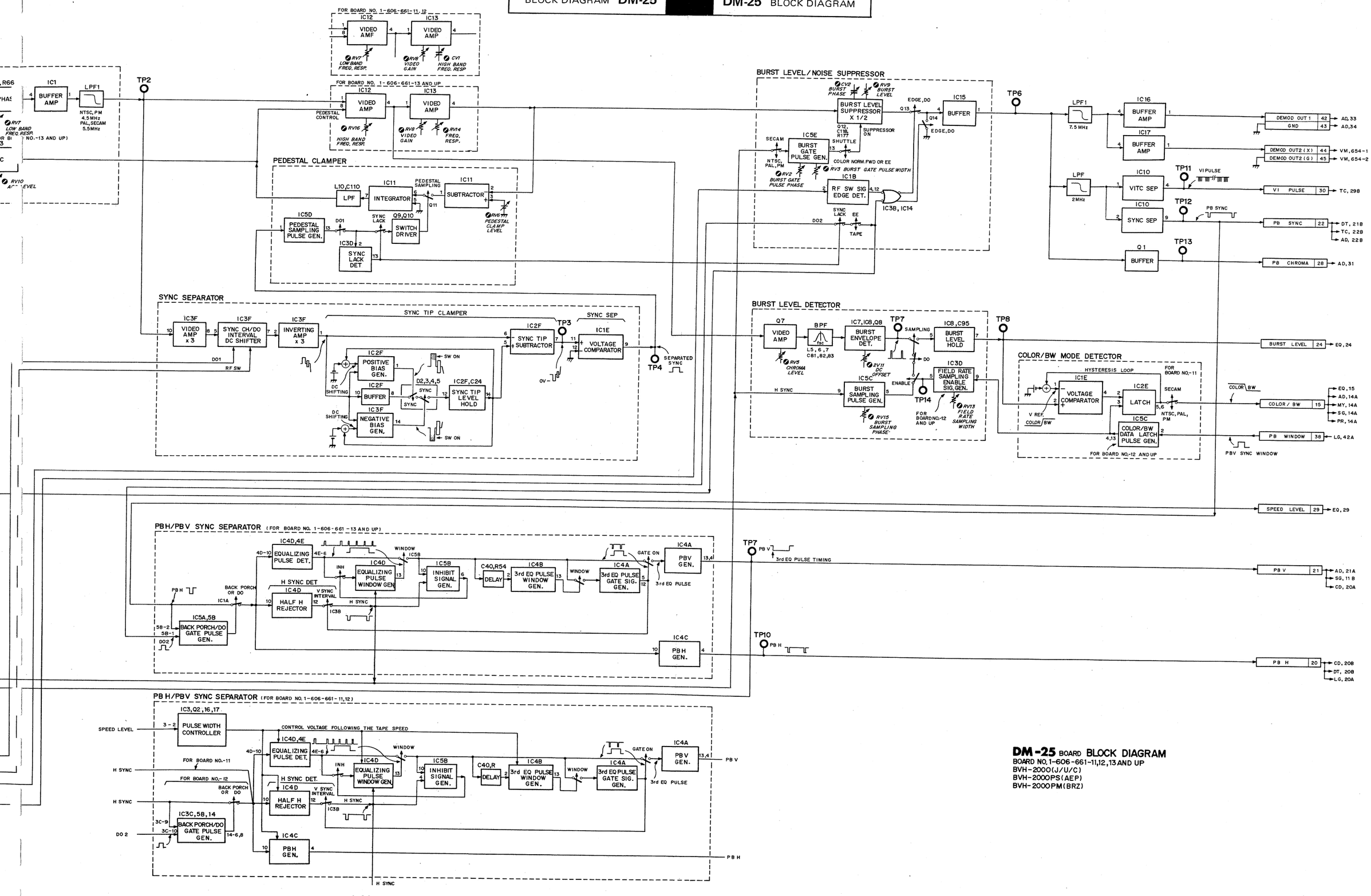

DM-25 BOARD BLOCK DIAGRAM
BOARD NO. 1-606-661-11, 12, 13 AND UP
BVH-2000(J/U/C)
BVH-2000PS(AEP)
BVH-2000PM(BRZ)

DT-05 BOARD; FOR 02/04 MODEL

DT Control

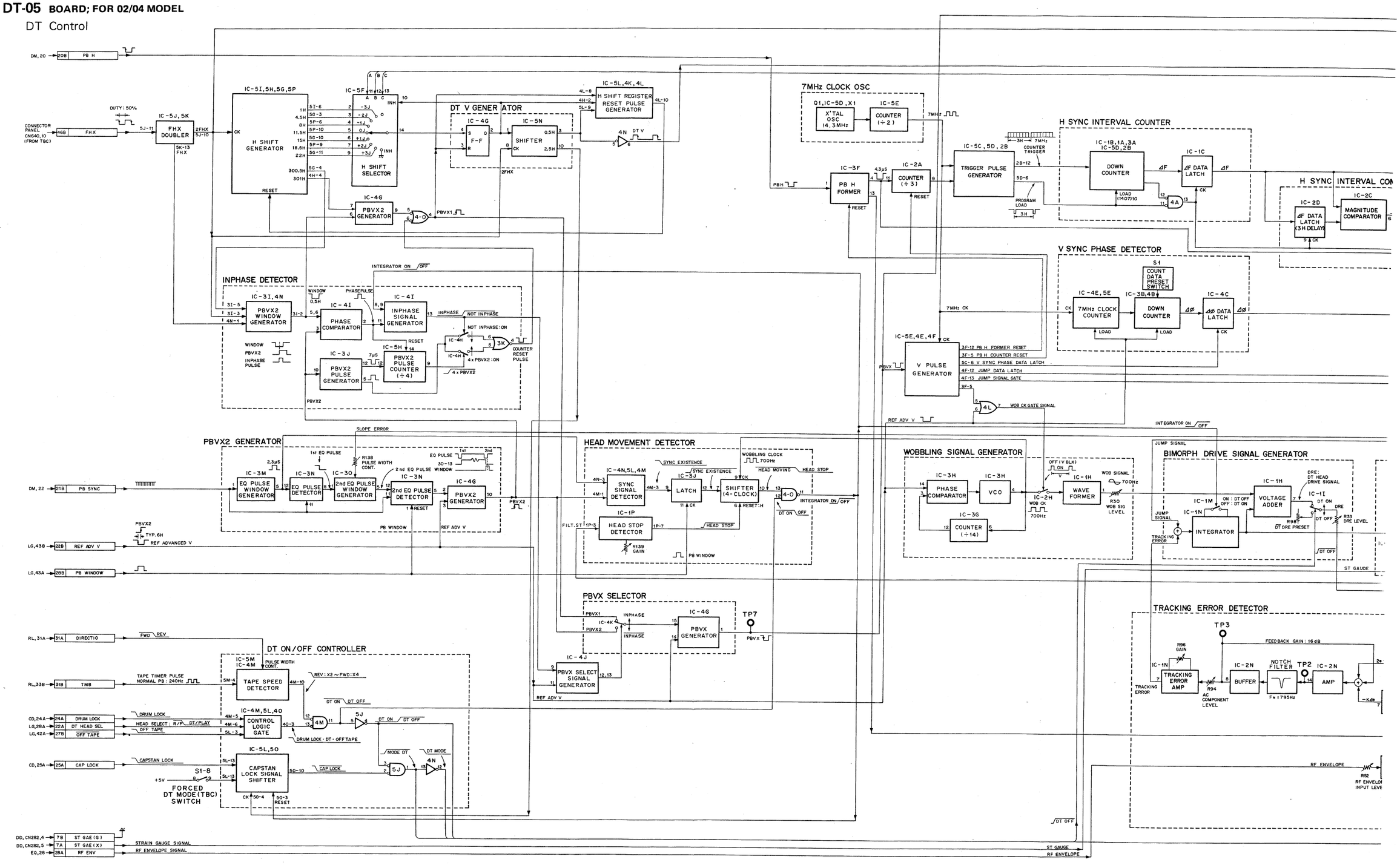

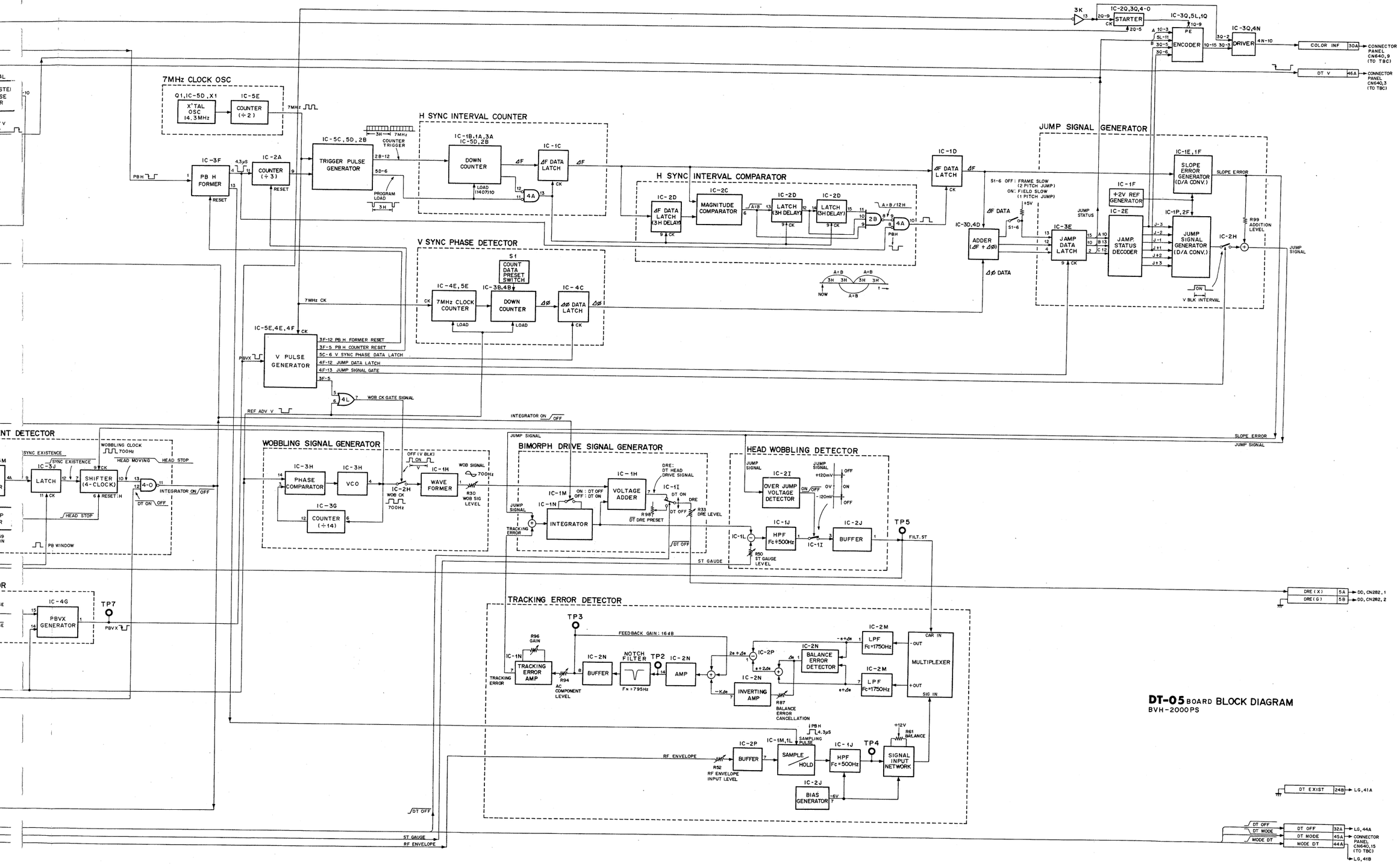

DT-05 BOARD BLOCK DIAGRAM
BVH-2000PS

SERVO SYSTEM OVERALL BLOCK DIAGRAM

SERVO SYSTEM OVERALL BLOCK DIAGRAM

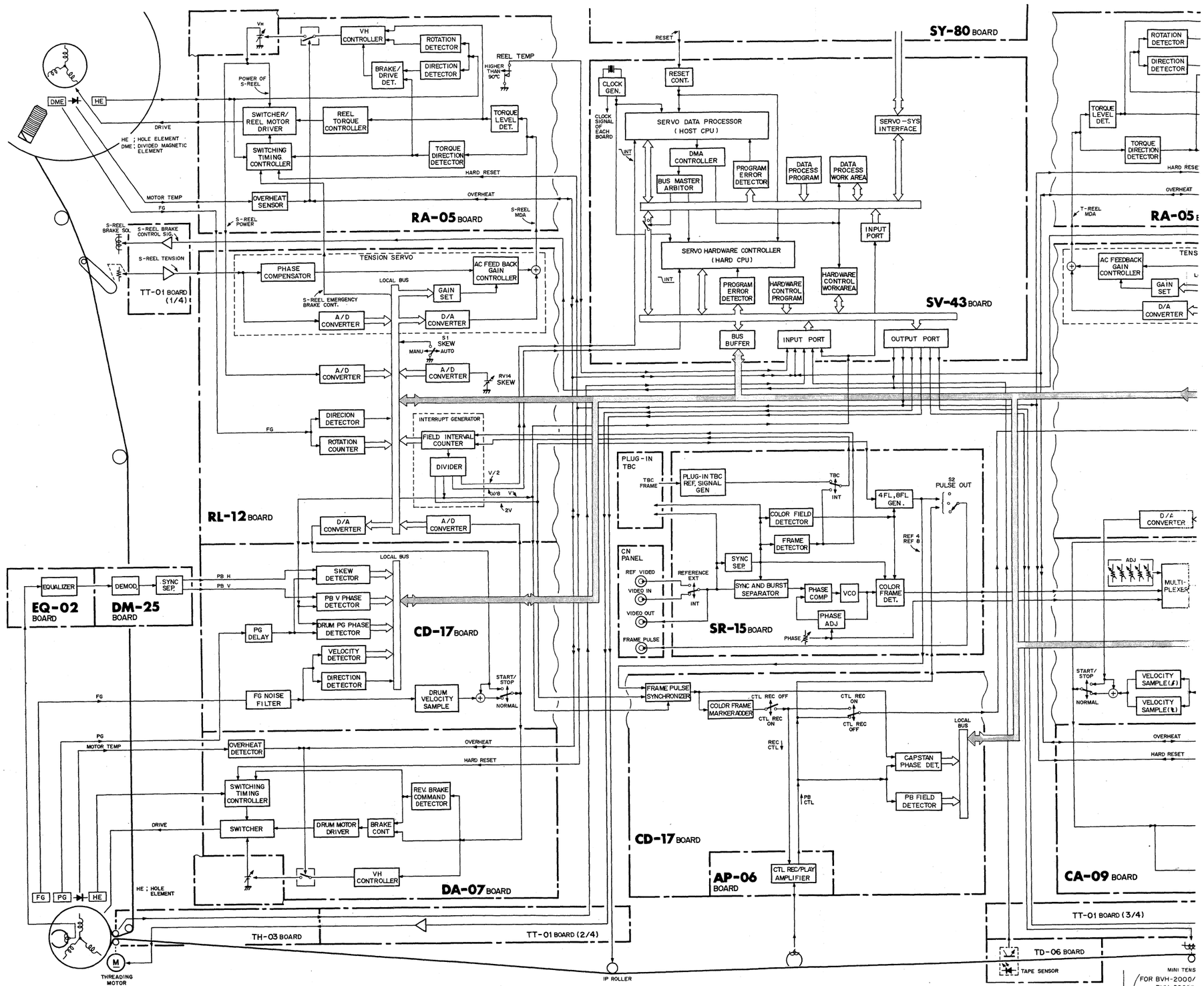

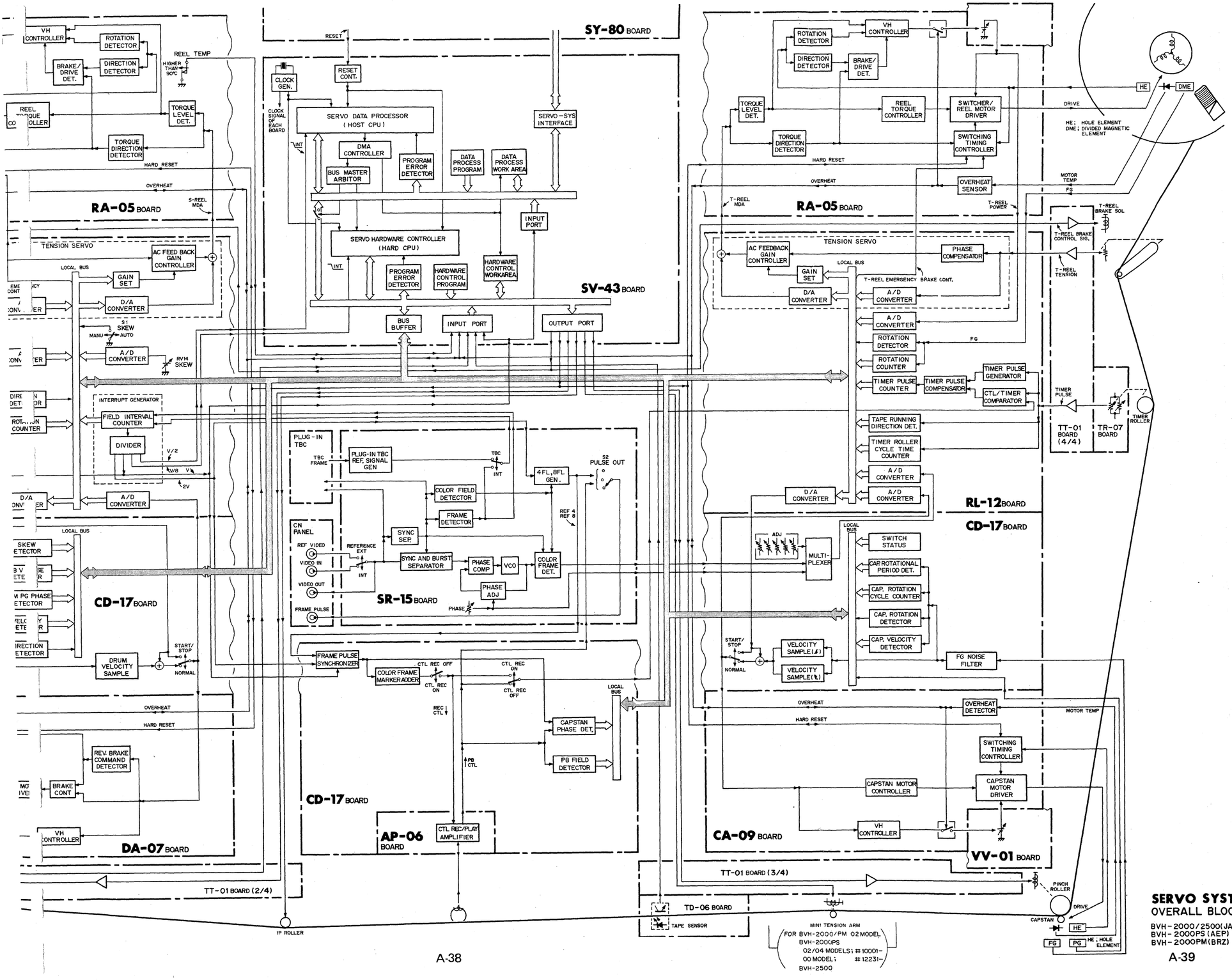

SERVO SYSTEM
OVERALL BLOCK DIAGRAM

BVH-2000/2500(JAPAN, US/CANADA)
BVH-2000PS(AEP)
BVH-2000PM(BRZ)

SV-43 BOARD

Servo CPU

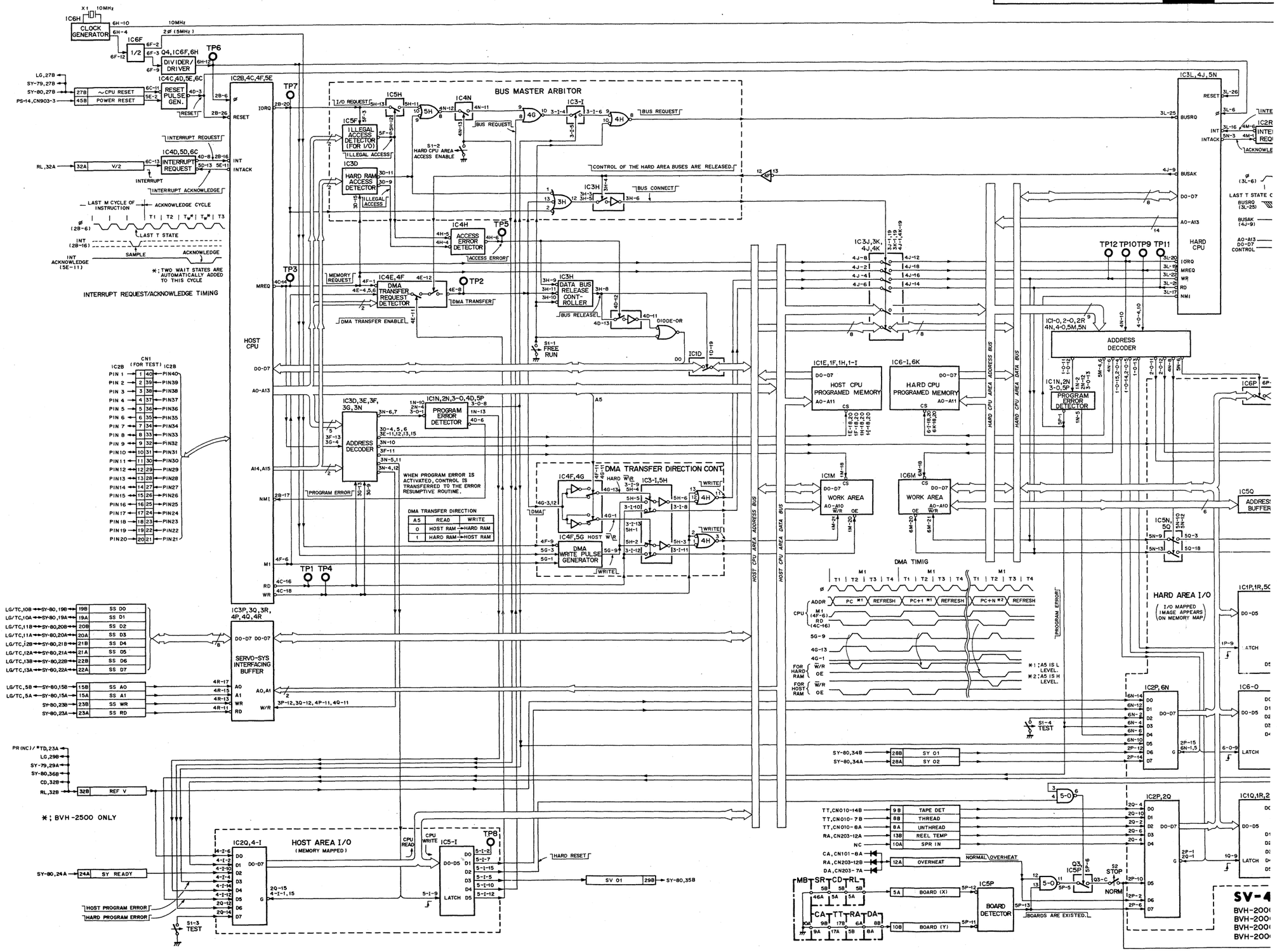

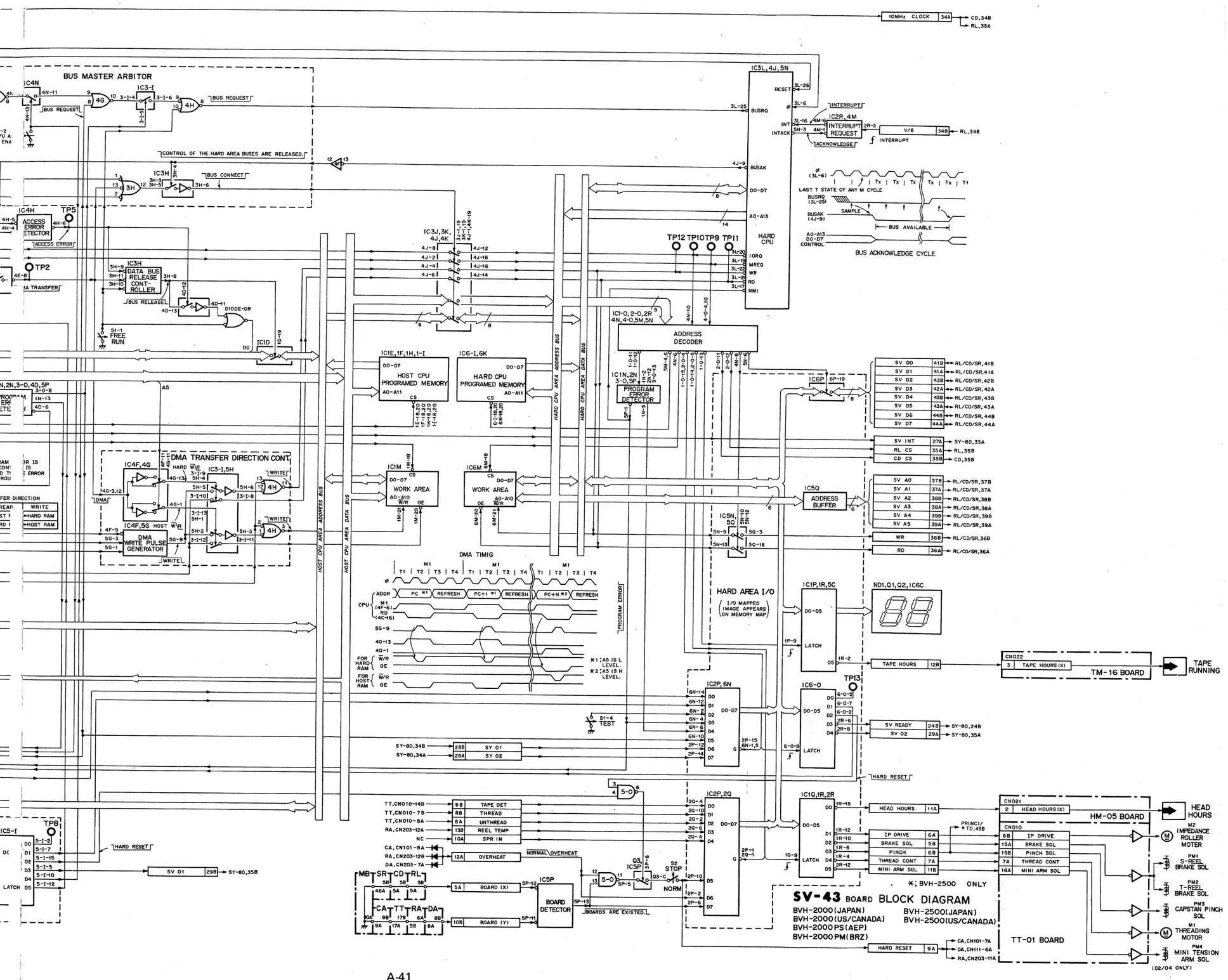
BUS MASTER ARBITOR
DMA TRANSFER DIRECTION CONT.
HARD AREA I/O
HARD CPU
ADDRESS DECODER
HOST CPU PROGRAMED MEMORY
HARD CPU PROGRAMED MEMORY
WORK AREA
DMA TIMIG
BUS ACKNOWLEDGE CYCLE
TM-16 BOARD
TAPE RUNNING
HM-05 BOARD
HEAD HOURS
TT-01 BOARD
BOARD DETECTOR
SV-43 BOARD BLOCK DIAGRAM
BVH-2000(JAPAN)
BVH-2000(US/CANADA)
BVH-2000PS(AEP)
BVH-2000PM(BRZ)
BVH-2500(JAPAN)
BVH-2500(US/CANADA)
*; BVH-2500 ONLY

RL-12 BOARD

Reel Servo

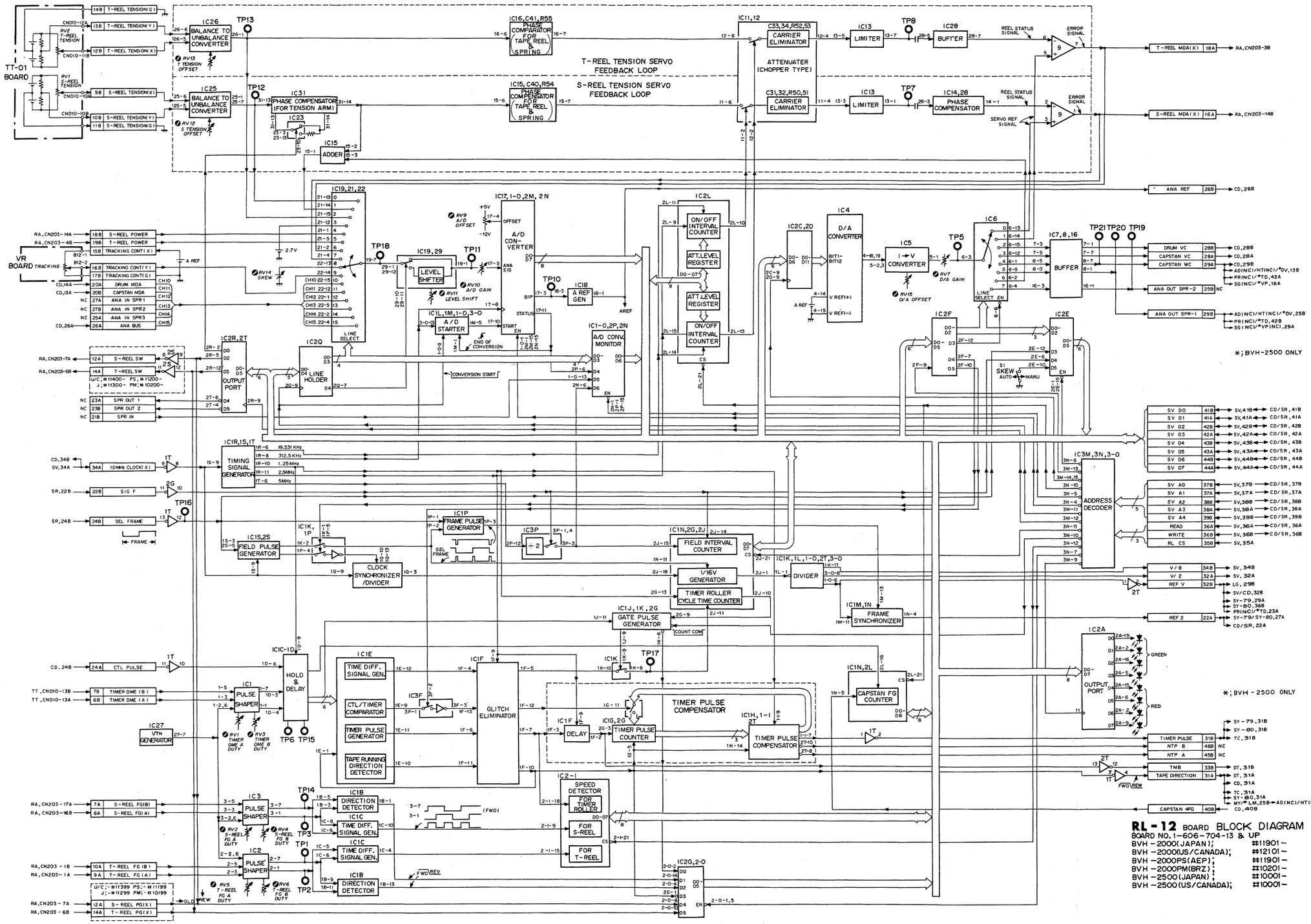

RL-12 BOARD BLOCK DIAGRAM

BOARD NO. 1-606-704-13 & UP

BVH-2000(JAPAN);	#11901-
BVH-2000(US/CANADA);	#12101-
BVH-2000PS(AEP);	#11901-
BVH-2000PM(BRZ);	#10201-
BVH-2500(JAPAN);	#10001-
BVH-2500(US/CANADA);	#10001-

CD-17 BOARD

Capstan/Drum Servo

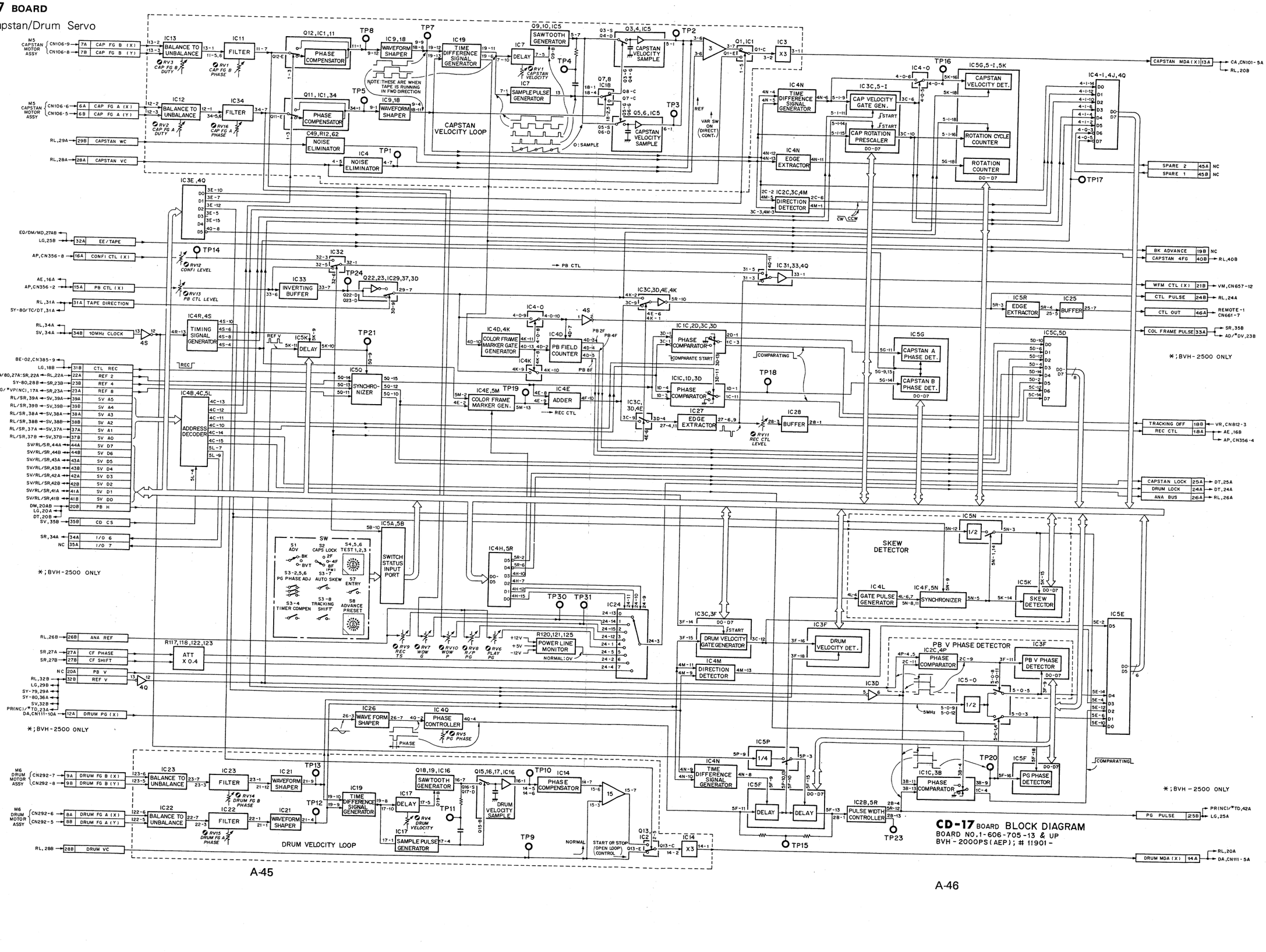

SR-15 BOARD

Servo Ref. Signal Generator

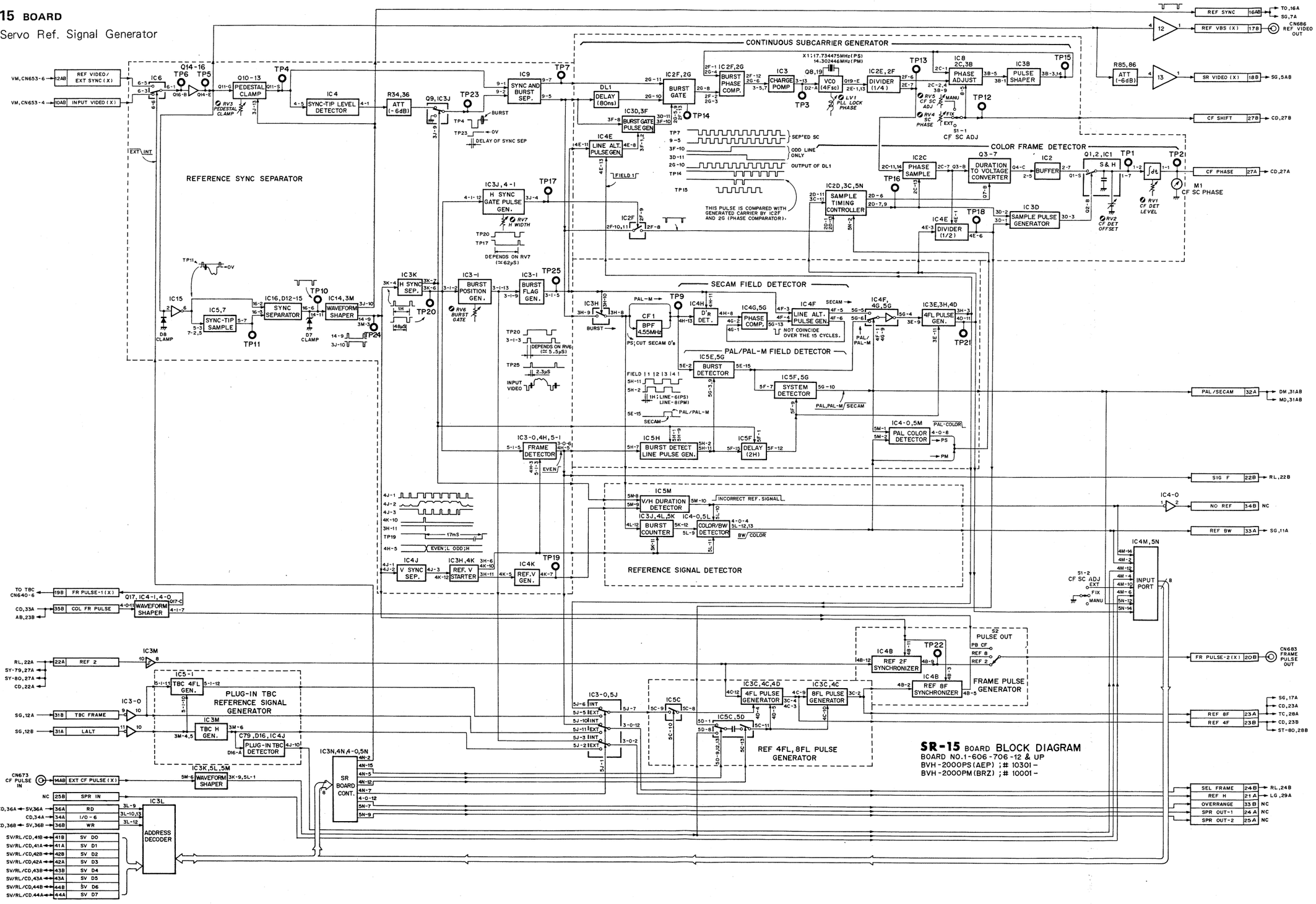

DA-07 BOARD

Drum Motor Driver

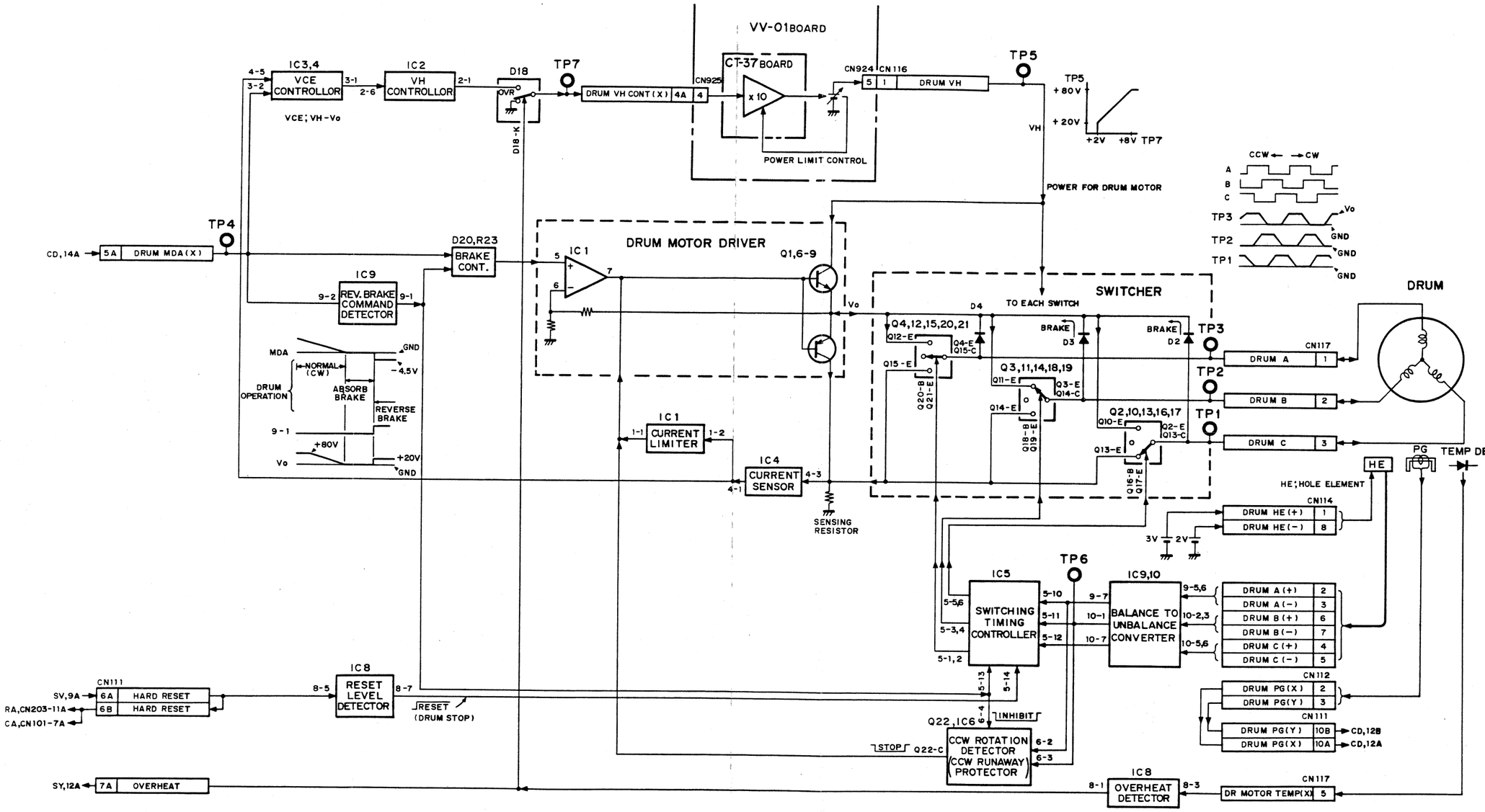

DA-07 BOARD BLOCK DIAGRAM

BVH-2000(JAPAN)
BVH-2000(US/CANADA)
BVH-2000PS(AEP)
BVH-2000PM(BRZ)
BVH-2500(JAPAN)
BVH-2500(US/CANADA)

CA-09 BOARD

Capstan Motor Driver

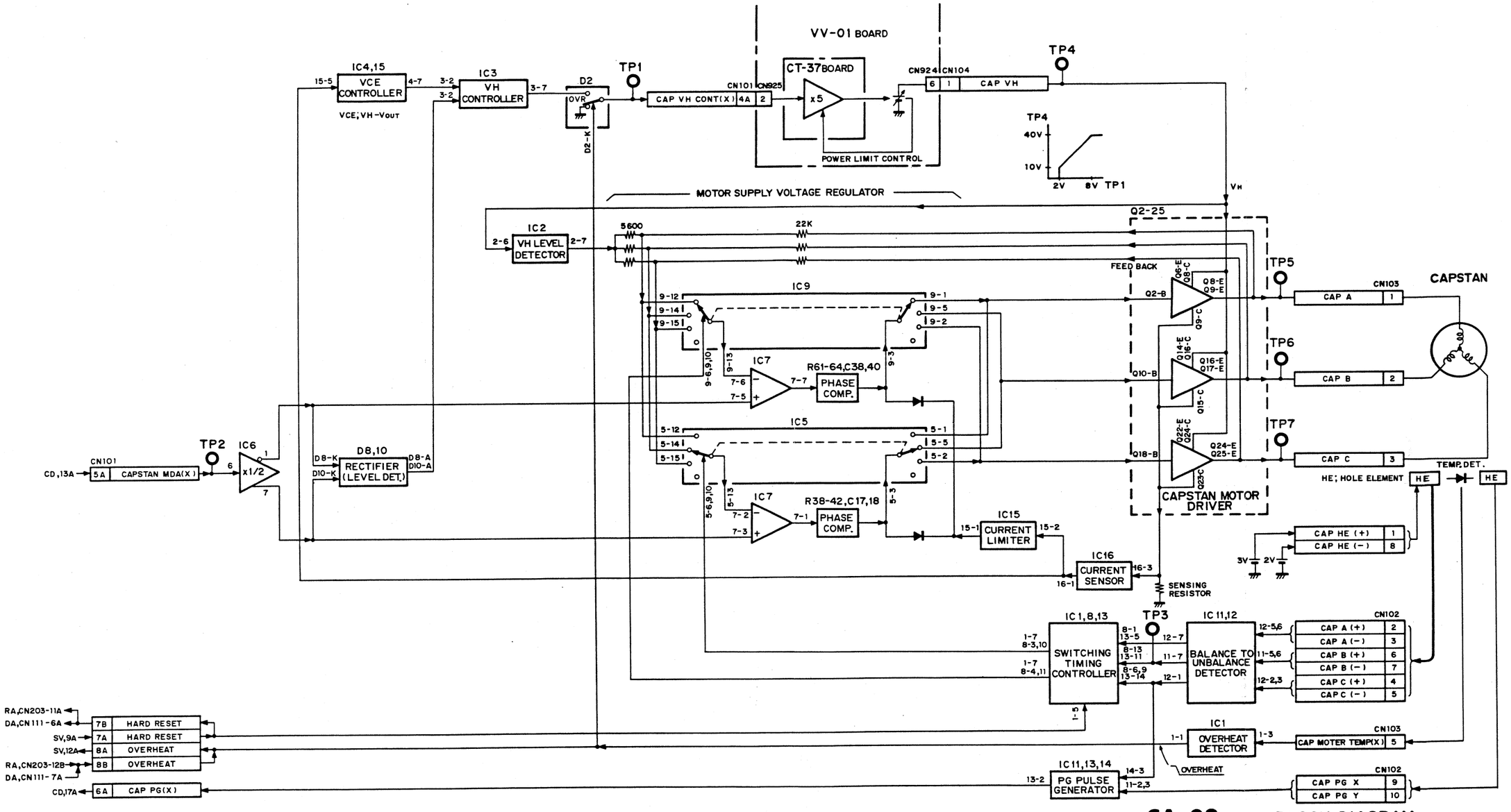

CA-09 BOARD BLOCK DIAGRAM

BVH-2000(JAPAN)
BVH-2000(US/CANADA)
BVH-2000PS(AEP)
BVH-2000PM(BRZ)
BVH-2500(JAPAN)
BVH-2500(US/CANADA)

RA-05 BOARD

Reel Motor Driver

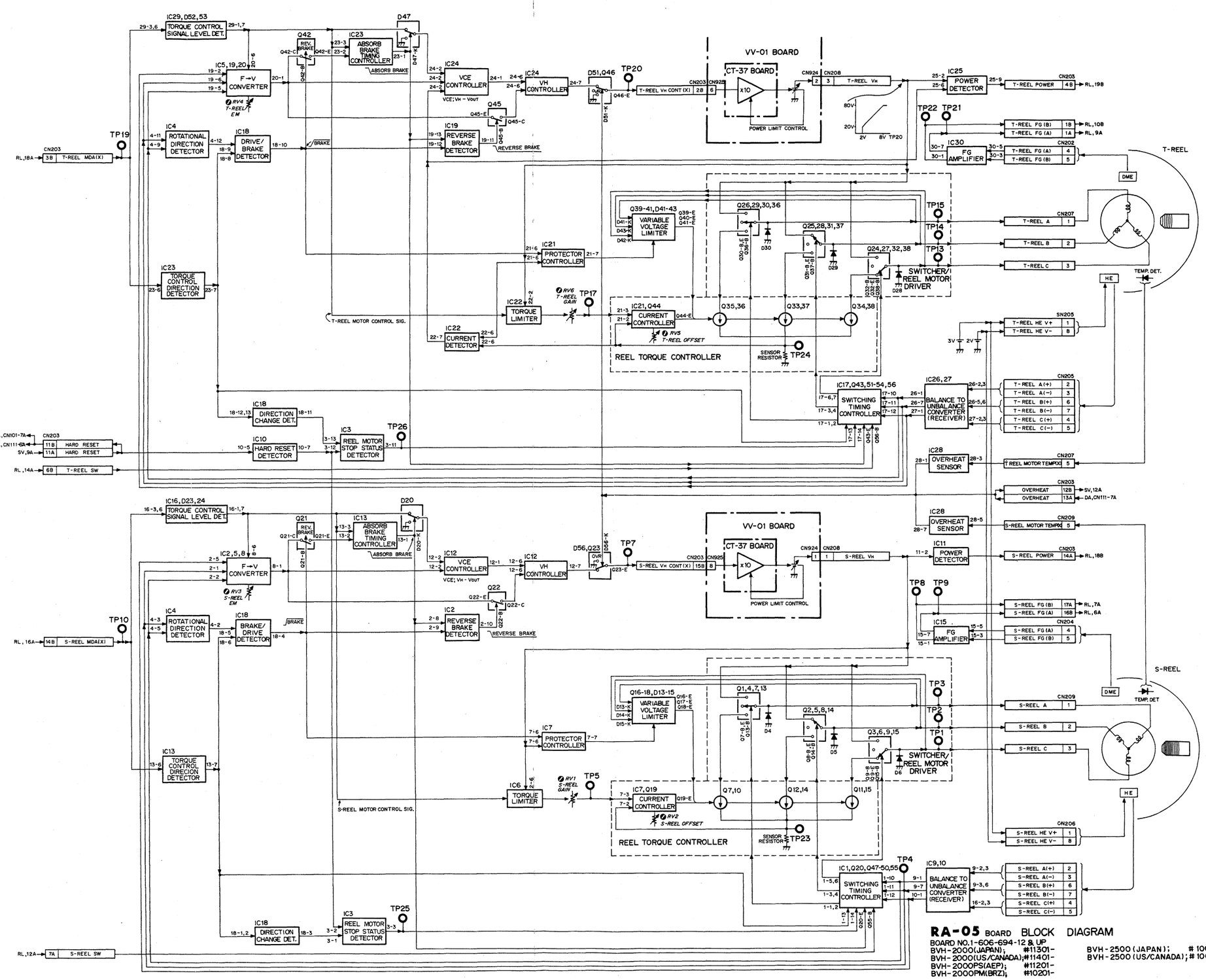

RA-05 BOARD BLOCK DIAGRAM

BOARD NO.1-606-694-12 & UP

BVH-2000(JAPAN); #11301-
BVH-2000(US/CANADA);#11401-
BVH-2000PS(AEP); #11201-
BVH-2000PM(BRZ); #10201-

BVH-2500(JAPAN); # 10001-
BVH-2500(US/CANADA); # 10001-

LG-02 BOARD
LG-02(A) BOARD

Logic

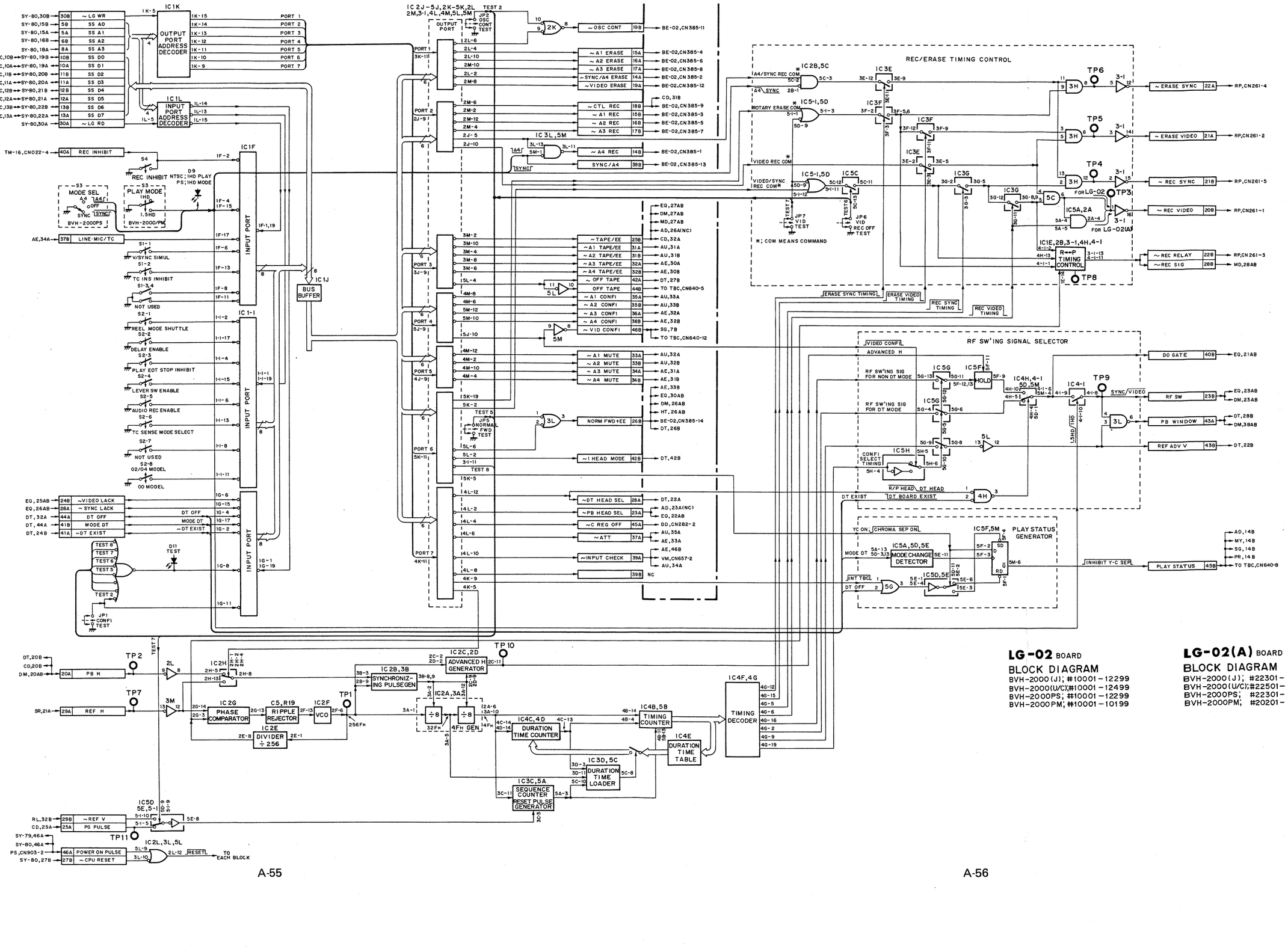

LG-02 BOARD
BLOCK DIAGRAM
BVH-2000(J); #10001 – 12299
BVH-2000(U/C);#10001 – 12499
BVH-2000PS; #10001 – 12299
BVH-2000PM; #10001 – 10199

LG-02(A) BOARD
BLOCK DIAGRAM
BVH-2000(J); #22301 –
BVH-2000(U/C);#22501 –
BVH-2000PS; #22301 –
BVH-2000PM; #20201 –

SY-79 BOARD

System Control CPU-1

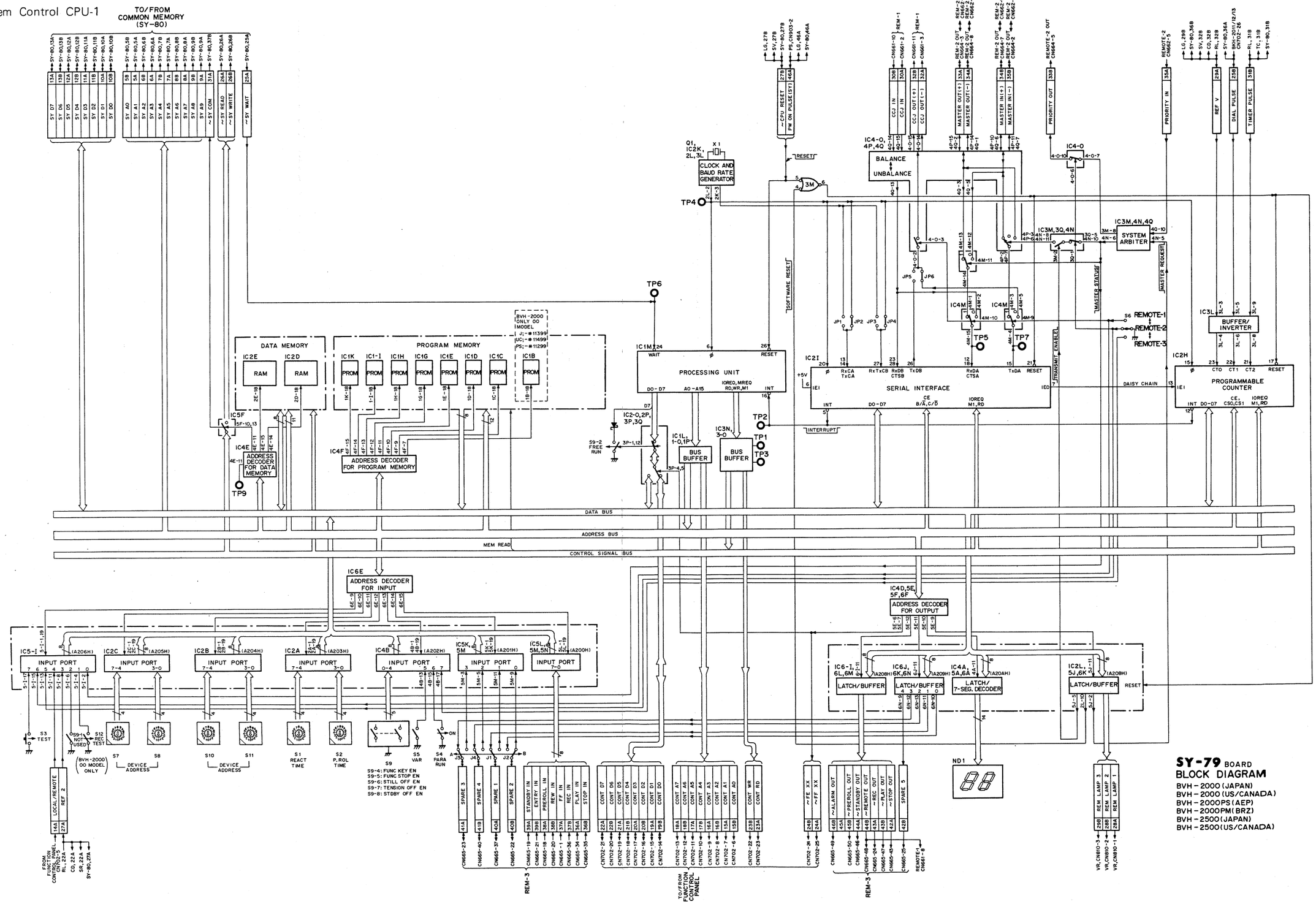

SY-79 BOARD
BLOCK DIAGRAM

BVH – 2000 (JAPAN)
BVH – 2000 (US/CANADA)
BVH – 2000PS (AEP)
BVH – 2000PM (BRZ)
BVH – 2500 (JAPAN)
BVH – 2500 (US/CANADA)

SY-80 BOARD

System Control CPU-2

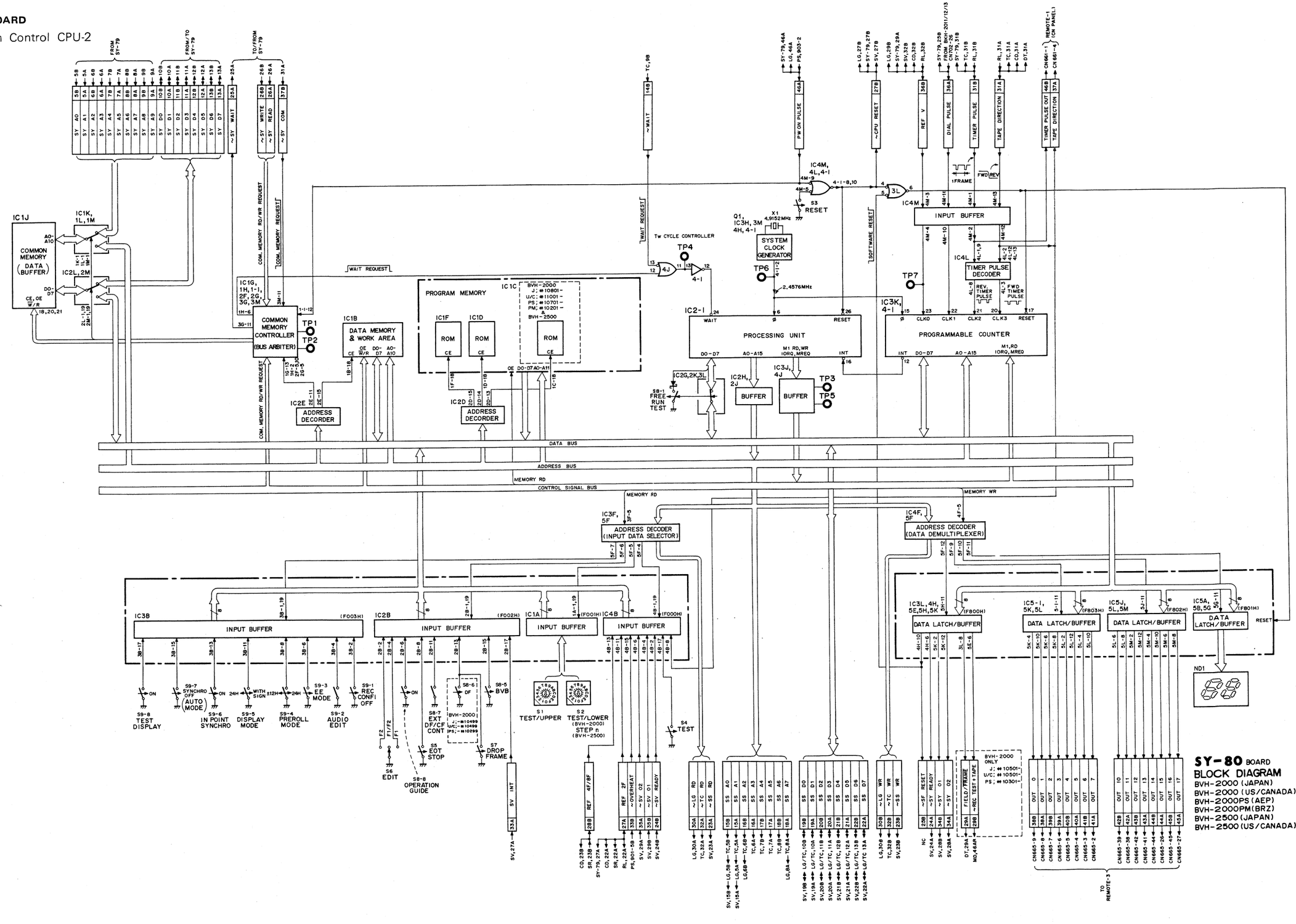

SY-80 BOARD
BLOCK DIAGRAM
BVH-2000 (JAPAN)
BVH-2000 (US/CANADA)
BVH-2000PS (AEP)
BVH-2000PM (BRZ)
BVH-2500 (JAPAN)
BVH-2500 (US/CANADA)

POWER SUPPLY SYSTEM (1/2) AC-39, FV-01 BLOCK DIAGRAM

POWER SUPPLY SYSTEM (1/2)

AC-39 BOARD
FV-01 BOARD

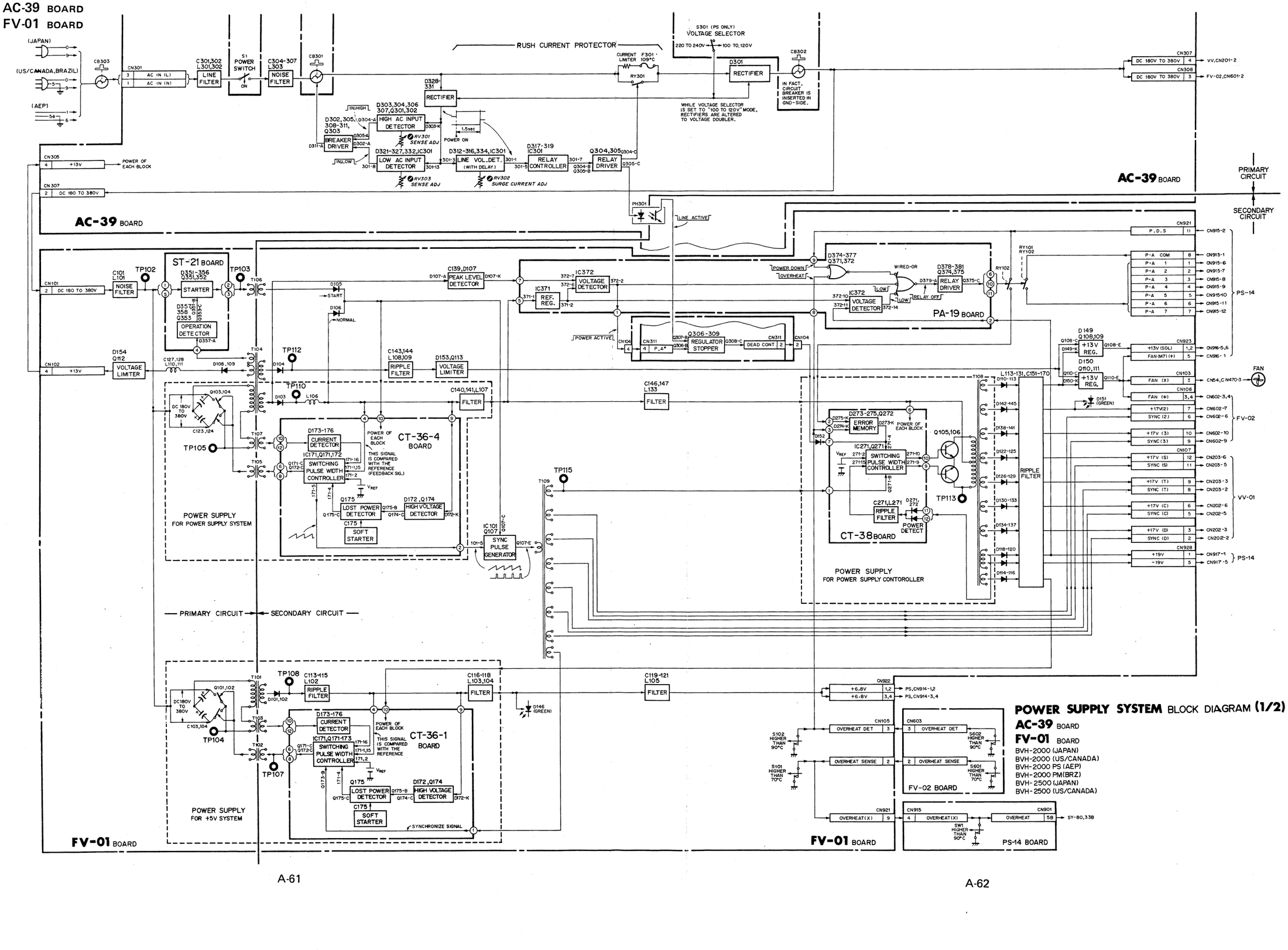

POWER SUPPLY SYSTEM BLOCK DIAGRAM **(1/2)**

AC-39 BOARD

FV-01 BOARD

BVH-2000 (JAPAN)
BVH-2000 (US/CANADA)
BVH-2000 PS (AEP)
BVH-2000 PM(BRZ)
BVH-2500 (JAPAN)
BVH-2500 (US/CANADA)

POWER SUPPLY SYSTEM (2/2) PS-14, VV-01, FV-02 BLOCK DIAGRAM

POWER SUPPLY SYSTEM (2/2)

PS-14 BOARD
VV-01 BOARD
FV-02 BOARD

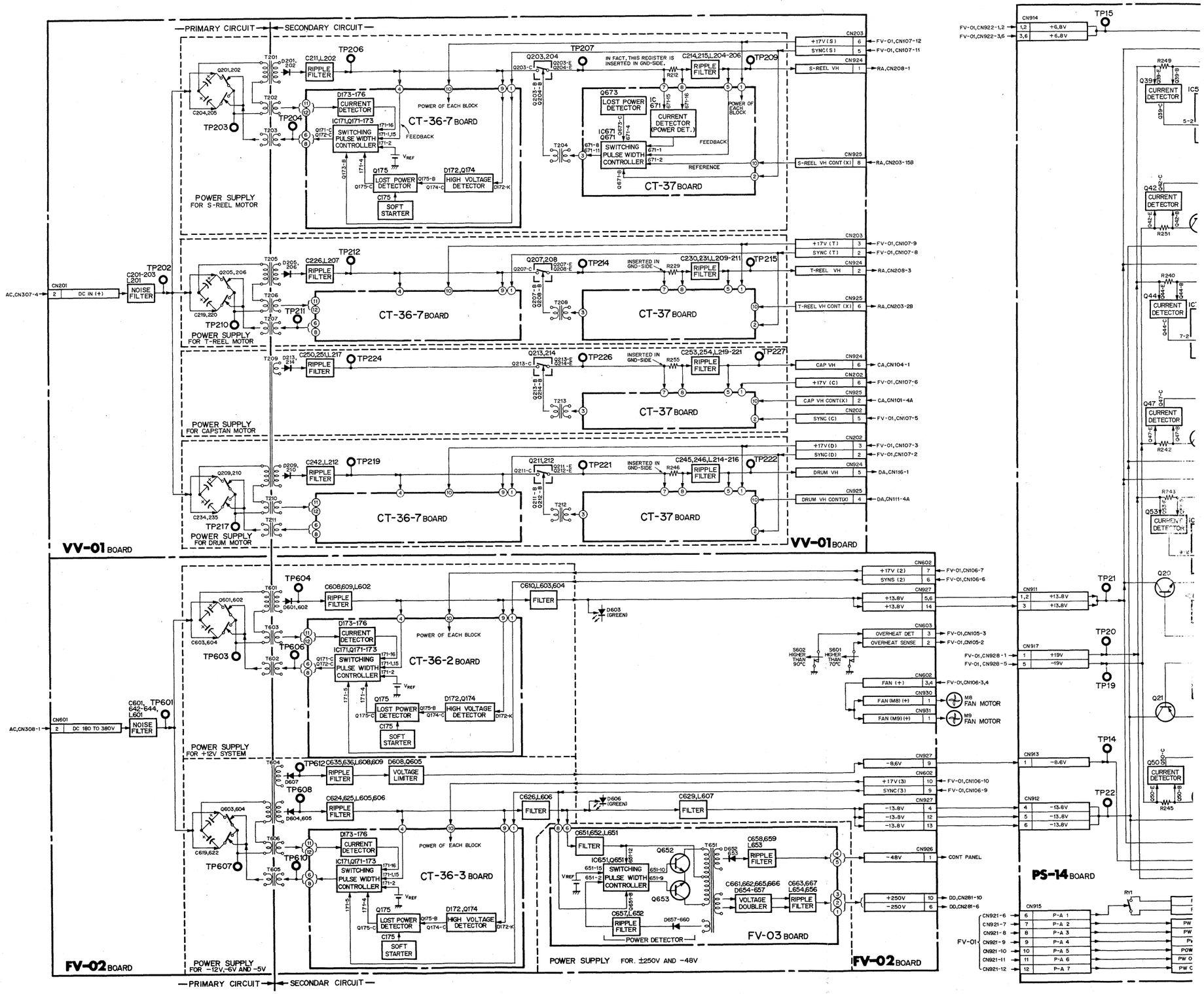

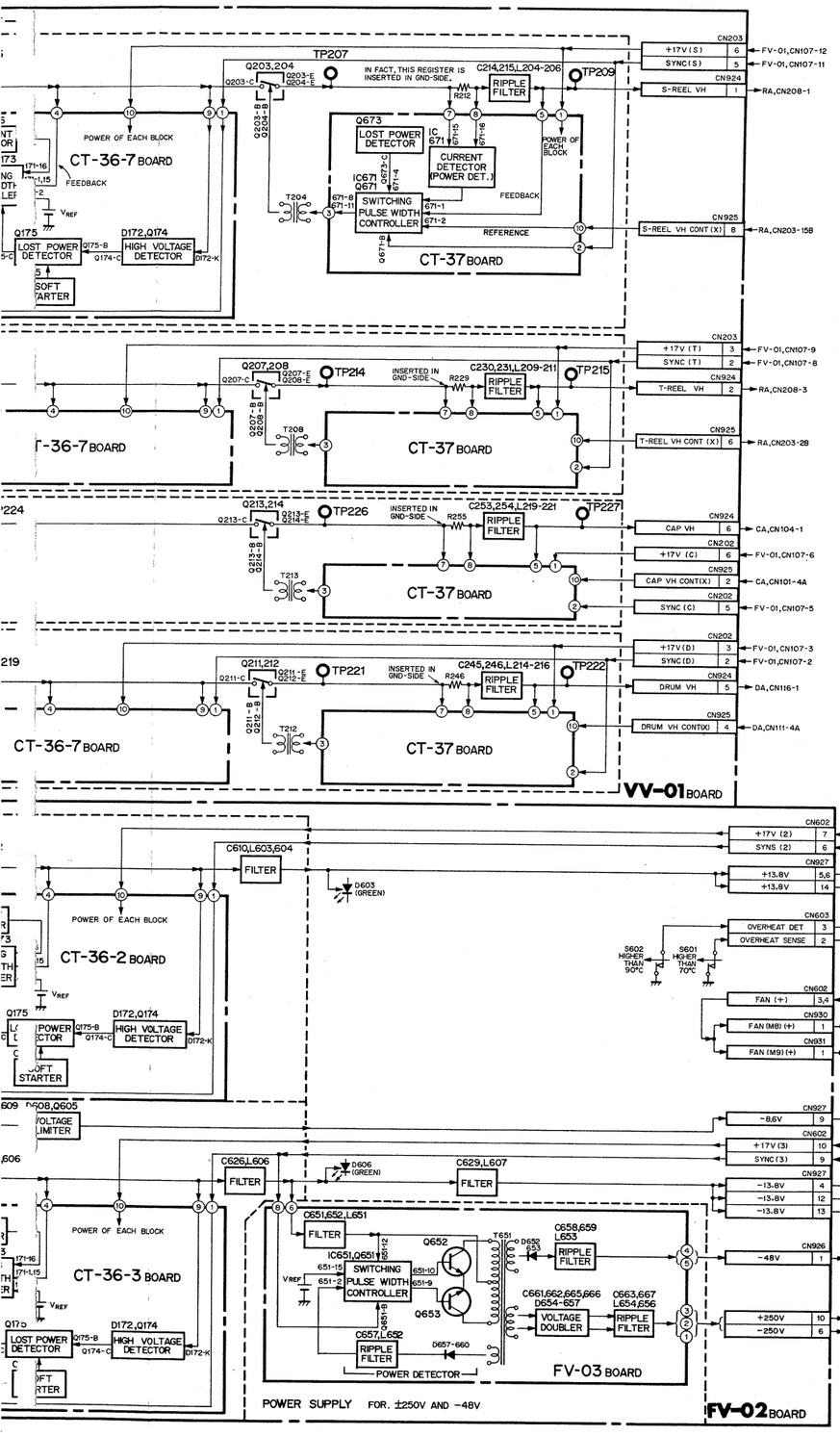

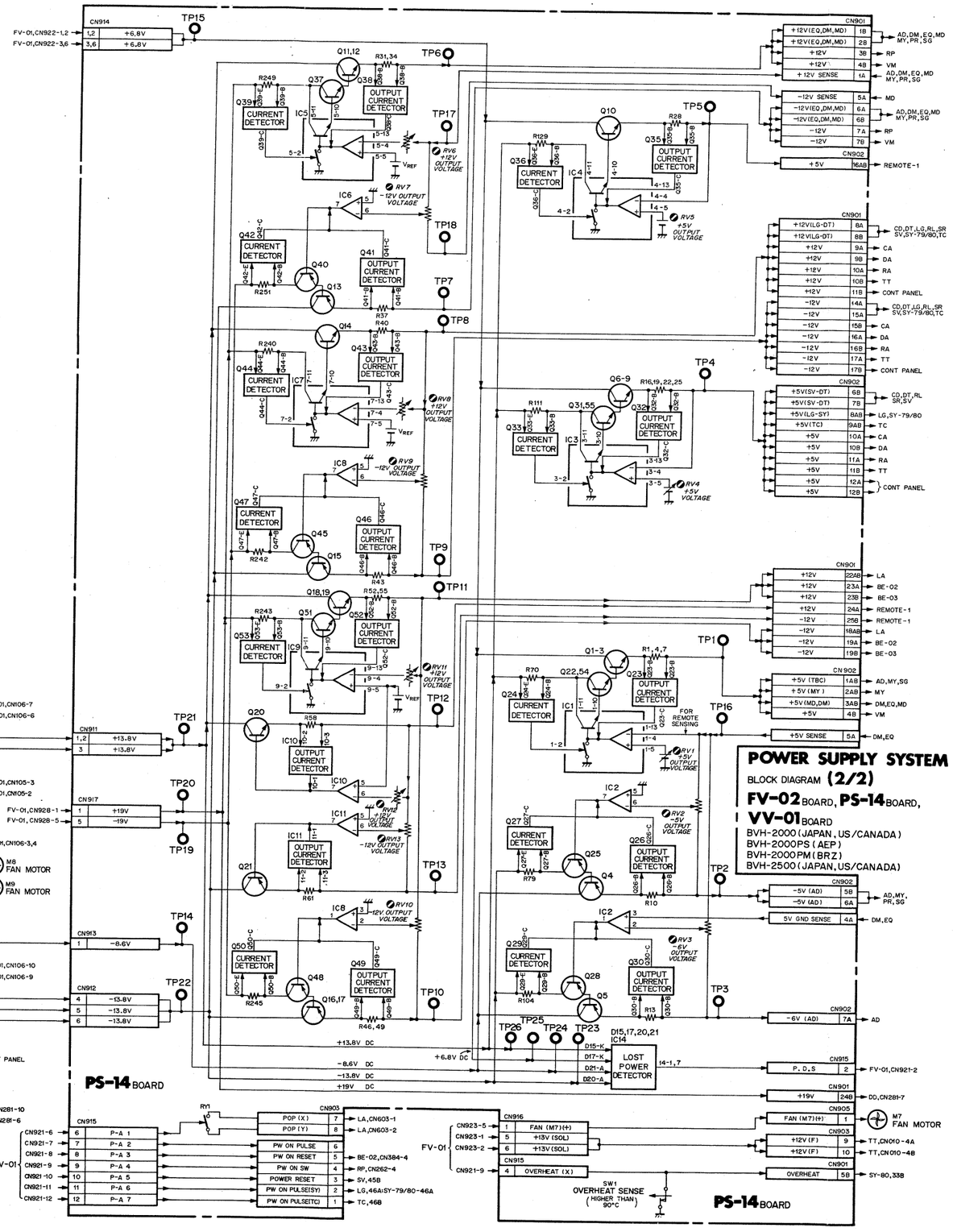

POWER SUPPLY SYSTEM
BLOCK DIAGRAM **(2/2)**
FV-02 BOARD, **PS-14** BOARD,
VV-01 BOARD
BVH-2000 (JAPAN, US/CANADA)
BVH-2000PS (AEP)
BVH-2000PM (BRZ)
BVH-2500 (JAPAN, US/CANADA)

SECTION B
SEMICONDUCTOR PIN ASSIGNMENTS

TYPE	PAGE
03P05M	B-5
10E-1	*
10E-2	*
1N4148H	*
1S1555	*
1S1585	*
1S1587	*
1S2076	*
1S2139	*
1S2473	*
1S2687	*
1SS53	*
1SS84	*
1SS106	*
1SS119	*
1SS120	*
1SS133	*
1SS148	*
1SZ52	*
2P5M	B-5
2SA530H	B-5
2SA678	B-5
2SA684	B-5
2SA706	B-5
2SA715	B-5
2SA733	B-5
2SA772	B-5
2SA773	B-5
2SA798	B-5
2SA844	B-5
2SA872	B-5
2SA872A	B-5
2SA884	B-5
2SA911	B-5
2SA925	B-5
2SA952	B-5
2SA966	B-5
2SA979	B-5
2SA995	B-5
2SA1005	B-5
2SA1013	B-5
2SA1015	B-5
2SA1026	B-5
2SA1027R	B-5
2SA1048	B-5
2SA1115	B-5
2SA1156	B-5
2SA1175	B-5
2SA1186	B-5
2SA1220A	B-5
2SB548	B-5
2SB733	B-6
2SB734	B-6
2SB739	B-5
2SB740	B-5
2SB772	B-5
2SB825	B-6
2SC403	B-6
2SC634A	B-6
2SC641K	B-6
2SC689H	B-6
2SC710	B-6
2SC945	B-6
2SC1124	B-6
2SC1126	B-6
2SC1162	B-6
2SC1173	B-6
2SC1252	B-6
2SC1363	B-6
2SC1364	B-6
2SC1474	B-6
2SC1475	B-6
2SC1583	B-6
2SC1633	B-6
2SC1634	B-6
2SC1636	B-6
2SC1733	B-6
2SC1762	B-6
2SC1775	B-6
2SC1775A	B-6
2SC1815	B-6
2SC1890A	B-6
2SC1908	B-6
2SC1986	B-6
2SC2001	B-6
2SC2009	B-6
2SC2011	B-6
2SC2012	B-6
2SC2021	B-6
2SC2236	B-6
2SC2259	B-6
2SC2315	B-6
2SC2383	B-6
2SC2458	B-6
2SC2551	B-6
2SC2555	B-6
2SC2593	B-6
2SC2603	B-6
2SC2654	B-6
2SC2690A	B-6
2SC2724	B-6
2SC2752	B-6
2SC2773	B-6
2SC2785	B-6
2SC2837	B-6
2SC2878	B-6
2SC2944	B-6
2SC3068	B-6
2SD313HP	B-6
2SD414	B-6
2SD773	B-6
2SD774	B-6
2SD788	B-6
2SD789	B-6
2SD809	B-6
2SD862	B-6
2SD882	B-6
2SD1061	B-6
2SK43	B-6
2SK107	B-6
2SK109	B-6
2SK150A	B-6
2SK162	B-6
AA5525S	B-5
AM26LS30PC	B-7
AM26LS32PC	B-7
AM685DL	B-7
BA9101	B-7
BX365A	B-8
BX381	B-8
BX1156	B-8
BX3929	B-8
BX3930	B-8
BX3931	B-8
BX3931A	B-8
CA3054	B-8
CA3102E	B-8
CTG-31S	B-5
CTU-38R	B-5
CTU-38S	B-5
CX130	B-8
CX550	B-8
CX773A	B-10
CX7903	B-9
CX7907	B-12
CX7907A	B-12
CX7912	B-14
CX7912A	B-14
CX7913	B-16
CX7913A	B-18
CX20016A-2	B-9
CX20051A	B-9
DAC-IC8BC	B-20
DM211	B-5
EQA01-08R	*
EQA02-05	*
EQA02-06	*
EQA02-07	*
EQA02-08	*
EQB01-13	*
ERA81-004	*
ERB12-01RK	*
ERB12-02RK	*
ERB12-04RK	*
ESAD33-02CS	B-5
F114	*
FT5709M	B-20
GL3HY3	B-5
GL3PG5	B-5
GL3PR3	B-5
GL6R202	B-5
GL9D03D	B-5
HA17458GS	B-20
HA17723G	B-42
HA17741GS	B-20
HD10105	B-24
HD10116	B-24
HD10117	B-24
HD10124	B-24
HD10125	B-24
HD10131	B-24
HD14001BP	B-36
HD14011BP	B-36
HD14013BP	B-36
HD14040BP	B-37
HD14046BP	B-37
HD14051BP	B-37
HD14052BP	B-38
HD14053BP	B-38
HD14069BP	B-38
HD14069UBP	B-38
HD14503BP	B-39
HD14538BP	B-39
HD75107A	B-35
HD75107AP	B-35
HD75452P	B-35
HI1-201	B-20
HM6116LP	B-20
JC501	B-6

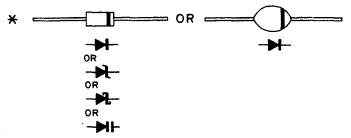

SEMICONDUCTOR INDEX

TYPE	PAGE
LH0080	B-21
LH0080A	B-21
LH0082	B-21
LH0082A	B-21
LH0084	B-22
LH0084A	B-22
LM358P	B-43
LN25RP	B-5
LN35BP	B-5
M54516P	B-22
M54517P	B-22
MB3759	B-22
MB7051	B-45
MB7052	B-46
MB7053	B-46
MB7054	B-47
MB8168	B-23
MB84001B	B-36
MB84011B	B-36
MB84013B	B-36
MB84049UB	B-37
MB84052B	B-38
MB84053B	B-38
MB84069UB	B-38
MB84081B	B-38
MB84520B	B-39
MB8747	B-23
MBM2732A	B-38
MC1496P	B-43
MC1595L	B-24
MC10105L	B-24
MC10115L	B-24
MC10116L	B-24
MC10117L	B-24
MC10124L	B-24
MC10125L	B-24
MC10131L	B-24
MC10198L	B-24
MC14001BCP	B-36
MC14008BCP	B-36
MC14011BCP	B-36
MC14013BCP	B-36
MC14015BCP	B-36
MC14043BCP	B-37
MC14046BCP	B-37
MC14049UBCP	B-37
MC14051BCP	B-37
MC14052BCP	B-38
MC14053BCP	B-38
MC14069UBCP	B-38
MC14071BCP	B-38
MC14073BCP	B-38
MC14081BCP	B-38
MC14174BCP	B-40
MC14175BCP	B-40
MC14495BCP	B-38
MC14503BCP	B-39
MC14507BCP	B-37
MC14512BCP	B-39
MC14520BCP	B-39
MC14526BCP	B-39
MC14528BCP	B-39
MC14538BCP	B-39
MC14555BCP	B-40
MC14557BCP	B-40
MC14584BCP	B-40
MSM4011RS	B-36
MSM5128	B-20
NE527H	B-25
NJM2903D	B-25
NJM4558D	B-25
NJM4559D	B-25
NJM4560D	B-25
NJM78L05	B-25
ON1102	B-5
ON1106	B-5
PY5525S	B-5
RD3.9E	*
RD4.7E	*
RD5.1E	*
RD5.6E	*
RD6.8E	*
RD7.5E	*
RD8.2E	*
RD10E	*
RD11E	*
RD13E	*
RD15E	*
RD18E	*
RD22E	*
RD30E	*
RD39E	*
RD100E	*
SIB01-02	*
S25VB60	B-5
SN74LS00N	B-25
SN74LS02N	B-25
SN74LS03N	B-25
SN7404N	B-25
SN74LS04N	B-25
SN74S04N	B-25
SN74LS05N	B-25
SN7406N	B-26
SN74LS08N	B-26
SN74LS10N	B-26
SN74S10N	B-26
SN74LS11N	B-26
SN74S11N	B-26
SN74LS12N	B-26
SN74LS14N	B-26
SN74LS20N	B-26
SN74LS27N	B-26
SN74LS30N	B-26
SN74LS32N	B-27
SN74LS74AN	B-27
SN74S74N	B-27
SN74LS85N	B-27
SN74LS86N	B-27
SN74LS107AN	B-27
SN74LS112AN	B-27
SN74120N	B-27
SN74123N	B-28
SN74LS123AN	B-28
SN74LS125AN	B-28
SN74LS126AN	B-28
SN74128N	B-28
SN74LS138N	B-28
SN74LS139N	B-28
SN74LS148N	B-28
SN74LS151N	B-29
SN74LS153N	B-29
SN74LS157N	B-29
SN74LS161AN	B-29
SN74LS162AN	B-29
SN74LS163AN	B-30
SN74LS164N	B-30
SN74S169N	B-30
SN74LS174N	B-30
SN74LS175N	B-31
SN74S189N	B-31
SN74LS191N	B-31
SN74LS195AN	B-31
SN74LS197N	B-32
SN74LS221N	B-32
SN74LS240N	B-32
SN74LS241N	B-32
SN74LS243N	B-32
SN74LS244N	B-32
SN74LS245N	B-33
SN74LS257N	B-33
SN74265N	B-33
SN74LS265N	B-33
SN74LS273N	B-33
SN74LS280N	B-33
SN74LS365AN	B-33
SN74LS367AN	B-34
SN74LS368AN	B-34
SN74LS373N	B-34
SN74LS374N	B-34
SN74LS375N	B-34
SN74LS390N	B-34
SN74LS393N	B-35
SN74LS624N	B-35
SN74LS669N	B-35
SN74LS670N	B-35
SN75107AN	B-35
SN75207BN	B-35
SN75452BP	B-35
TA7069P	B-41
TC4001BP	B-36
TC4008BP	B-36
TC4011BP	B-36
TC4013BP	B-36
TC4015BP	B-36
TC4028BP	B-36
TC4030BP	B-37
TC4040BP	B-37
TC4043BP	B-37
TC4046BP	B-37
TC4049BP	B-37
TC4051BP	B-37
TC4052BP	B-38
TC4053BP	B-38
TC4069UBP	B-38
TC4071BP	B-38
TC4073BP	B-38
TC4081BP	B-38
TC4512BP	B-39
TC4520BP	B-39
TC4528BP	B-39
TC4555BP	B-40
TC40174BP	B-40
TC40175BP	B-40
TC40H074P	B-40
TC40H368P	B-40
TC40H390P	B-41

TYPE	PAGE
TC5501P	B-41
TC5501P-1	B-41
TD62105P	B-41
THS102	B-5
THS102A	B-5
TL072ACP	B-41
TL072CP	B-41
TL074CN	B-41
TL081CP	B-41
TL082CP	B-41
TL084CN	B-41
TL191CN	B-42
TL489CP	B-42
TL601CP	B-42
TL607CP	B-42
TL610CP	B-42
TL820CP	B-42
TLG115A	B-5
U05E	*
U05G	*
UA78L05AWV	B-43
UA723DC	B-42
UA796HCA	B-43
UA796HC	B-43
UPC78L05	B-43
UPC78L05A	B-43
UPC78L12	B-43
UPC91A	B-43
UPC159A	B-43
UPC311C	B-43
UPC319C	B-43
UPC324C	B-43
UPC339C	B-43
UPC358C	B-43
UPC393C	B-43
UPC648D	B-44
UPC649C	B-44
UPC4082C	B-41
UPC4556C	B-44
UPC4557C	B-44
UPC4558C	B-25
UPD780C	B-21

TYPE	PAGE
UPD4001BC	B-36
UPD4011BC	B-36
UPD4013BC	B-36
UPD4015BC	B-36
UPD4028BC	B-36
UPD4030BC	B-37
UPD4040C	B-37
UPD4049C	B-37
UPD4051BC	B-37
UPD4053BC	B-38
UPD4069UBC	B-38
UPD4071BC	B-38
UPD4073BC	B-38
UPD4081BC	B-38
UPD4584BC	B-40
UPD5501LC-1	B-41
UPD8253C-5	B-44
US1035	*
V06C	*
V09C	*
V09G	*

AA5525S; ORANGE
PY5525S; YELLOW

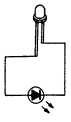

GL-3HY3; YELLOW
GL-3PG5; GREEN
GL-3PR3; RED

BOTTOM VIEW

2SA530H

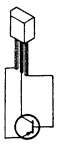

2SA678
2SA1026
2SA1027R

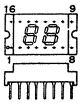

GL-6R202; RED

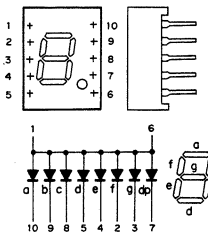

GL-9D03D ; RED

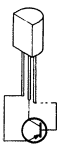

2SA684
2SA772
2SA773
2SA966
2SA1013
2SB739
2SB740

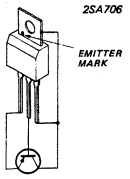

2SA706
EMITTER MARK

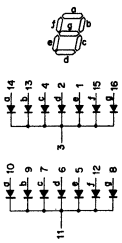

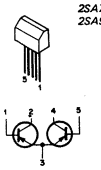

2SA798
2SA979

TOP VIEW

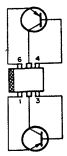

2SA884

LN25RP; RED
LN35BP; GREEN

TLG115A; GREEN

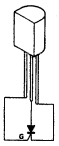

03P05M
SG-629

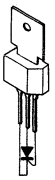

2P5M

BOTTOM VIEW

2SA911

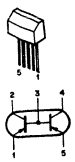

2SA995

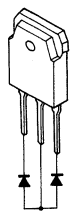

CTU-38R

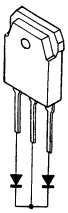

ESAD33-02CS
CTG-31S
CTU-38S

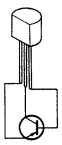

2SA1005
2SA1015
2SA733
2SA844
2SA872
2SA872A
2SA925
2SA952

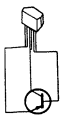

2SA1048
2SA1115

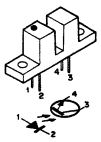

ON1102
ON1102-SF
ON1102S.SO
ON1106
ON1106.SO

BOTTOM VIEW

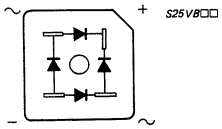

S25VB□□

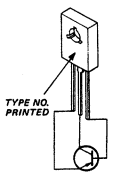

TYPE NO. PRINTED

2SA1156
2SA1220A
2SA715
2SB548
2SB772

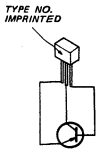

TYPE NO. IMPRINTED

2SA1175

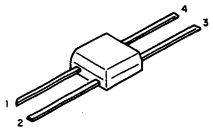

THS102
THS102A

DM211

Magneto-Sensing Element
— Equivalent Circuit —

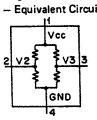

Hall Element
— Equivalent Circuit —

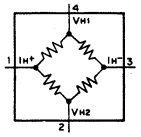

2SA1186

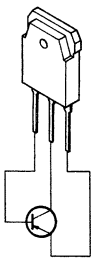

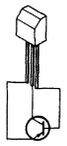

2SB733
2SB734

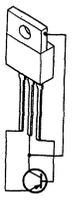

2SB825

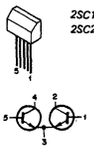

2SC1583
2SC2259

BOTTOM VIEW

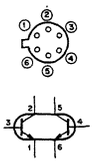

2SC1733

2SC403C
2SC634A
2SC1636

BOTTOM VIEW

2SC689H

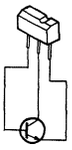

2SC2021

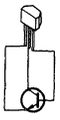

2SC2458
2SC2603
2SC2724
2SC403SP

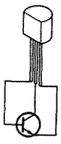

2SC710
2SC1908
2SC2012

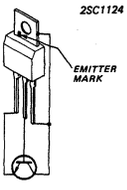

2SC1124

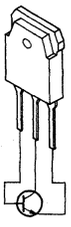

2SC2555
2SC2837
2SC2944

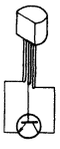

2SC2593

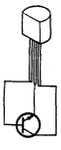

2SC1126
2SC2009
2SC2011

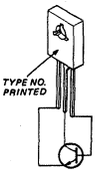

2SC1162
2SC2690A
2SC2752
2SD414
2SD809
2SD862
2SD882

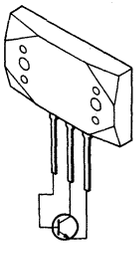

2SC2773

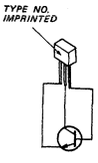

2SC2785

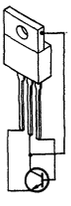

2SC1173
2SC1986
2SC2315
2SC2654
2SD313HP
2SD1061

BOTTOM VIEW

2SC1252
2SC1762

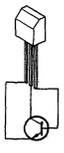

2SD773
2SD774

2SK43

2SK107

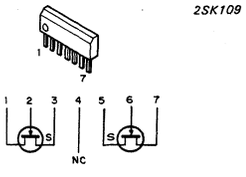

2SK109

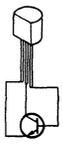

2SC1363
2SC1364
2SC1633
2SC1634
2SC1775
2SC1775A
2SC1815
2SC1890A
2SC2551
2SC2878
2SC3068
2SC641K
2SC945
JC501

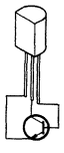

2SC1474
2SC1475
2SC2001
2SC2236
2SC2383
2SD788
2SD789

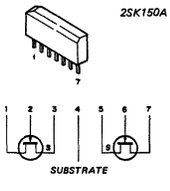

2SK150A

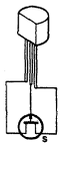

2SK162

AM685DL (ADVANCED MICRO DEVICE)

VOLTAGE COMPARATOR
(OPEN EMITTER OUTPUTS)

—TOP VIEW—

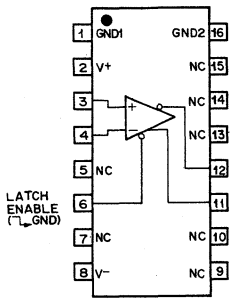

AM26LS30PC (ADVANCED MICRO DEVICE)

LINE DRIVER
–TOP VIEW–

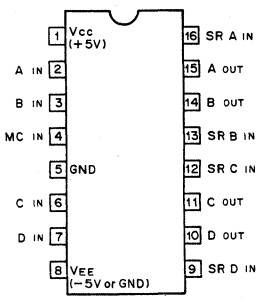

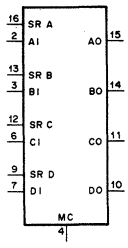

MC ; MODE CONTROL
SR ; SLEW RATE CONTROL

MC=1

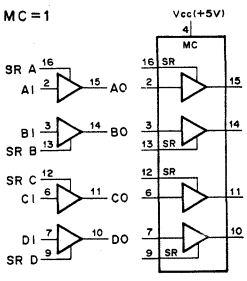

MC=0

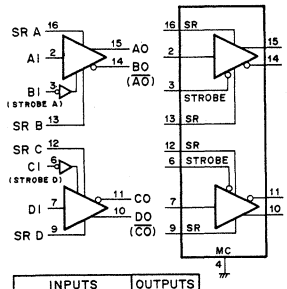

INPUTS		OUTPUTS	
MC	A TO D	A TO D	
1	0	0	
1	1	1	

INPUTS			OUTPUTS	
MC	STROBE	A & D	A & D	B & C
0	0	0	0	1
0	0	1	1	0
0	1	X	HI-Z	HI-Z

0; LOW LEVEL
1; HIGH LEVEL
X; DONT CARE
HI-Z; HIGH IMPEDANCE

AM26LS32PC (ADVANCED MICRO DEVICE)

HIGH SPEED DIFFERENTIAL LINE RECEIVER
–TOP VIEW–

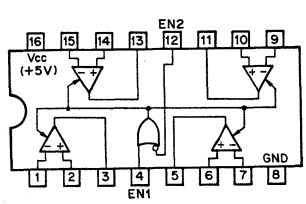

FUNCTION TABLE		
EN2	EN1	OUTPUT
0	0	ENABLE
0	1	ENABLE
1	0	HI-Z
1	1	ENABLE

0; LOW LEVEL
1; HIGH LEVEL
HI-Z; HIGH IMPEDANCE

	SENSE	INPUT VOLT
LS32	±200mV	±7V
LS33	±500mV	±15V

BA9101 (ROHM)

8-BIT A/D CONVERTER WITH 3-STATE OUTPUT CONTROL
— TOP VIEW —

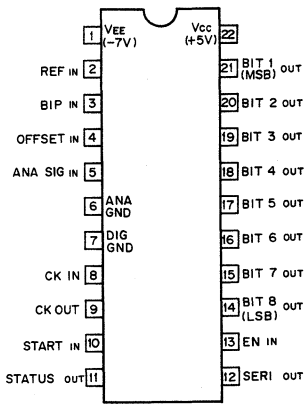

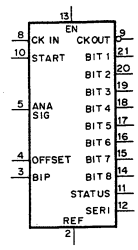

REF ; REFERENCE VOLTAGE ADJUST
BIP ; BIPOLAR OFFSET IN
CK IN ; EXTERNAL CLOCK or CEXT IN
CKOUT ; INVERTED CLOCK OUT
START ; CONVERSION START PULSE IN
STATUS ; STATUS FLAG OUT
SERI ; SERIAL OUT
EN ; OUTPUT ENABLE

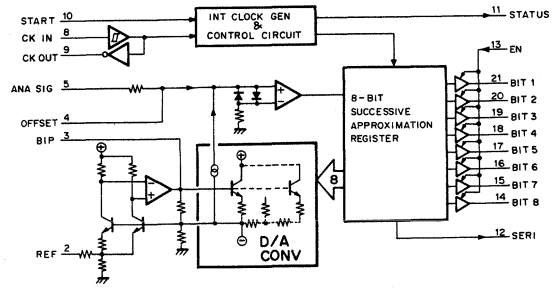

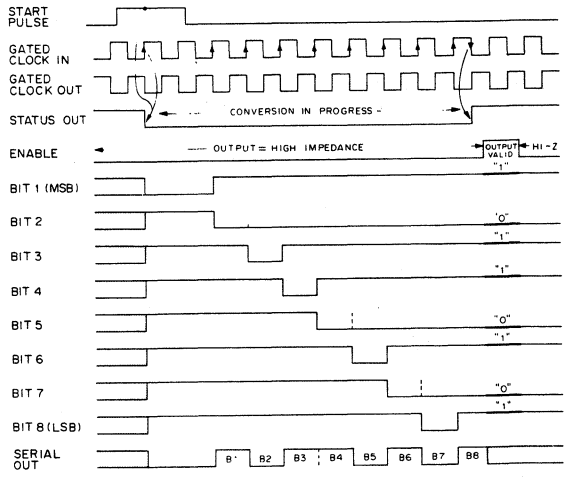

TIMING DIAGRAM (Binary Code 10110101)

BX365A (SONY)
A7015
VIDEO AMPLIFIER
— SIDE VIEW —

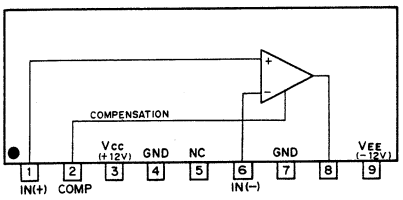

BX3931 (SONY)
BX3931A (SONY)
HYBRID VIDEO WIDEBAND
BUFFER AMPLIFIER
—IMPRINTED SIDE—

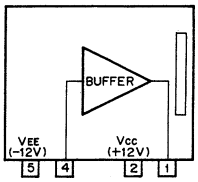

BX381 (SONY)
PHASE COMPARATOR
- SIDE VIEW-

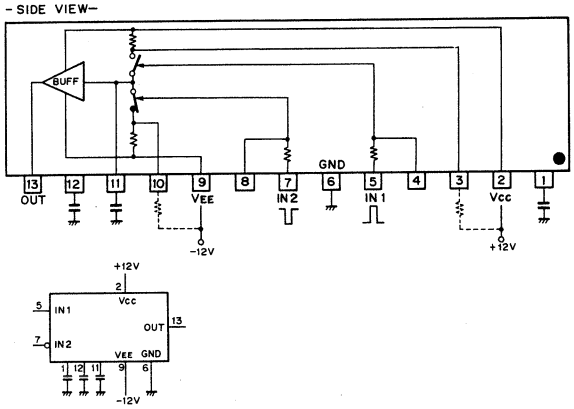

CA3054 (RCA)
DIFFERENTIAL AMPLIFIER
—TOP VIEW—

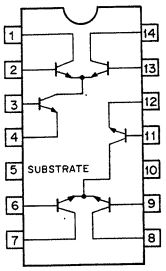

CA3102E(RCA)
HIGH FREQ.DIFFERENTIAL AMPLIFIER
—TOP VIEW—

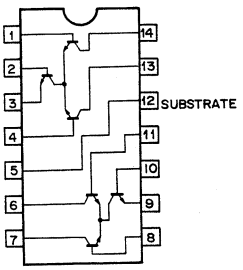

BX1156 (SONY)
BX3929 (SONY)
HYBRID VIDEO RF PREAMPLIFIER
—IMPRINTED SIDE—

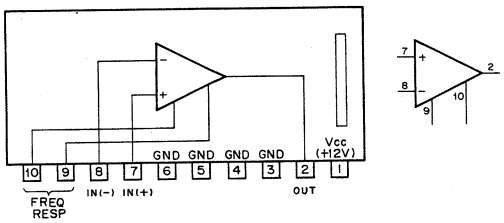

CX130 (SONY)
ANALOG SWITCH
—TOP VIEW—

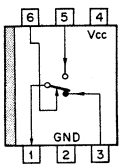

CONT. INPUT (PIN6)	SW
LOW OR OPEN	
HIGH	

BX3930 (SONY)
HYBRID VIDEO WIDEBAND DIFFERENTIAL AMPLIFIER
— IMPRINTED SIDE —

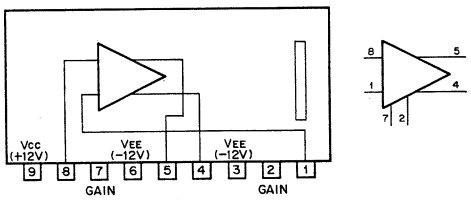

CX550 (SONY)
AUDIO PREAMPLIFIER
—SIDE VIEW—

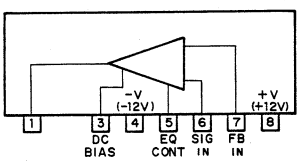

CX20016 (SONY)
CX20016A (SONY)
CX20016A-2 (SONY)
TDC1007J (TRW)
BIPOLAR/TTL 8-BIT VIDEO A/D CONVERTER
— TOP VIEW —

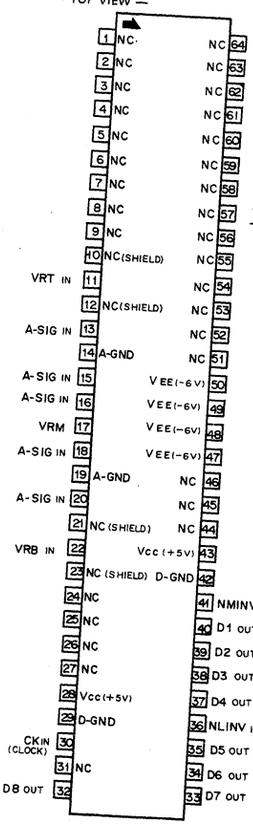

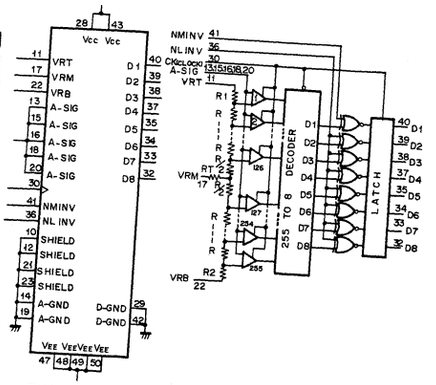

TIMING DIAGRAM

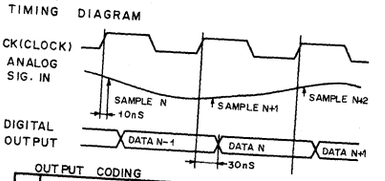

OUTPUT CODING

STEP	RANGE Ex. 2000V FULL SCALE	OUTPUTS NM(INV)= 1 NL INV= 1	0 0	0 1	1 0
000	0.0000V	00 00 00 00	11 11 11 11	10 000000	01 11 11 11
001	-0.0078V	00000001	11 11 11 10	10 000001	01 11 11 10
:	:	:	:	:	:
127	-0.9961V	01 11 11 11	10 000000	11 11 11 11	00 00 00 00
128	-1.0039V	10 00 00 00	01 11 11 11	00 000000	11 11 11 11
129	-1.0118	10 000001	01 11 11 10	00 00 00 01	11 11 11 10
:	:	:	:	:	:
255	-2.0000V	11 11 11 11	00 00 00 00	01 11 11 11	10 000000

CX20051 (SONY)
CX20051A (SONY)
10-BIT D/A CONVERTER (ECL INPUT)
— TOP VIEW —

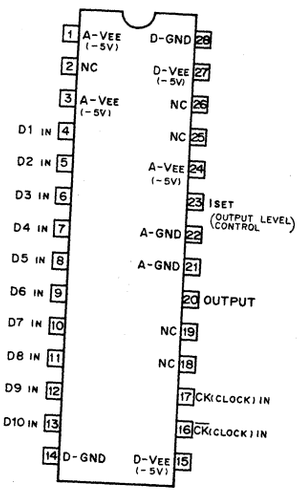

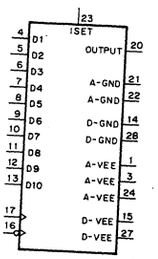

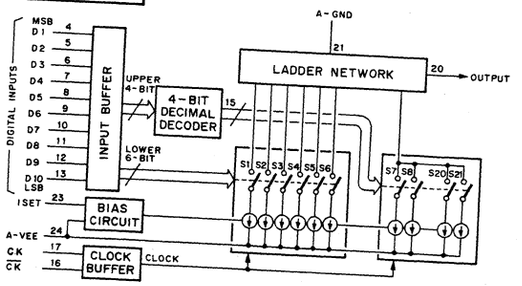

CX7903 (SONY)
C-MOS GENLOCK DRIVER FOR CX773A
— TOP VIEW —

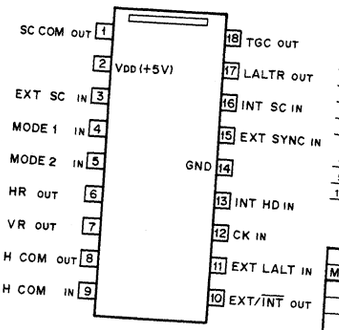

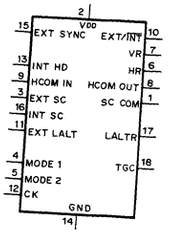

INPUTS MODE 2	INPUTS MODE 1	EXT LOCK MODE	
0	0	M1	PAL: VBS
0	1	M2	PALM: VBS
1	0	M3	PAL: VS/SC/LALT
			SECAM: VS/SC/LALT
1	1	M4	NTSC: VBS
			NTSC: VS/SC
			PALM: VS/SC/LALT

0 ; LOW LEVEL
1 ; HIGH LEVEL

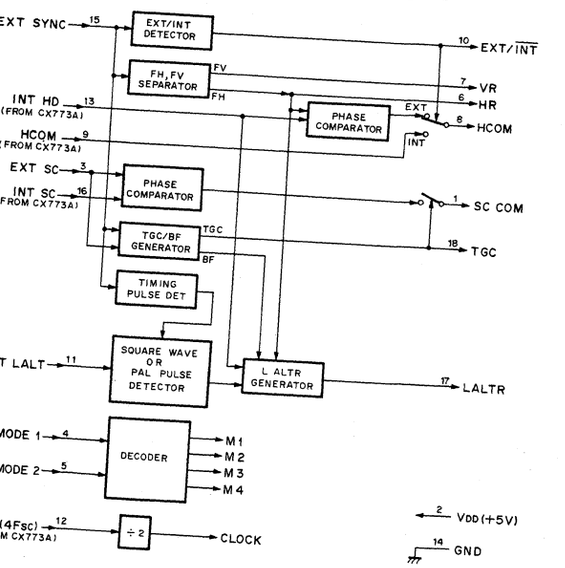

CX773A (SONY)
CX773A-1 (SONY)
C-MOS SYNC GENERATOR (NTSC, PAL-M, PAL, SECAM)
— TOP VIEW —

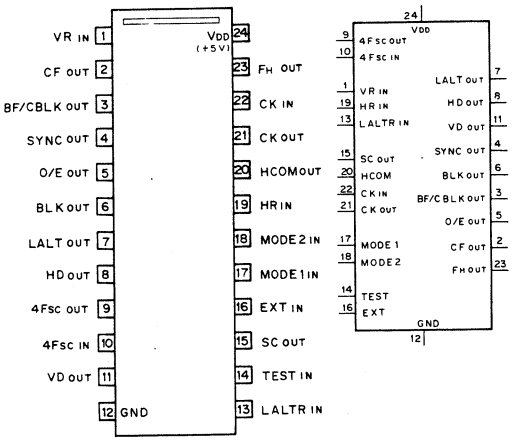

O/E : ODD/EVEN FIELD
CF : COLOR FRAME PULSE
HCOM : H COMPARATOR

SYSTEM	4Fsc	CLOCK
NTSC	910 FH	910FH
PAL	1135FH+2Fv	908FH
PALM	909FH	910FH
SECAM	———	908FH

INPUTS		SYSTEM
MODE 1	MODE 2	
0	0	NTSC
0	1	SECAM
1	0	PALM
1	1	PAL

0 ; LOW LEVEL (GND)
1 ; HIGH LEVEL (VDD)

INPUTS		FUNCTION
EXT	TEST	
0	0	INTERNAL
0	1	INVALID
1	0	EXT
1	1	TEST

TEST "0": OPEN (INTERNALLY PULLED DOWN)

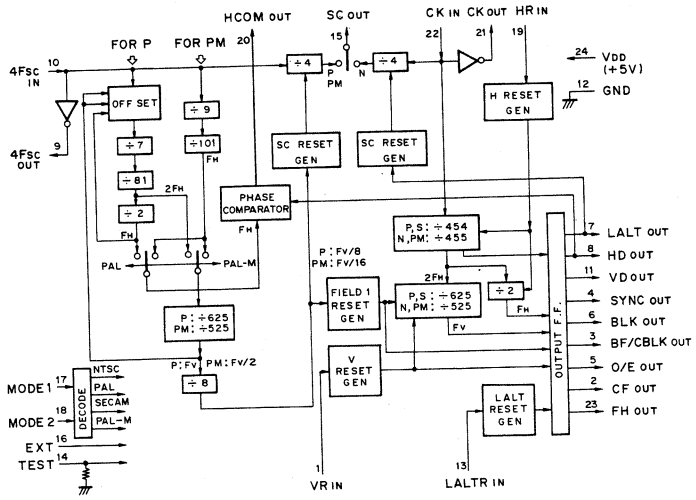

P : PAL, SECAM
N : NTSC, PALM

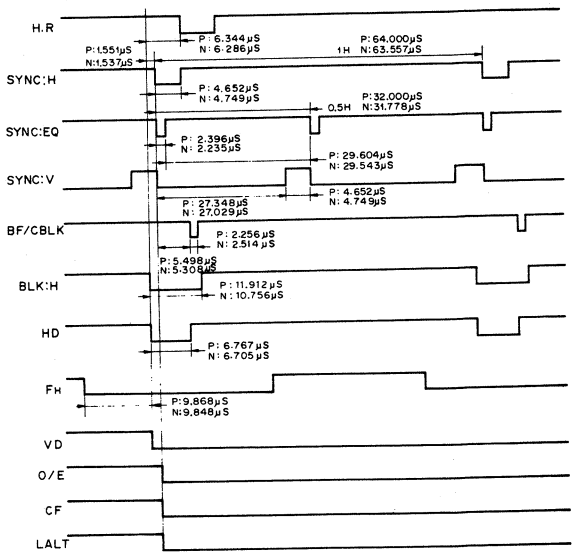

NTSC, PAL-M (FIELD 1,3)

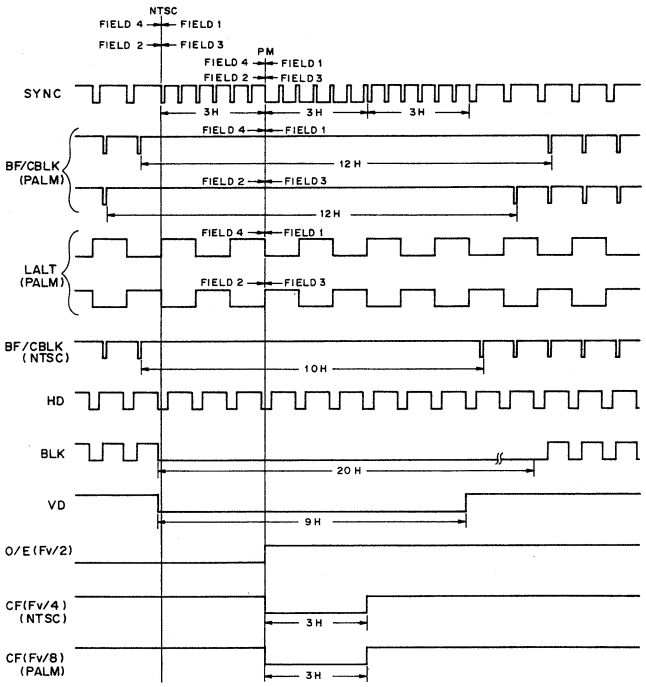

NTSC, PAL-M (FIELD 2, 4)

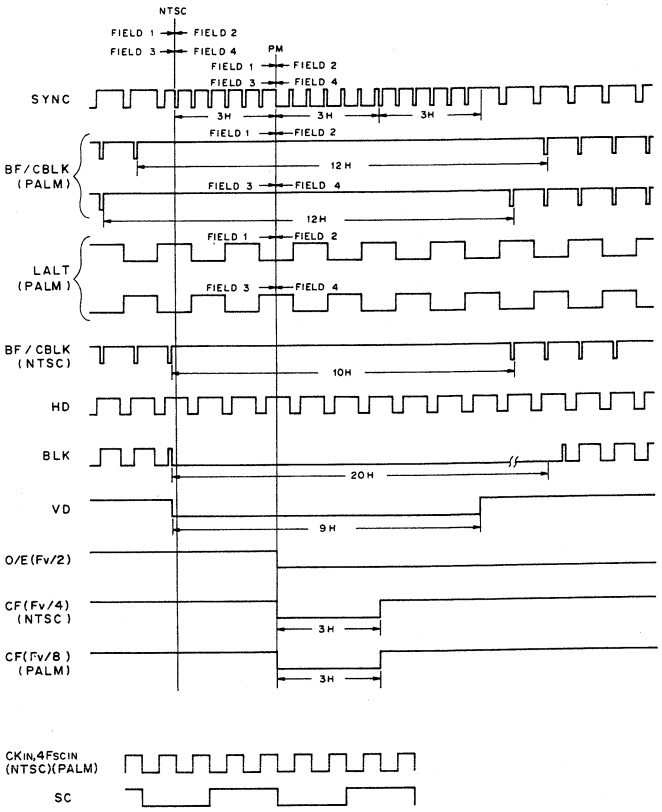

PAL, SECAM (FIELD1,3)

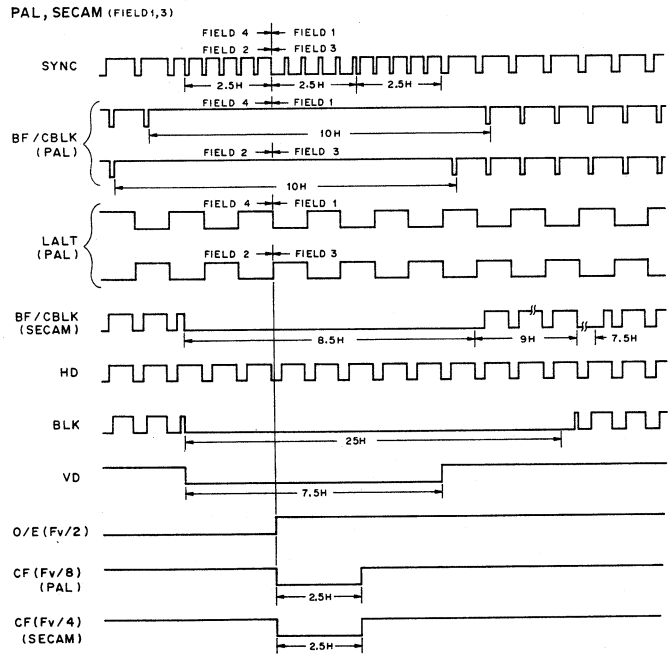

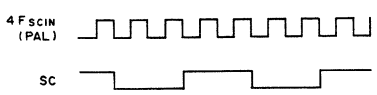

PAL, SECAM (FIELD 4,2)

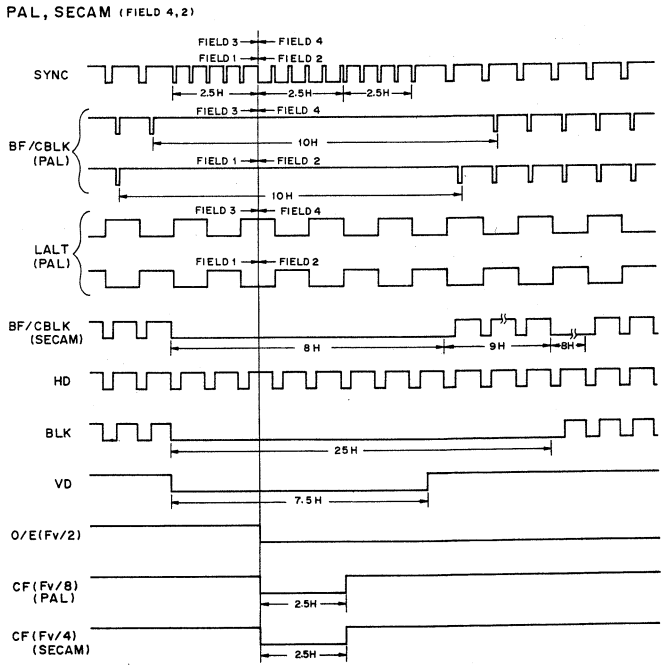

CX7907 (SONY)
CX7907A (SONY)
C-MOS TIME CODE GENERATOR
— TOP VIEW —

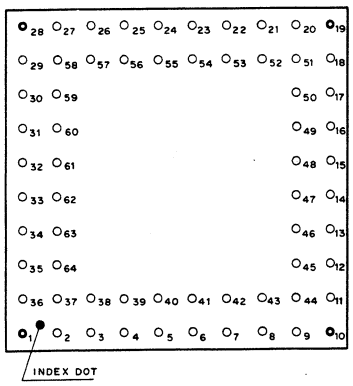

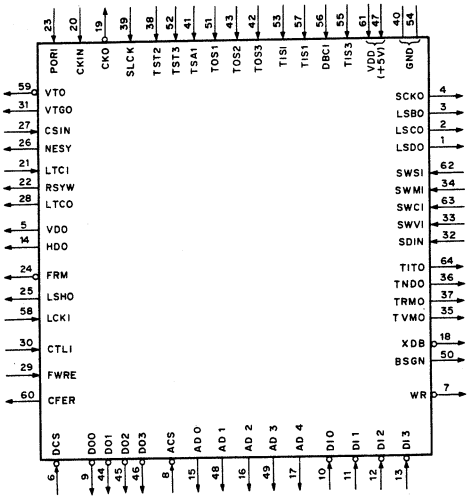

PIN ASSIGNMENT

Pin No.	IN	OUT	SYMBOL
1		o	LSDO
2		o	LSCO
3		o	LSBO
4		o	SCKO
5		o	VDO
6	o		DCS
7		o	WR
8	o		ACS
9		o	DO0
10	o		DI0
11	o		DI1
12	o		DI2
13	o		DI3
14		o	HDO
15		o	AD0
16		o	AD2

Pin No.	IN	OUT	SYMBOL
17		o	AD4
18		o	XDB
19		o	CKO
20	o		CKIN
21	o		LTCI
22		o	RSYW
23	o		PORI
24		o	FRM
25		o	LSHO
26		o	NESY
27	o		CSIN
28		o	LTCO
29	o		FWRE
30	o		CTLI
31		o	VTGO
32	o		SDIN

Pin No.	IN	OUT	SYMBOL
33	o		SWVI
34	o		SWMI
35		o	TVMO
36		o	TNDO
37		o	TRMO
38	o		TST2
39	o		SLCK
40		o	GND
41	o		TSAI
42	o		TOS3
43	o		TOS2
44		o	DO1
45		o	DO2
46		o	DO3
47	o		VDD (+5V)
48		o	AD1

Pin No.	IN	OUT	SYMBOL
49		o	AD3
50		o	BSGN
51	o		TOS1
52	o		TST3
53	o		TISI
54		o	GND
55	o		TIS3
56	o		DBCI
57	o		TIS1
58	o		LCKI
59		o	VTO
60		o	CFER
61	o		VDD (+5V)
62	o		SWSI
63	o		SWCI
64		o	TITO

BLOCK DIAGRAM

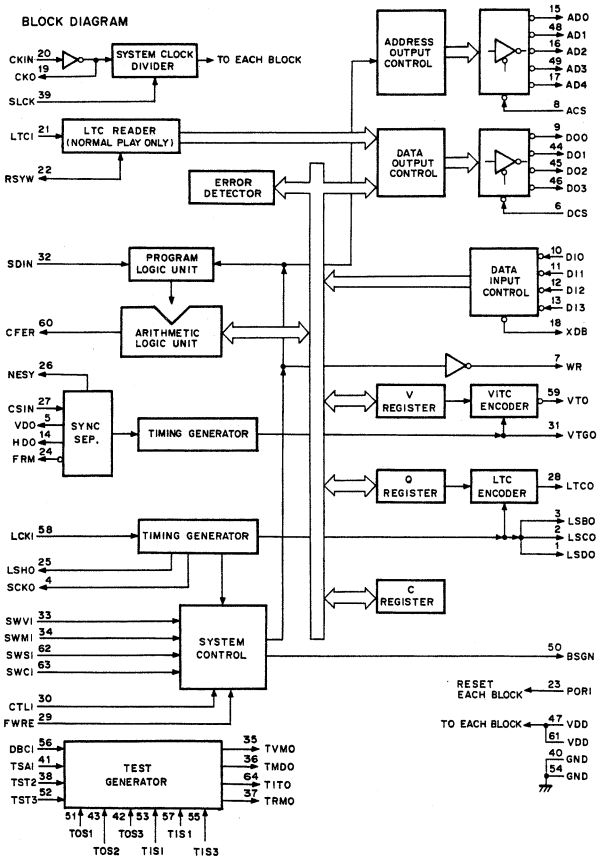

FUNCTIONAL PIN DEFINITION

Pin No.	SYMBOL	DESCRIPTION
8	ACS	ADDRESS LINE CHIP SELECT INPUT
15	AD0	ADDRESS DATA OUTPUT
48	AD1	
16	AD2	
49	AD3	
17	AD4	
50	BSGN	BUSY GENERATOR OUTPUT
60	CFER	COLOR FRAME ERROR FLAG OUTPUT
20	CKIN	SYSTEM CLOCK INPUT
19	CKO	CLOCK OUTPUT
27	CSIN	COMPOSITE SYNC INPUT
30	CTLI	CTL(TIMER) SIGNAL INPUT (┐)
6	DCS	DATA LINE CHIP SELECT INPUT (NEGATIVE-LOGIC)
10	DI0	DATA BUS INPUT (NEGATIVE-LOGIC)
11	DI1	
12	DI2	
13	DI3	
9	DO0	DATA BUS OUTPUT (NEGATIVE-LOGIC)
44	DO1	
45	DO2	
46	DO3	
24	FRM	FRAME SIGNAL OUTPUT (NEGATIVE-LOGIC)
29	FWRE	CTL DIRECTION INPUT
14	HDO	HORIZONTAL SYNC DRIVE OUTPUT
58	LCKI	LTC CLOCK INPUT (SMPTE 9.6kHz/EBU 8kHz)
3	LSBO	LTC SYNCHRONOUS SIGNAL B OUTPUT
2	LSCO	LTC SYNCHRONOUS SIGNAL C OUTPUT
1	LSDO	LTC SYNCHRONOUS SIGNAL D OUTPUT
25	LSHO	LTC SYNCHRONOUS SIGNAL H OUTPUT
21	LTCI	LTC INPUT
28	LTCO	LTC SIGNAL OUTPUT
26	NESY	LOST-SYNC FLAG OUTPUT
23	PORI	POWER ON RESET INPUT
22	RSYW	READ SYNC WORD OUTPUT
4	SCKO	SWITCHES SIGNAL IN CLOCK OUTPUT
32	SDIN	SERIAL DATA INPUT
39	SLCK	SELECT CLOCK INPUT
63	SWCI	SWITCHES SIGNAL C INPUT
34	SWMI	SWITCHES SIGNAL M INPUT
62	SWSI	SWITCHES SIGNAL S INPUT
33	SWVI	SWITCHES SIGNAL V INPUT
5	VDO	VERTICAL SYNC DRIVE OUTPUT
31	VTGO	VITC GATE SIGNAL OUTPUT
59	VTO	VITC SIGNAL OUTPUT (NEGATIVE-LOGIC)
7	WR	WRITE SIGNAL OUTPUT (NEGATIVE-LOGIC)
18	XDB	EXTERNAL DATA BUS IN FLAG OUTPUT (NEGATIVE-LOGIC)
47	VDD	POWER LINE (+5V)
61	VDD	
40	GND	GND LINE
54	GND	
56	DBCI	TEST INPUT (TO BE CONNECTED WITH GND)
57	TIS1	
55	TIS3	
53	TISI	
51	TOS1	
43	TOS2	
42	TOS3	
41	TSAI	
38	TST2	
52	TST3	
64	TITO	TEST OUTPUT (TO BE LEFT OPEN)
36	TNDO	
37	TRMO	
35	TVMO	

#32 SDIN

LSDO	LSCO	LSBO	SDIN	FUNCTION
0	0	0	⌐	INCREASE IN BIT 'FR or U1'
0	0	1		INCREASE IN BIT 'FT or U2'
0	1	0		INCREASE IN BIT 'SE or U3'
0	1	1		INCREASE IN BIT 'ST or U4'
1	0	0		INCREASE IN BIT 'MN or U5'
1	0	1		INCREASE IN BIT 'MT or U6'
1	1	0		INCREASE IN BIT 'HR or U7'
1	1	1		INCREASE IN BIT 'HT or U8'

NOTE;INFLUENCED BIT IS DECIDED BY FIRST 2 BITS OF SWCI.

#33 SWVI

LSDO	LSCO	LSBO	SWVI	FUNCTION
0	0	0	SW1A†	VITC POSITION SELECT A
0	0	1	SW1B†	
0	1	0	SW1C†	
0	1	1	SW1D†	
1	0	0	SW2A†	VITC POSITION SELECT B
1	0	1	SW2B†	
1	1	0	SW2C†	
1	1	1	SW2D†	

†;VITC POSITION SELECT

SW1D SW2D	SW1C SW2C	SW1B SW2B	SW1A SW2A	INSERTION LINE NTSC	INSERTION LINE PAL,SECAM
0	0	0	0	LINE 25	LINE 22,335
0	0	0	1	24	21,334
0	0	1	0	23	20,333
0	0	1	1	22	19,332
0	1	0	0	21	18,331
0	1	0	1	20	17,330
0	1	1	0	19	16,329
0	1	1	1	18	15,328
1	0	0	0	17	14,327
1	0	0	1	16	13,326
1	0	1	0	15	12,325
1	0	1	1	14	11,324
1	1	0	0	13	10,323
1	1	0	1	12	9,322
1	1	1	0	11	8,321
1	1	1	1	10	7,320

#34 SWMI

LSDO	LSCO	LSBO	SWMI	FUNCTION
0	0	0	x	INSERT SWMI DATA INTO BIT 'AS1'(NEGATIVE-LOGIC)
0	0	1	x	INSERT SWMI DATA INTO BIT 'AS2'(NEGATIVE-LOGIC)
0	1	0	x	INSERT SWMI DATA INTO BIT 'AS3'(NEGATIVE-LOGIC)
0	1	1	x	INSERT SWMI DATA INTO BIT 'AS4'(NEGATIVE-LOGIC)
1	0	0	x	INSERT SWMI DATA INTO BIT 'AS5'(NEGATIVE-LOGIC)
1	0	1	x	INSERT SWMI DATA INTO BIT 'AS6'(NEGATIVE-LOGIC)
1	1	0	⌐	COLOR FRAME LOCK IN FIELD 1
1	1	1	0	COLOR FRAME OFF
1	1	1	1	COLOR FRAME ON

X;DON'T CARE.

#62 SWSI

LSDO	LSCO	LSBO	SWSI	FUNCTION
0	0	0	FBS1*	VITC FIELD MARK/ LTC PHASE CORRECTION POSITION SELECT
0	0	1	FBS2*	
0	1	0	FBS3*	
0	1	1	0	PHASE CORRECTION ON
0	1	1	1	PHASE CORRECTION OFF
1	0	0	S1**	SIGNAL FORMAT SELECT
1	0	1	S2**	
1	1	0	S4**	
1	1	1	x	-

x;DON'T CARE.

*;VITC FIELD MARK/LTC PHASE CORRECTION POSITION SELECT

FBS3	FBS2	FBS1	FIELD MARK POSITION	LTC BIT No.
0	0	0	AS1	10
0	0	1	AS2	11
0	1	0	AS3	27
0	1	1	AS4	43
1	0	0	AS5	58
1	0	1	AS6	59
1	1	0	-	-
1	1	1	-	-

NOTE;LTC PHASE CORRECTION BIT OF CX7907 IS FIXED ON BIT-63.

**;SIGNAL FORMAT SELECT

S4	S2	S1	FORMAT	FRAME
0	0	0	FILM	24
0	0	1	NOT ALLOWED	-
0	1	x		
1	0	0	PAL,SECAM	25
1	0	1	NOT ALLOWED	-
1	1	0	NTSC NDF	30
1	1	1	NTSC DF	30

DF;DROP FRAME
NDF;NON DROP FRAME
x;DON'T CARE.

0;LOW LEVEL
1;HIGH LEVEL

#63 SWCI

LSDO	LSCO	LSBO	SWCI	FUNCTION
0	0	0	0	U-BIT IN/OUT DATA SELECT*1
0	0	0	1	TIME
0	0	1	0	CTL
0	0	1	1	TIME/U-BIT
0	1	0	x	-
0	1	1	0	DATA RESET ON*2
0	1	1	1	DATA RESET OFF
1	0	0	0	TIME DATA HOLD
1	0	0	1	TIME DATA RUN
1	0	1	⌐	EXTERNAL DATA LOAD*2
1	1	0	0	EXTRAPOLATION ON
1	1	0	1	EXTRAPOLATION OFF
1	1	1	x	-

x; DON'T CARE.
*1;REFER TO TIMING CHART(DATA OUT).
*2;INFLUENCED DATA IS DECIDED BY FIRST 2 BITS OF SWCI.

ERROR BYPASS ALGORITHM

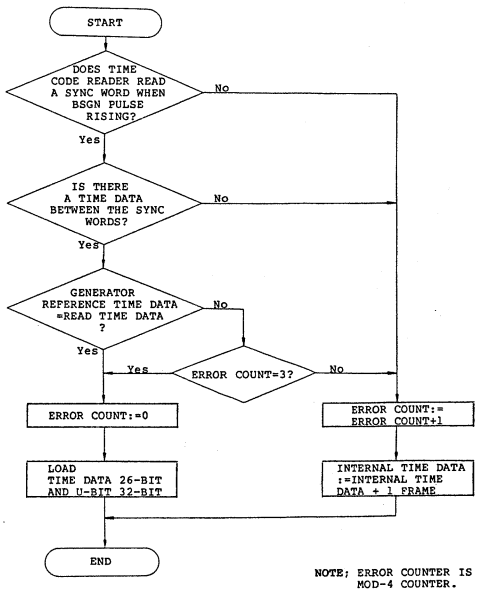

NOTE; ERROR COUNTER IS MOD-4 COUNTER.

TIMING CHART

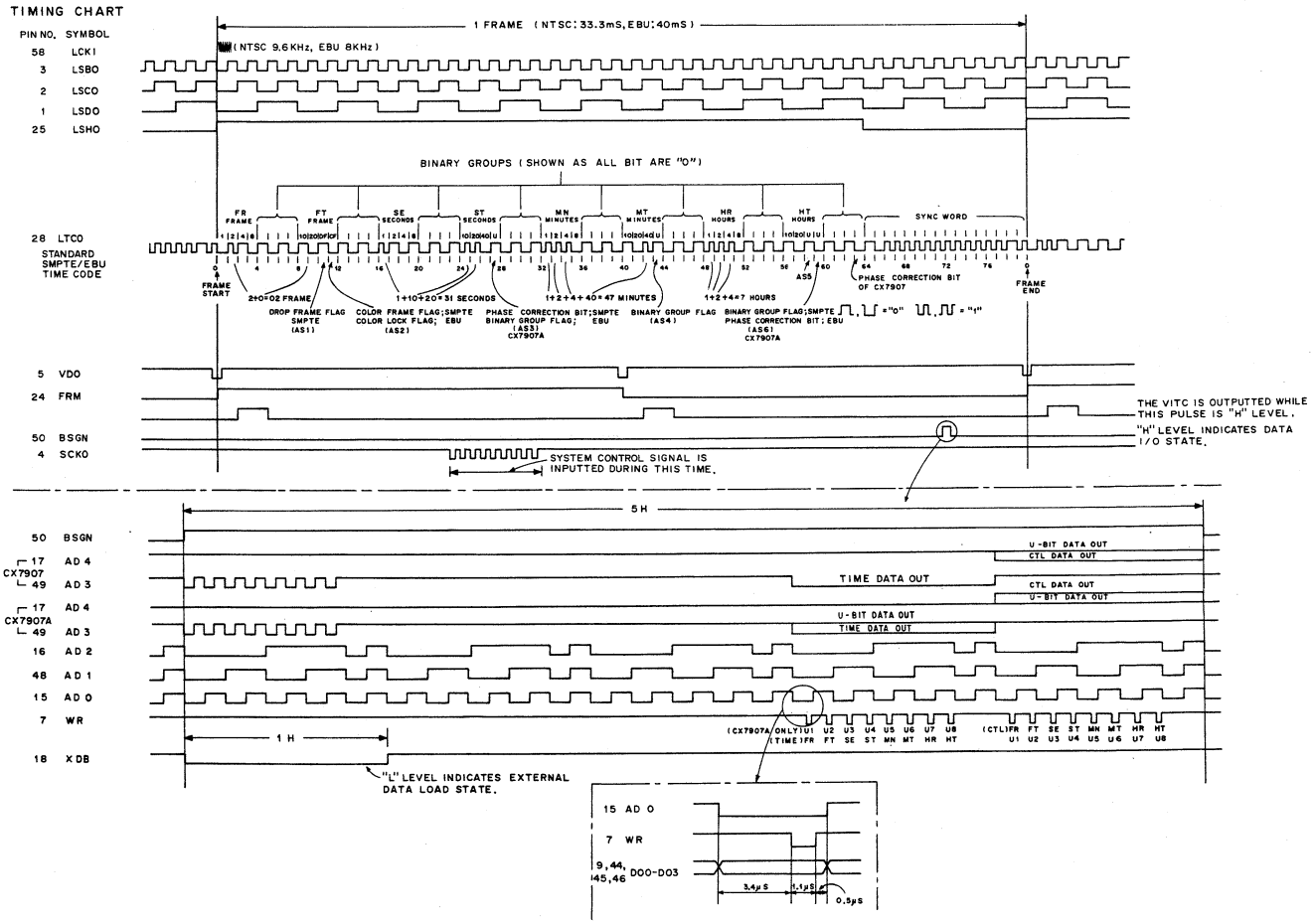

CX7912 (SONY)
CX7912A (SONY)
C-MOS TIME CODE READER
— TOP VIEW —

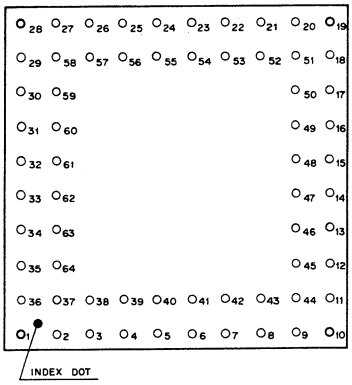

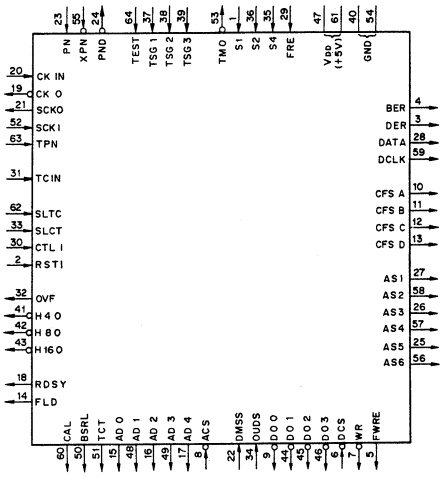

PIN ASSIGNMENT

PIN NO.	IN	OUT	SYMBOL	PIN NO.	IN	OUT	SYMBOL	PIN NO.	IN	OUT	SYMBOL	PIN NO.	IN	OUT	SYMBOL
1	O		S1	17		O	AD 4	33	O		SLCT	49		O	AD 3
2	O		RSTI	18		O	RDSY	34	O		OUDS	50		O	BSRL
3		O	DER	19		O	CK O	35	O		S4	51		O	TCT
4		O	BER	20	O		CK IN	36	O		S2	52	O		SCKI
5		O	FWRE	21		O	SCKO	37	O		TSG 1	53		O	TMO
6	O		DCS	22	O		DMSS	38	O		TSG 2	54		O	GND
7		O	WR	23	O		PN	39	O		TSG 3	55	O		XPN
8	O		ACS	24		O	PND	40		O	GND	56		O	AS6
9		O	DO 0	25		O	AS5	41		O	H40	57		O	AS4
10		O	CFS A	26		O	AS3	42		O	H80	58		O	AS2
11		O	CFS B	27		O	AS1	43		O	H160	59		O	DCLK
12		O	CFS C	28		O	DATA	44		O	DO1	60		O	CAL
13		O	CFS D	29	O		FRE	45		O	DO2	61	O		Vpp(+5V)
14		O	FLD	30	O		CTL I	46		O	DO3	62	O		SLTC
15		O	AD 0	31	O		TC IN	47	O		Vpp(+5V)	63	O		TPN
16		O	AD 2	32		O	OVF	48		O	AD 1	64	O		TEST

MODE SELECT

SLCT	SLTC	MODE
0	0	AUTO
0	1	TIME CODE
1	0	CTL
1	1	AUTO

CTL COUNT

FRE	RSTI	COUNT
0	X	DOWN COUNT
1	X	UP COUNT
X	┐└	RESET

SIGNAL FORMAT SELECT

S4	S2	S1	FORMAT	FRAME
0	0	0	FILM	24
0	0	1	NOT ALLOWED	—
0	1	0		
0	1	1		
1	0	0	PAL, SECAM	25
1	0	1	NOT ALLOWED	—
1	1	0	NTSC (NON DROP FRAME)	30
1	1	1	NTSC (DROP FRAME)	30

0 : LOW LEVEL
1 : HIGH LEVEL
X : DON'T CARE

TIMING CHART

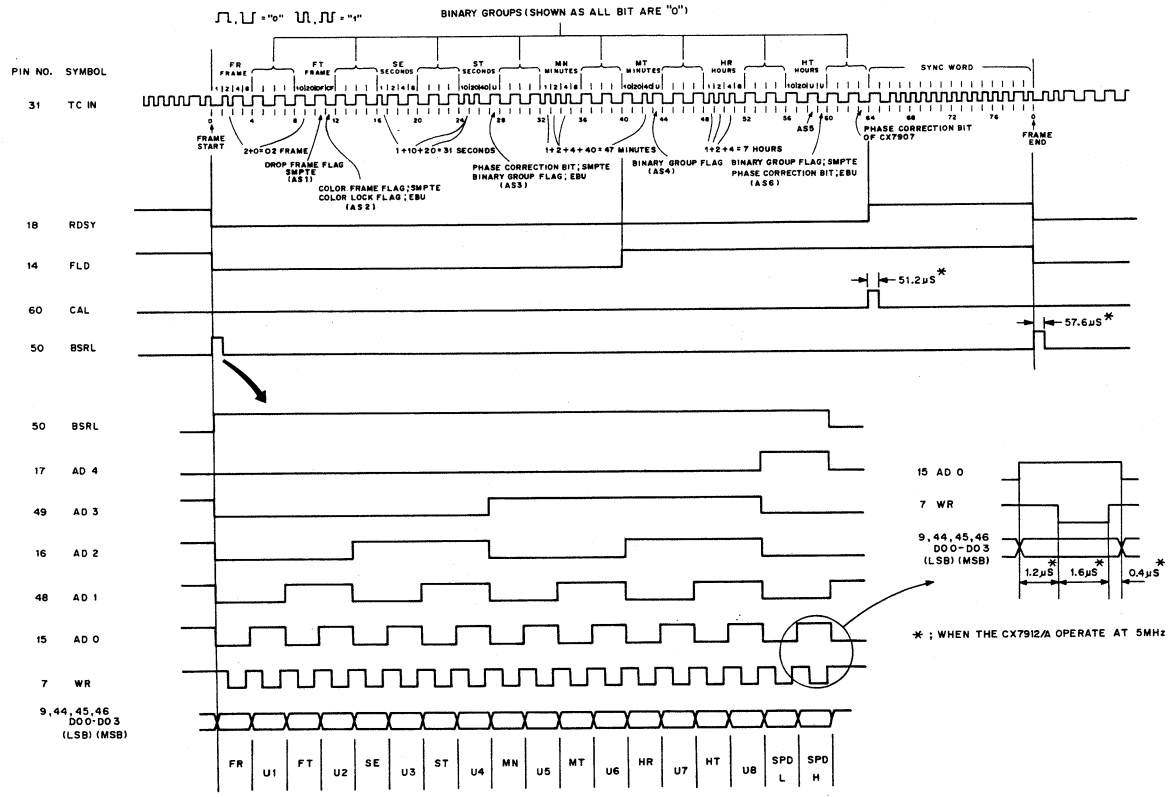

BLOCK DIAGRAM

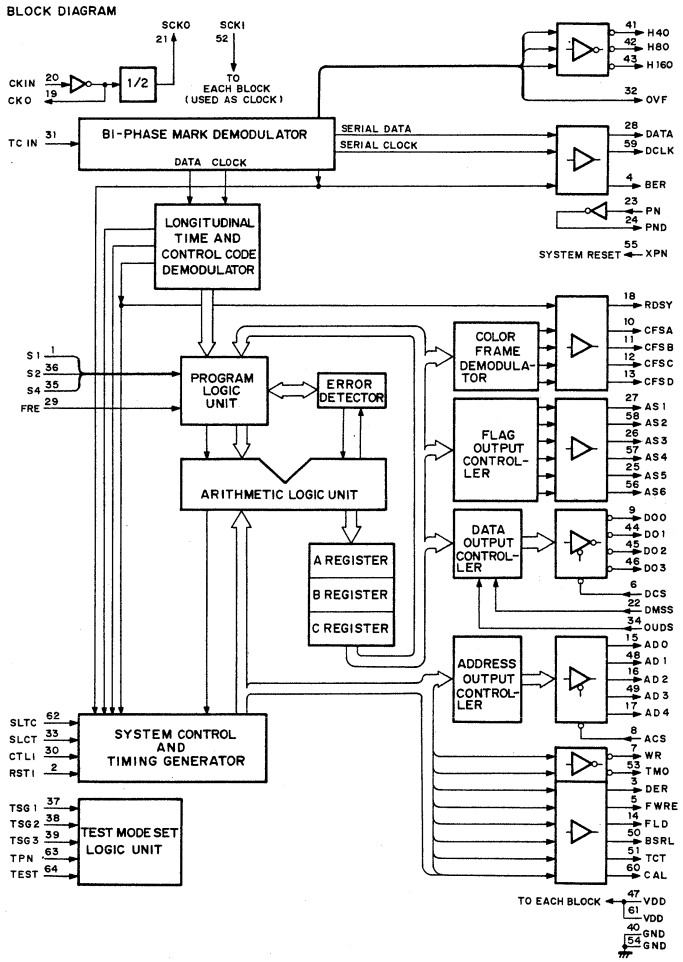

FUNCTIONAL PIN DEFINITION

Pin No.	SYMBOL	DESCRIPTION
8	ACS	ADDRESS LINE OUTPUT ENABLE (NEGATIVE-LOGIC)
15	AD0	ADDRESS DATA OUTPUT
48	AD1	
16	AD2	
49	AD3	
17	AD4	
27	AS1	PARALLEL DATA OUTPUT
58	AS2	
26	AS3	
57	AS4	
25	AS5	
56	AS6	
4	BER	BI-PHASE MARK ERROR (BIT ERROR) OUTPUT
50	BSRL	DATA OUT FLAG OUTPUT
60	CAL	CALCULATE OUT FLAG OUTPUT
10	CFSA	DEMODULATED COLOR FRAME OUTPUT
11	CFSB	
12	CFSC	
13	CFSD	
20	CKIN	CLOCK INPUT
19	CKO	CLOCK OUTPUT (NEGATIVE-LOGIC)
30	CTLI	CTL SIGNAL INPUT (↓)
28	DATA	DEMODULATED SERIAL DATA OUTPUT
59	DCLK	DEMODULATED CLOCK OUTPUT
6	DCS	DATA LINE OUTPUT ENABLE (NEGATIVE-LOGIC)
3	DER	DEMODULATE DATA ERROR OUTPUT
22	DMSS	ASSIGNED DATA SELECT
9	DO0	DATA OUTPUT (NEGATIVE-LOGIC)
44	DO1	
45	DO2	
46	DO3	
14	FLD	FIELD DATA OUTPUT
29	FRE	CTL DIRECTION SIGNAL INPUT
5	FWRE	DEMODULATE DIRECTION SIGNAL OUTPUT
41	H40	SPEED RANGE FLAG 4 OUTPUT (NEGATIVE-LOGIC)
42	H80	SPEED RANGE FLAG 8 OUTPUT (NEGATIVE-LOGIC)
43	H160	SPEED RANGE FLAG 16 OUTPUT (NEGATIVE-LOGIC)
34	OUDS	ERROR BYPASS ON/OFF SELECT
32	OVF	OVERFLOW FLAG OUTPUT
23	PN	POWER ON SIGNAL INPUT
24	PND	POWER ON SIGNAL OUPUT (NEGATIVE-LOGIC)
18	RDSY	READ SYNC WORD DATA OUTPUT
2	RSTI	CTL TIMER RESET INPUT (↓)
1	S1	SIGNAL FORMAT SELECT S1
36	S2	SIGNAL FORMAT SELECT S2
35	S4	SIGNAL FORMAT SELECT S4
52	SCKI	SYSTEM CLOCK INPUT
21	SCKO	SYSTEM CLOCK OUTPUT
33	SLCT	SELECT CTL INPUT
62	SLTC	SELECT LTC INPUT
55	XPN	SYSTEM RESET SIGNAL INPUT (NEGATIVE-LOGIC)
31	TCIN	LONGITUDINAL TIME AND CONTROL CODE INPUT
51	TCT	INPUT SELECT FLAG OUTPUT
53	TMO	TIME OVER SIGNAL OUTPUT (NEGATIVE-LOGIC)
7	WR	WRITE SIGNAL OUTPUT (NEGATIVE-LOGIC)
47	VDD	POWER LINE (+5V)
61	VDD	
40	GND	GND LINE
54	GND	
64	TEST	TEST MODE SET INPUT (TO BE CONNECTED WITH GND)
63	TPN	
37	TSG1	
38	TSG2	
39	TSG3	

CX7913 (SONY)

C-MOS VITC (VERTICAL INTERVAL TIME CODE) READER

– TOP VIEW –

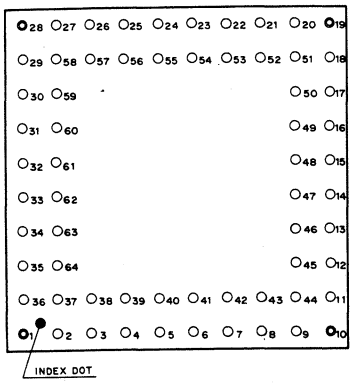

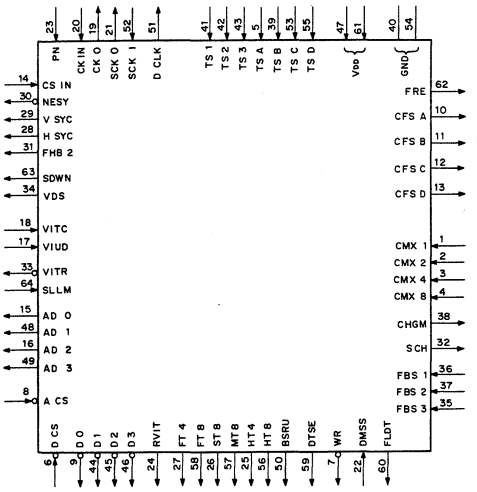

PIN NO.	IN	OUT	SYMBOL	PIN NO.	IN	OUT	SYMBOL	PIN NO.	IN	OUT	SYMBOL	PIN NO.	IN	OUT	SYMBOL
1	○		CMX 1	17	○		VIUD	33		○	VITR	49		○	AD 3
2	○		CMX 2	18	○		VITC	34		○	VDS	50		○	BSRU
3	○		CMX 4	19		○	CK O	35	○		FBS 3	51		○	D CLK
4	○		CMX 8	20	○		CK IN	36	○		FBS 1	52	○		SCK I
5	○		TS A	21		○	SCK O	37	○		FBS 2	53	○		TS C
6	○		D CS	22	○		DMSS	38		○	CHGM	54			GND
7		○	WR	23	○		PN	39	○		TS B	55	○		TS D
8	○		A CS	24		○	RVIT	40			GND	56		○	HT 8
9		○	D 0	25		○	HT 4	41	○		TS 1	57		○	MT 8
10		○	CFS A	26		○	ST 8	42	○		TS 2	58		○	FT 8
11		○	CFS B	27		○	FT 4	43	○		TS 3	59		○	DTSE
12		○	CFS C	28		○	H SYC	44		○	D 1	60		○	FLDT
13		○	CFS D	29		○	V SYC	45		○	D 2	61	○		Vdd(+5V)
14	○		CS IN	30		○	NESY	46		○	D 3	62		○	FRE
15		○	AD 0	31		○	FHB 2	47	○		Vdd(+5V)	63		○	SDWN
16		○	AD 2	32		○	SCH	48		○	AD 1	64	○		SLLM

TIMING CHART

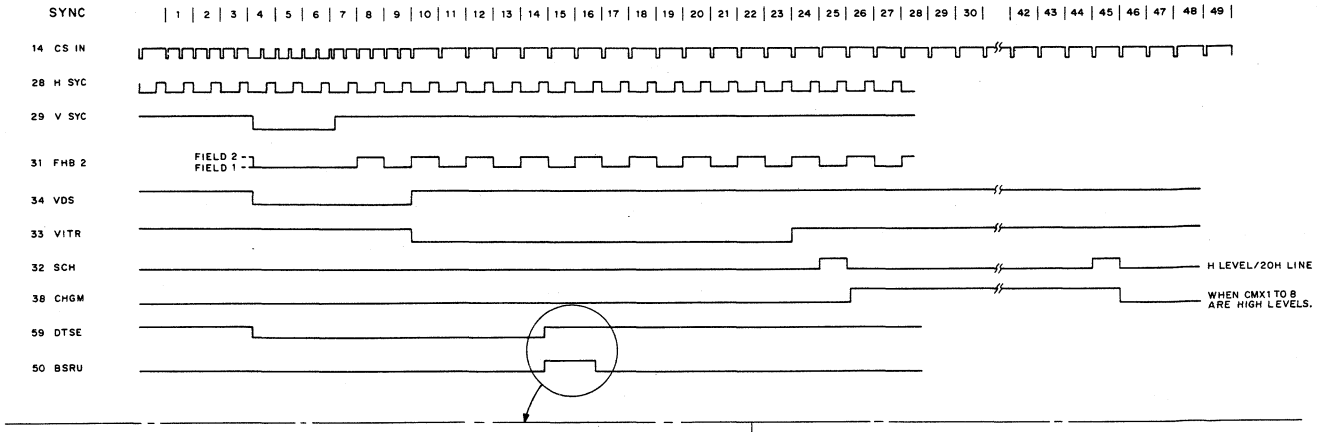

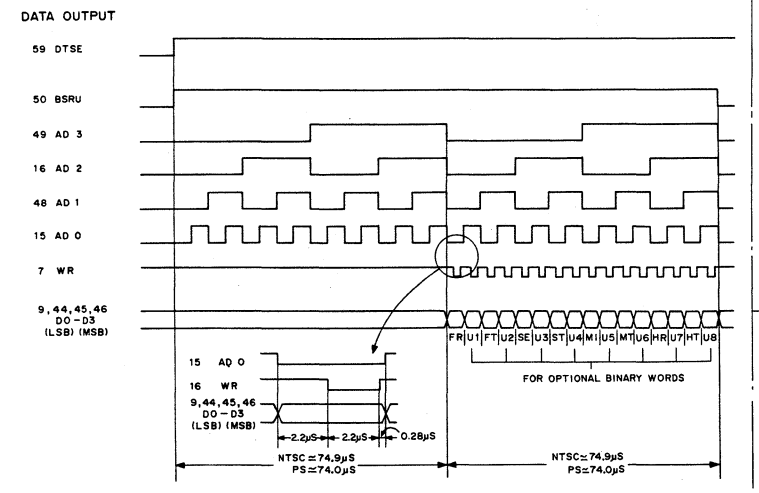

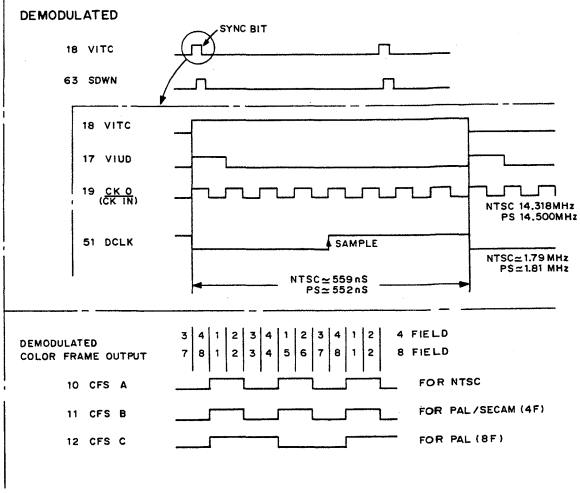

#36,37,35 FBS1-FBS3 FIELD BIT DATA SELECT

FBS 3	FBS 2	FBS 1	#60 FLDT OUTPUTS
0	0	0	FT 4
0	0	1	FT 8
0	1	0	ST 8
0	1	1	MT 8
1	0	0	HT 4
1	0	1	HT 8
1	1	0	—
1	1	1	—

#1,2,3,4 CHARACTER MIX TIMING SELECT

CMX 8	CMX 4	CMX 2	CMX 1	INSERTION LINES(#38 CHGM IS HIGH)	
				NTSC	PAL/SECAM
0	0	0	0	—	—
0	0	0	1	—	—
0	0	1	0	—	—
0	0	1	1	—	263~282, 575~594
0	1	0	0	246~265	243~262, 555~574
0	1	0	1	226~245	223~242, 535~554
0	1	1	0	206~225	203~222, 515~534
0	1	1	1	186~205	183~202, 495~514
1	0	0	0	166~185	163~182, 475~494
1	0	0	1	146~165	143~162, 455~474
1	0	1	0	126~145	123~142, 435~454
1	0	1	1	106~125	103~122, 415~434
1	1	0	0	86~105	83~102, 395~414
1	1	0	1	66~85	63~82, 375~394
1	1	1	0	46~65	43~62, 355~374
1	1	1	1	26~45	23~42, 335~354

NOTE 0 : LOW LEVEL
1 : HIGH LEVEL

FUNCTIONAL PIN DEFINITION

Pin No.	SYMBOL	DESCRIPTION
8	A CS	ADDRESS LINE CHIP SELECT INPUT (NEGATIVE-LOGIC)
15	AD 0	ADDRESS LINE
48	AD 1	
16	AD 2	
49	AD 3	
50	BSRU	DATA BUS OUTPUT STATE
10	CFS A	DEMODULATED COLOR FRAME OUTPUT
11	CFS B	
12	CFS C	
13	CFS D	
38	CHGM	CHARACTER MIX GATE SIG OUTPUT
20	CK IN	CLOCK IN
19	CK O	CLOCK OUT
1	CMX 1	CHARACTER MIX TIMING SELECT INPUT
2	CMX 2	
3	CMX 4	
4	CMX 8	
14	CS IN	COMPOSITE SYNC (C SYNC) INPUT
51	D CLK	DATA SAMPLING CLOCK OUTPUT
6	D CS	DATA LINE CHIP SELECT (NEGATIVE-LOGIC)
22	DMSS	DATA MIX/SEPARATE SELECT INPUT
9	D 0	PARALLEL OUTPUT DATA LINE (NEGATIVE-LOGIC)
44	D 1	
45	D 2	
46	D 3	
59	DTSE	VALID DATA OUTPUT STATE
36	FBS 1	FIELD BIT DATA SELECT
37	FBS 2	
35	FBS 3	
31	FHB 2	1/2 H SYNC OUTPUT
60	FLDT	FIELD BIT DATA OUTPUT
62	FRE	FORWARD/REVERSE OUTPUT (LOW LEVEL; FORWARD)
27	FT 4	SPECIFIED BIT DATA OUTPUT
58	FT 8	
28	H SYC	H SYNC OUTPUT
25	HT 4	SPECIFIED BIT DATA OUTPUT
56	HT 8	
57	MT 8	
30	NESY	C SYNC INPUT STATE (NEGATIVE-LOGIC)
23	PN	RESET INPUT
24	RVIT	SERIAL OUTPUT DATA LINE
32	SCH	CHARACTER MIX GATE OUTPUT
21	SCK O	SYSTEM CLOCK OUTPUT (1/16 CLOCK)
52	SCK I	SYSTEM CLOCK INPUT
63	SDWN	INTERNAL SYNC OUTPUT
64	SLLM	READ SIZE SELECT
26	ST 8	SPECIFIED BIT DATA OUTPUT
34	VDS	INTERNAL SYNC OUTPUT
18	VITC	CLIPPED VIDEO INPUT
33	VITR	VITC READ STATE OUTPUT (NEGATIVE-LOGIC)
17	VIUD	CLIPPED VIDEO EDGE INPUT
29	V SYC	V SYNC OUTPUT
7	WR	WRITE SIGNAL OUTPUT (NEGATIVE-LOGIC)
47	VDD	DC +5V SUPPLY
61	VDD	
40	GND	GROUND REFERENCE
54	GND	
41	TS 1	TEST INPUT (CONNECT WITH GND)
42	TS 2	
43	TS 3	
5	TS A	
39	TS B	
53	TS C	
55	TS D	

CX7913A (SONY)
C-MOS VITC (VERTICAL INTERVAL TIME CODE) READER
— TOP VIEW —

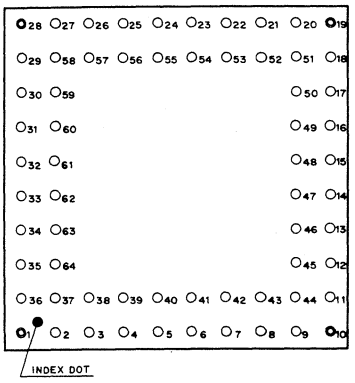

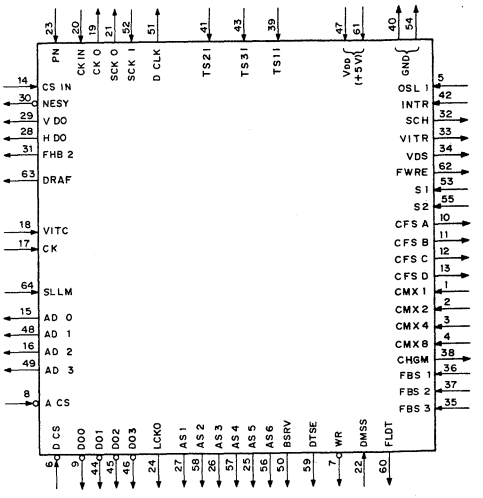

PIN NO.	IN	OUT	SYMBOL	PIN NO.	IN	OUT	SYMBOL	PIN NO.	IN	OUT	SYMBOL	PIN NO.	IN	OUT	SYMBOL
1	○		CMX 1	17	○		CK	33		○	VITR	49		○	AD 3
2	○		CMX 2	18	○		VITC	34		○	VDS	50		○	BSRV
3	○		CMX 4	19		○	CK O	35	○		FBS 3	51		○	D CLK
4	○		CMX 8	20	○		CK IN	36	○		FBS 1	52	○		SCK I
5	○		OSL 1	21		○	SCK O	37	○		FBS 2	53	○		S1
6	○		D CS	22	○		DMSS	38		○	CHGM	54		○	GND
7		○	WR	23	○		PN	39	○		TS1I	55	○		S2
8	○		A CS	24		○	LCKO	40		○	GND	56		○	AS6
9		○	DO 0	25		○	AS5	41	○		TS2I	57		○	AS4
10		○	CFS A	26		○	AS3	42	○		INTR	58		○	AS2
11		○	CFS B	27		○	AS1	43	○		TS3I	59		○	DTSE
12		○	CFS C	28		○	HDO	44		○	DO 1	60		○	FLDT
13		○	CFS D	29		○	VDO	45		○	DO 2	61	○		VDD(+5V)
14	○		CS IN	30		○	NESY	46		○	DO 3	62		○	FWRE
15		○	AD 0	31		○	FHB 2	47	○		VDD(+5V)	63		○	DRAF
16		○	AD 2	32		○	SCH	48		○	AD 1	64	○		SLLM

BLOCK DIAGRAM

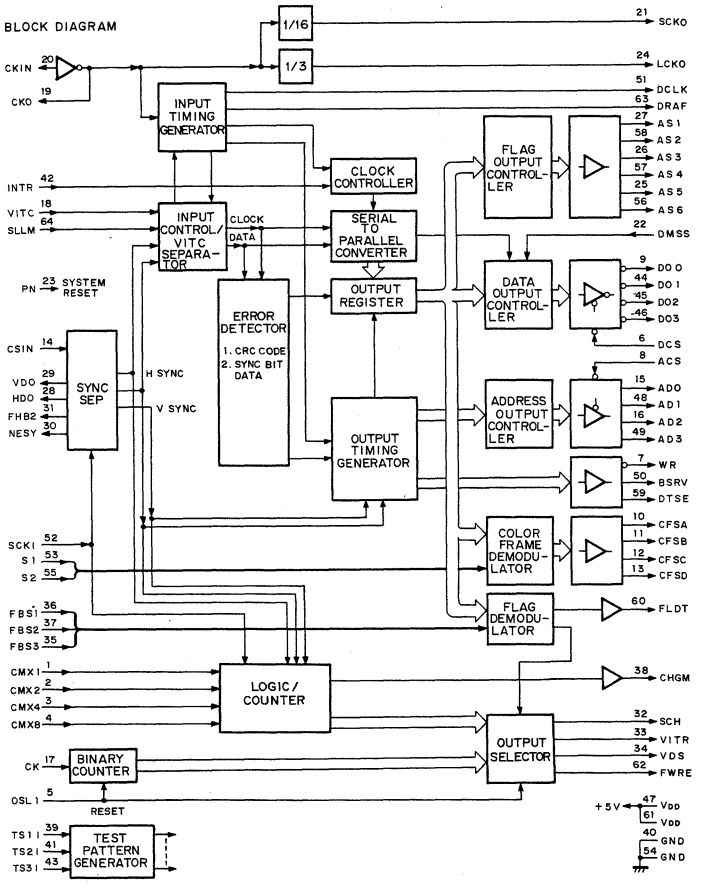

FUNCTIONAL PIN DEFINITION

Pin No.	SYMBOL	DESCRIPTION
8	ACS	ADDRESS LINE ENABLE INPUT
15	AD0	ADDRESS DATA OUTPUT
48	AD1	
16	AD2	
49	AD3	
27	AS1	PARALLEL DATA OUTPUT
58	AS2	
26	AS3	
57	AS4	
25	AS5	
56	AS6	
50	BSRV	DATA OUT FLAG OUTPUT
10	CFSA	DEMODULATED COLOR FRAME OUTPUT
11	CFSB	
12	CFSC	
13	CFSD	
38	CHGM	CHARACTER V POSITION GATE SIGNAL OUTPUT
17	CK	INTERNAL COUNTER CLOCK INPUT
20	CKIN	CLOCK INPUT
19	CKO	CLOCK OUTPUT (NEGATIVE-LOGIC)
1	CMX1	CHARACTER V POSITION SELECT INPUT
2	CMX2	
3	CMX4	
4	CMX8	
14	CSIN	COMPOSITE SYNC INPUT
51	DCLK	VITC READ CLOCK OUTPUT
6	DCS	DATA LINE ENABLE INPUT
22	DMSS	ASSIGNED BIT DATA SELECT INPUT
9	DO0	DATA OUT (NEGATIVE-LOGIC)
44	DO1	
45	DO2	
46	DO3	
63	DRAF	VITC SYNCHRONIZE SIGNAL D OUTPUT
59	DTSE	VITC DATA SEARCH FLAG OUTPUT
36	FBS1	FIELD MARK POSITION SELECT 1 INPUT
37	FBS2	FIELD MARK POSITION SELECT 2 INPUT
35	FBS3	FIELD MARK POSITION SELECT 3 INPUT
31	FHB2	FH/2 SIGNAL OUTPUT
60	FLDT	FIELD DATA OUTPUT
62	FWRE	TAPE DIRECTION SIGNAL OUTPUT
28	HDO	HORIZONTAL SYNC DRIVE OUTPUT
42	INTR	INTERRUPT REQUEST INPUT
24	LCKO	LTC CLOCK OUTPUT
30	NESY	LOST-SYNC FLAG OUTPUT
5	OSL1	OUTPUT SIGNAL SELECT 1 INPUT
23	PN	POWER ON RESET INPUT
53	S1	SIGNAL FORMAT SELECT S1 INPUT
55	S2	SIGNAL FORMAT SELECT S2 INPUT
32	SCH	OUTPUT SIGNAL SCH
52	SCKI	SYSTEM CLOCK INPUT
21	SCKO	SYSTEM CLOCK OUTPUT
64	SLLM	READ SIZE SELECT INPUT
29	VDO	VERTICAL SYNC DRIVE OUTPUT
34	VDS	OUTPUT SIGNAL VDS
18	VITC	VITC SIGNAL INPUT
33	VITR	OUTPUT SIGNAL VITR
7	WR	WRITE SIGNAL OUTPUT (NEGATIVE-LOGIC)
47	VDD	POWER LINE (+5V)
61	VDD	
40	GND	GND LINE
54	GND	
39	TS1I	TEST INPUT
41	TS2I	
43	TS3I	

#1,2,3,4 CMX1 TO 8;CHARACTER V POSITION SELECT

CMX8	CMX4	CMX2	CMX1	INSERTION LINE (#38 CHGM IS H LEVEL) NTSC	PAL,SECAM
0	0	0	0	---	---
0	0	0	1	---	284-303 596-615
0	0	1	0	---	264-283 576-595
0	0	1	1	---	244-263 556-575
0	1	0	0	227-246	224-243 536-555
0	1	0	1	207-226	204-223 516-535
0	1	1	0	187-206	184-203 496-515
0	1	1	1	167-186	164-183 476-495
1	0	0	0	147-166	144-163 456-475
1	0	0	1	127-146	124-143 436-455
1	0	1	0	107-126	104-123 416-435
1	0	1	1	87-106	84-103 396-415
1	1	0	0	67- 86	64- 83 376-395
1	1	0	1	47- 66	44- 63 356-375
1	1	1	0	27- 46	24- 43 336-355
1	1	1	1	---	---

#36,37,35 FBS1 TO FBS3;FIELD DATA SELECT

FBS3	FBS2	FBS1	#60 FLDT OUTPUT
0	0	0	AS1 (VITC BIT No.14)
0	0	1	AS2 (VITC BIT No.15)
0	1	0	AS3 (VITC BIT No.35)
0	1	1	AS4 (VITC BIT No.55)
1	0	0	AS5 (VITC BIT No.74)
1	0	1	AS6 (VITC BIT No.75)
1	1	0	------
1	1	1	------

#53,55 S1,S2;SIGNAL FORMAT SELECT

S2	S1	#13 CFSD FORMAT
0	0	UNSPECIFIED
0	1	
1	0	NTSC NON DROP FRAME
1	1	NTSC DROP FRAME

0;LOW LEVEL
1;HIGH LEVEL

TIMING CHART

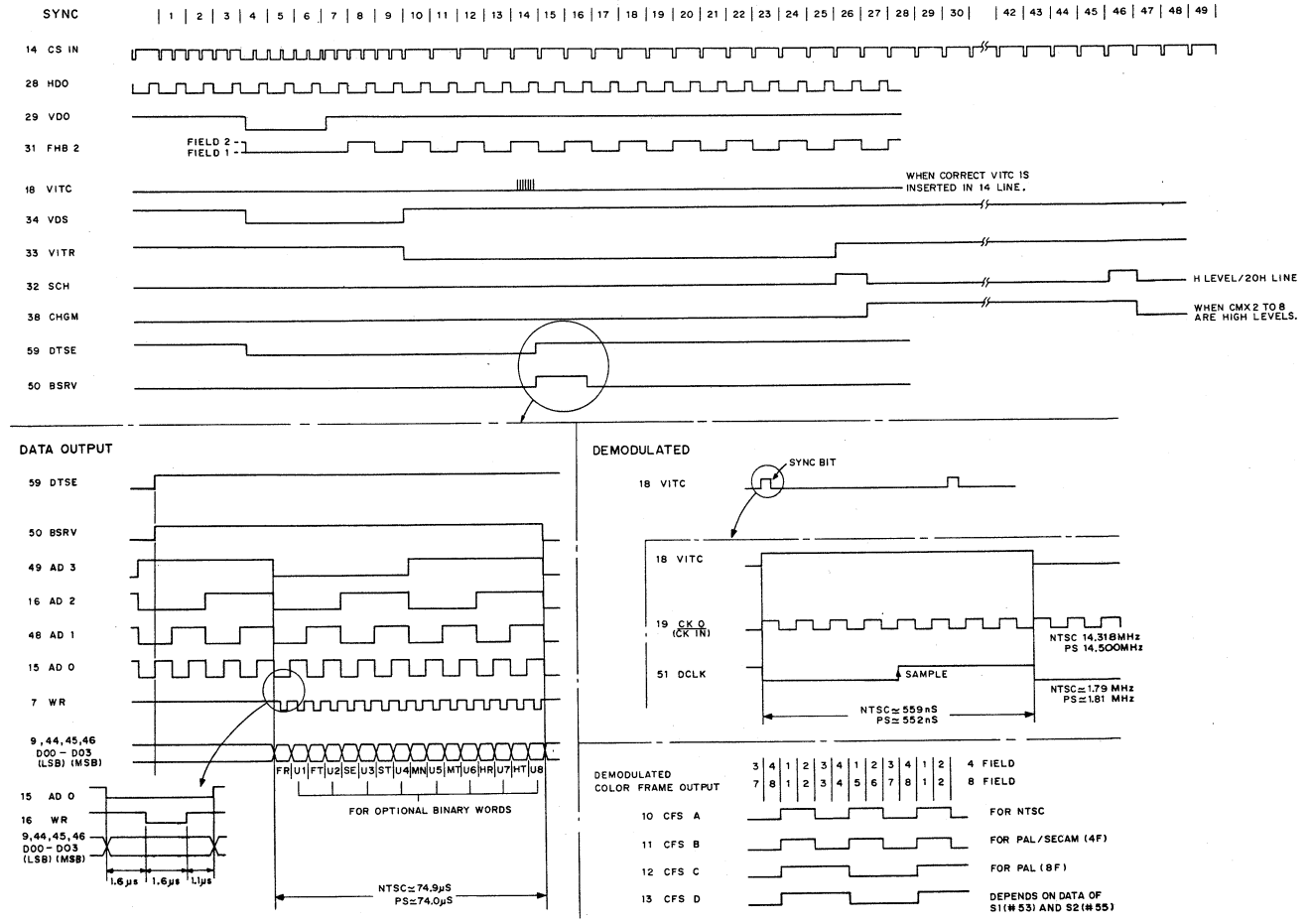

DAC-IC8BC (DATEL)
8-BIT DIGITAL-TO-ANALOG CONVERTER
-TOP VIEW-

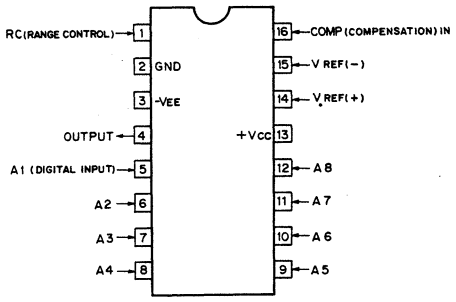

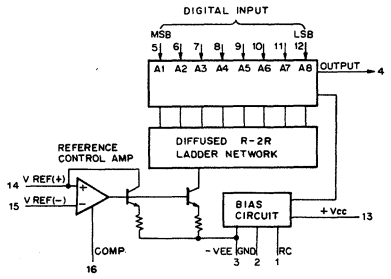

FT5709M (FUJITSU)
TRANSISTOR ARRAY

—TOP VIEW—

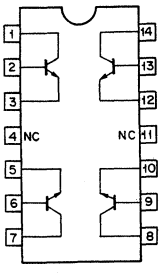

HA17458GS (HITACHI)
OPERATIONAL AMPLIFIER
— TOP VIEW —

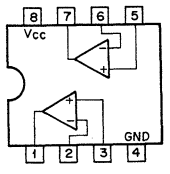

HA17741GS (HITACHI)
OPERATIONAL AMPLIFIER
—TOP VIEW—

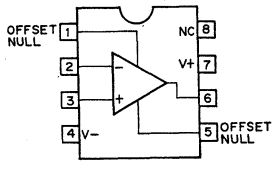

HI1-201 (HARRIS)
C-MOS ANALOG SWITCH
-TOP VIEW-

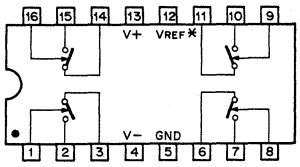

CONT IN	SW
0	
1	

0 ; LOW LEVEL
1 ; HIGH LEVEL

* NOTE

INTERFACE	VREF CONNECTION
TTL	OPEN
C-MOS	VDD ≦ 5.5V ; OPEN
	VDD > 5.5V ; TO VDD

HM6116LP-2 (HITACHI) (ACCESS TIME = 120 nS)
HM6116LP-3 (HITACHI) (ACCESS TIME = 150 nS)
HM6116LP-4 (HITACHI) (ACCESS TIME = 200 nS)
MSM5128-12RS (OKI) (ACCESS TIME = 120 nS)
MSM5128-15RS (OKI) (ACCESS TIME = 150 nS)
MSM5128-20RS (OKI) (ACCESS TIME = 200 nS)
C-MOS 16384(2048x8)-BIT HIGH SPEED STATIC RAM
— TOP VIEW —

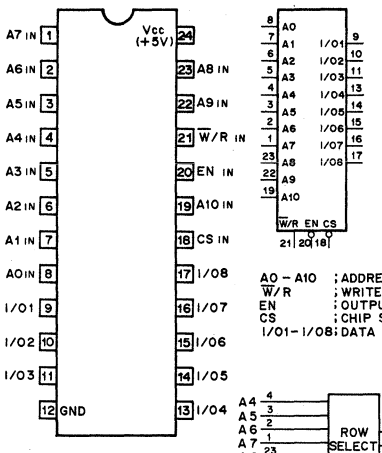

INPUTS CS	W/R	EN	FUNCTION
0	0	X	WRITE
0	1	0	READ
0	1	1	DISABLE (OUTPUT=HI-Z)
1	X	X	DISABLE (OUTPUT=HI-Z)

0 ; LOW LEVEL
1 ; HIGH LEVEL
X ; DON'T CARE
HI-Z ; HIGH IMPEDANCE

A0 - A10 ; ADDRESS INPUTS
W/R ; WRITE / READ ENABLE
EN ; OUTPUT ENABLE
CS ; CHIP SELECT
I/01 - I/08 ; DATA INPUTS / OUTPUTS

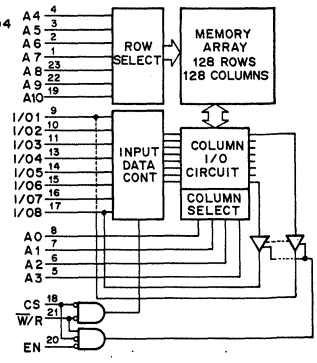

LH0080 (SHARP)
LH0080A (SHARP)
μPD780C (NEC)
μPD780C-1 (NEC)
Z80 (ZILOG)
Z80A (ZILOG)
N-MOS 8-BIT MICROPROCESSOR
— TOP VIEW —

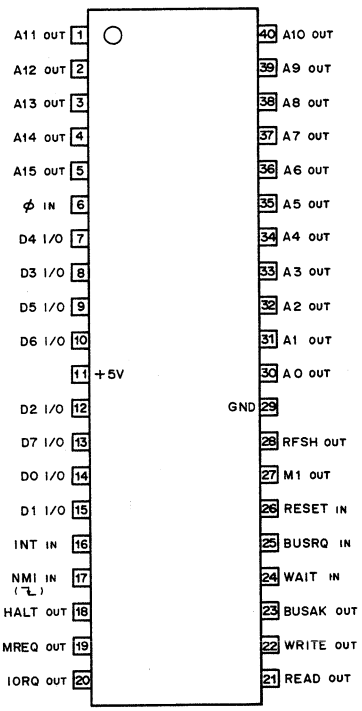

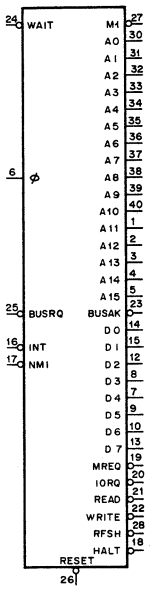

LH0082 (SHARP)
LH0082A (SHARP)
Z80-CTC (ZILOG)
Z80A-CTC (ZILOG)
N-MOS COUNTER TIMER CIRCUIT
— TOP VIEW —

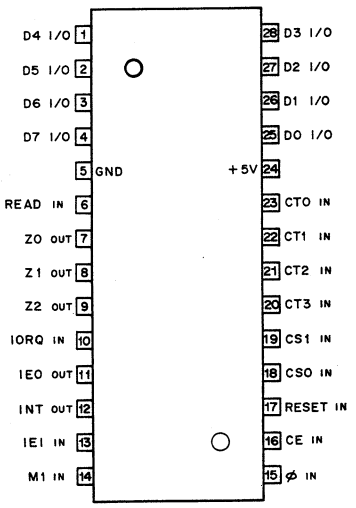

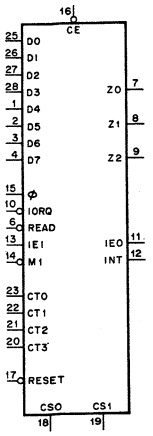

φ ; SYSTEM CLOCK
CE ; CHIP ENABLE
CSO, CS1 ; CHANNEL SELECT
CTO-CT3 ; EXTERNAL CLOCK/TIMER TRIGGER
DO-D7 ; 3-STATE DATA INPUT/OUTPUT
IEI ; INTERRUPT ENABLE INPUT
IEO ; INTERRUPT ENABLE OUTPUT
INT ; INTERRUPT REQUEST (OPEN DRAIN)
IORQ ; I/O REQUEST
M1 ; MACHINE CYCLE 1
READ ; READ CYCLE STATUS
ZO-Z2 ; ZERO COUNT/TIME OUT

CHANNEL SELECT FUNCTION

CS1	CSO	SELECTED CHANNEL
0	0	0
0	1	1
1	0	2
1	1	3

0; LOW LEVEL
1; HIGH LEVEL

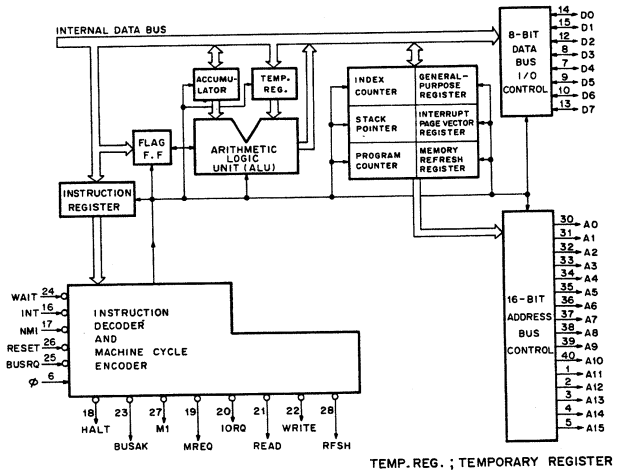

TEMP. REG. ; TEMPORARY REGISTER

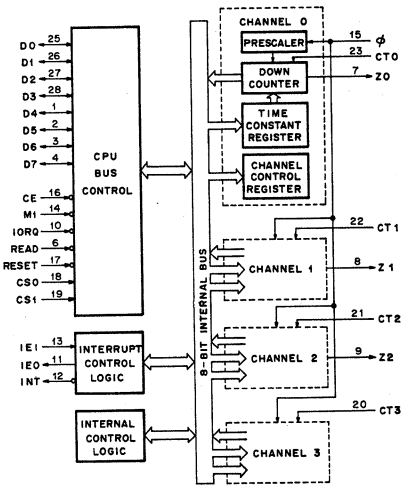

φ ; CLOCK
AO-A15 ; 3-STATE ADDRESS OUTPUT
BUSAK ; BUS ACKNOWLEDGE
BUSRQ ; BUS REQUEST
DO-D7 ; 3-STATE DATA INPUT/OUTPUT
HALT ; HALT STATE
INT ; INTERRUPT REQUEST
IORQ ; 3-STATE I/O REQUEST
M1 ; MACHINE CYCLE 1
MREQ ; 3-STATE MEMORY REQUEST
NM1 ; NON-MASKABLE INTERRUPT (DOWN EDGE TRIGGER)
READ ; 3-STATE MEMORY READ
RFSH ; REFRESH
WRITE ; 3-STATE MEMORY WRITE

LH0084 (SHARP)
LH0084A (SHARP)
Z80-SIO/0 (ZILOG)
Z80A-SIO/0 (ZILOG)
N-MOS 2-CHANNEL SERIAL INPUT/OUTPUT FOR MICROCOMPUTER SYSTEM
— TOP VIEW—

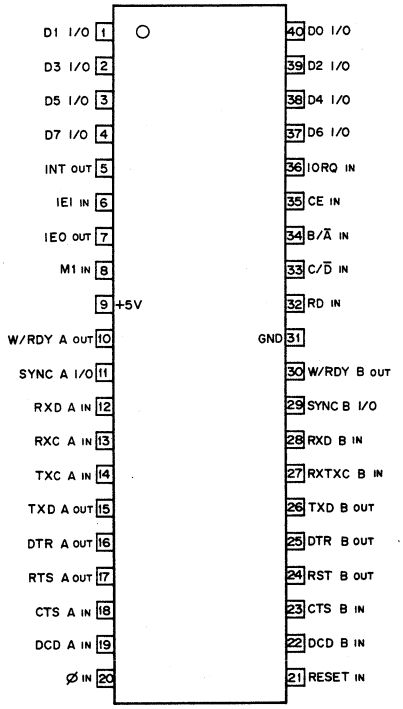

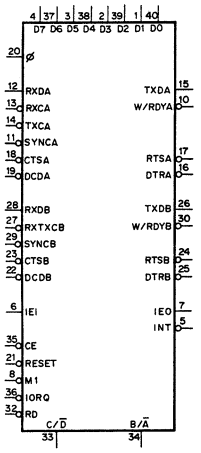

CHANNEL SELECT FUNCTION TABLE

C/D̄	B/Ā	FUNCTION
0	0	CH-A DATA
0	1	CH-B DATA
1	0	CH-A CONT. WORD
1	1	CH-B CONT. WORD

0; LOW LEVEL
1; HIGH LEVEL

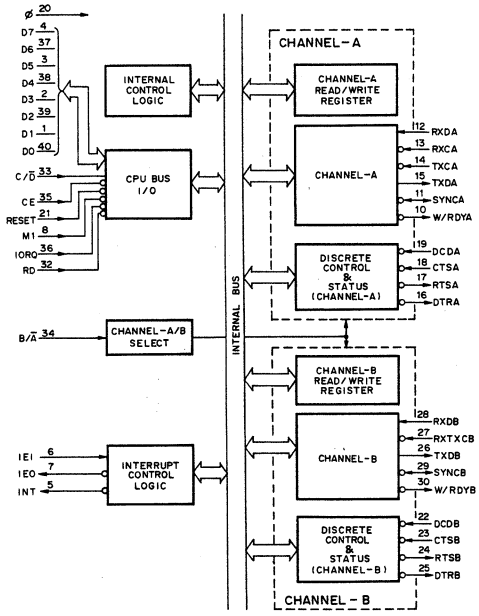

Ø ; SYSTEM CLOCK IN
D7-D0 ; DATA I/O
C/D̄ ; CONTROL/DATA SELECT IN
CE ; CHIP ENABLE IN
M1 ; MACHINE CYCLE 1 IN
IORQ ; I/O REQUEST IN
RD ; READ IN
B/Ā ; CHANNEL B/A SELECT IN
IEI ; INTERRUPT ENABLE IN
IEO ; INTERRUPT ENABLE OUT
INT ; INTERRUPT OUT

RXD ; RECEIVE DATA IN
RXC ; RECEIVE CLOCK IN
TXC ; TRANSMIT CLOCK IN
TXD ; TRANSMIT DATA OUT
SYNC ; EXTERNAL CHARACTER SYNCHRONIZATION I/O
W/RDY ; WAIT/READY OUT
DCD ; DATA CARRIER DETECT IN
CTS ; CLEAR TO SEND IN
RTS ; REQUEST TO SEND OUT
DTR ; DATA TERMINAL READY OUT

M54516P (MITSUBISHI)
INVERTER WITH OPEN-COLLECTOR
(DARLINGTON-CONNECTED TRANSISTOR ARRAY)
— TOP VIEW —

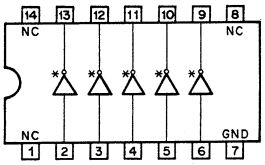

M54517P (MITSUBISHI)
INVERTER WITH OPEN-COLLECTOR
(DARLINGTON-CONNECTED TRANSISTOR ARRAY)
— TOP VIEW —

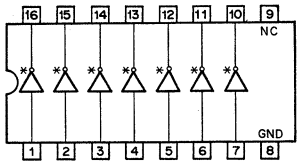

MB3759 (FUJITSU)
PWM POWER CONTROL
—TOP VIEW—

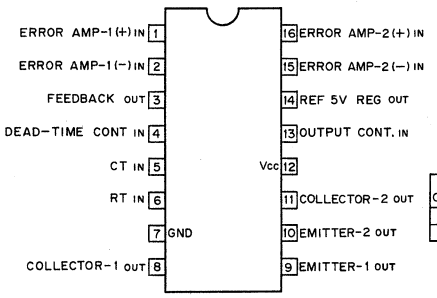

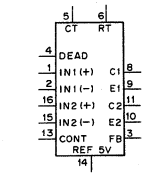

OUTPUT CONTROL	OUTPUT FUNCTION
0	PARALLEL
1	PUSH-PULL

0 ; GROUNDED
1 ; CONNECTED TO PIN 14

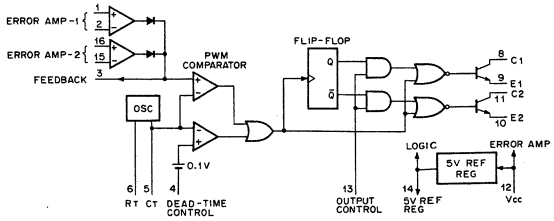

MB8168-45 (FUJITSU) (ACCESS TIME = 45 nS)
MB8168-55 (FUJITSU) (ACCESS TIME = 55 nS)
MB8168-70 (FUJITSU) (ACCESS TIME = 70 nS)
MB8168-90 (FUJITSU) (ACCESS TIME = 90 nS)
N-MOS 16384-BIT(4096x4) STATIC RAM
— TOP VIEW —

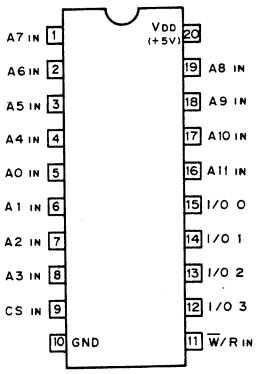

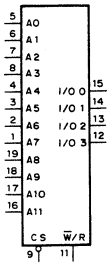

INPUTS		MODE
CS	W/R	
0	0	WRITE
0	1	READ
1	X	DISABLE (OUTPUT;HI-Z)

0 ; LOW LEVEL
1 ; HIGH LEVEL
X ; DON'T CARE
HI-Z ; HIGH IMPEDANCE

A0~A11 ;ADDRESS INPUTS
I/O0~I/O3;DATA INPUTS/OUTPUTS
CS ;CHIP SELECT INPUT
W/R ;WRITE/READ ENABLE INPUT

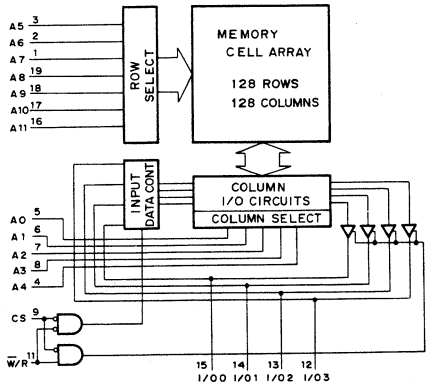

MB8747 (FUJITSU)
C-MOS SERIAL TO/FROM PARALLEL CONVERTER WITH OSCILLATOR
— TOP VIEW —

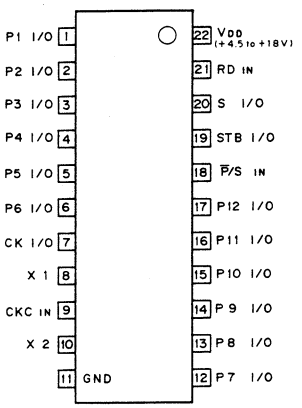

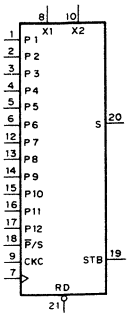

P1 to P12 ; PARALLEL DATA IN/OUT
CK ; CLOCK IN/OUT
CKC ; CLOCK I/O CONTROL IN
X1,X2 ; X'TAL
P/S ; PARALLEL/SERIAL CONTROL IN
STB ; STROBE
S ; SERIAL DATA IN/OUT

CKC	CK
0	OUT
1	IN

RD	P/S	MODE	P1toP12	S	STB
0	0	OPEN	IN	HI-Z	OUT
0	1	RESET	0	IN	IN
1	0	P→S	IN	OUT	OUT
1	1	S→P	OUT	IN	IN

0 ; LOW LEVEL
1 ; HIGH LEVEL
HI-Z ; HIGH IMPEDANCE
P→S ; PARALLEL→SERIAL CONV
S→P ; SERIAL→PARALLEL CONV

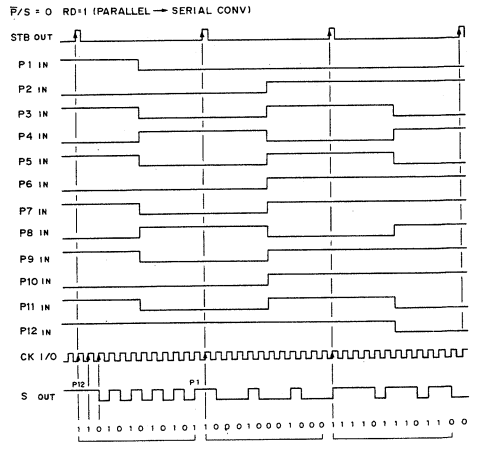

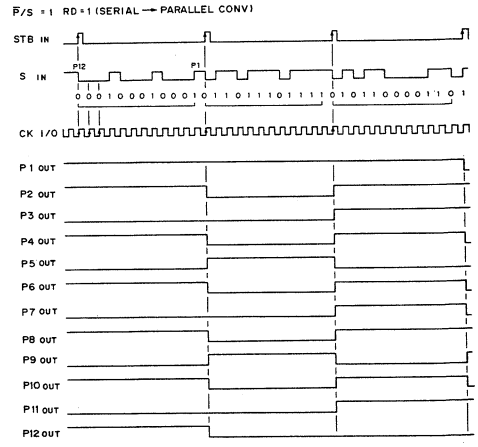

MC1595L (MOTOROLA)
LINEAR MULTIPLIER

—TOP VIEW—

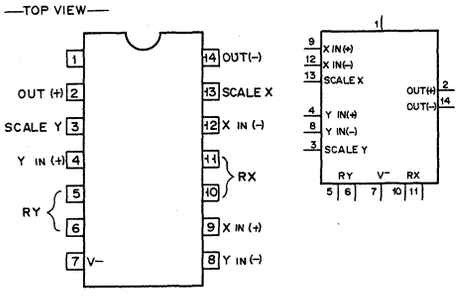

MC10105L (MOTOROLA)
HD10105 (HITACHI)
ECL 2-3-2-INPUT OR/NOR GATE

—TOP VIEW—

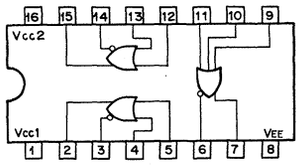

MC10115L (MOTOROLA)
ECL LINE RECEIVER
— TOP VIEW —

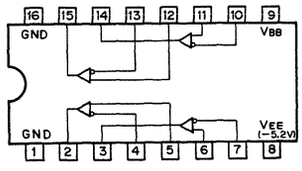

MC10116L (MOTOROLA)
HD10116 (HITACHI)
ECL DIFFERENTIAL OR/NOR LINE RECEIVER

–TOP VIEW–

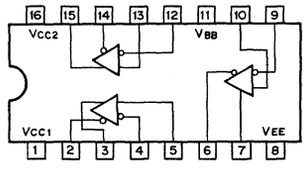

MC10117L(MOTOROLA)
HD10117 (HITACHI)
ECL 2-WIDE 2-3-INPUT OR-AND/OR-AND-INVERT GATE

—TOP VIEW—

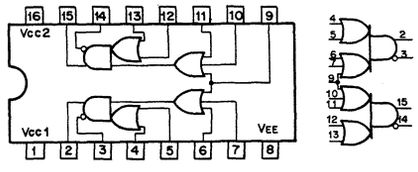

MC10124L (MOTOROLA)
HD10124 (HITACHI)
ECL TTL-TO-ECL TRANSLATOR
— TOP VIEW —

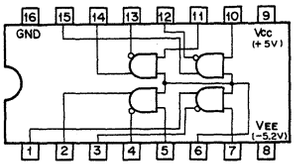

MC10125L (MOTOROLA)
HD10125 (HITACHI)
ECL ECL-TO-TTL TRANSLATOR
— TOP VIEW —

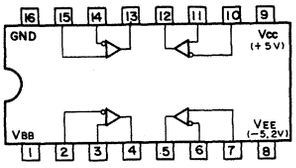

MC10131L (MOTOROLA)
HD10131 (HITACHI)
ECL D-TYPE FLIP FLOP

—TOP VIEW—

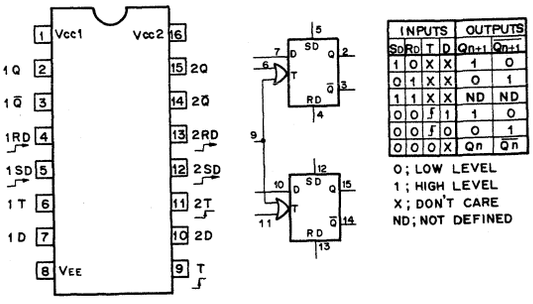

INPUTS				OUTPUTS	
SD	RD	T	D	Qn+1	Q̄n+1
1	0	X	X	1	0
0	1	X	X	0	1
1	1	X	X	ND	ND
0	0	↓	1	1	0
0	0	↓	0	0	1
0	0	0	X	Qn	Q̄n

0; LOW LEVEL
1; HIGH LEVEL
X; DON'T CARE
ND; NOT DEFINED

MC10198L (MOTOROLA)
RETRIGGERABLE MONOSTABLE MULTIVIBRATOR
— TOP VIEW —

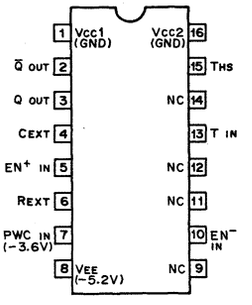

RETRIGGERABLE MMV

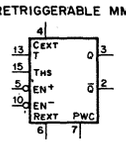

NON-RETRIGGERABLE MMV

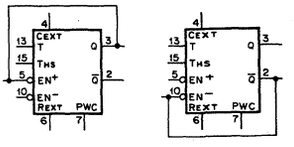

T : CLOCK TRIGGER INPUT
THS : HIGH-SPEED CLOCK TRIGGER INPUT
EN+ : TRIGGER POSITIVE ENABLE
EN– : TRIGGER NEGATIVE ENABLE
PWC : EXTERNAL PULSE WIDTH CONTROL

FUNCTION TABLE

EN+	EN–	TRIG. SLOPE
0	0	↓
0	1	↓
1	0	↑
1	1	DISABLE

0; LOW LEVEL
1; HIGH LEVEL

OUTPUT PULSE WIDTH : PWQ
PWQ = 1.19 · CEXT (REXT + 284)
WHERE
PWQ = SEC
CEXT = FARADS
REXT = OHMS
VEE = –5.2V
PWC = –3.6V

NOTE; · SELECT REXT RANGING FROM ZERO TO 16K OHMS.
· SELECT CEXT GREATER THAN 20PF.

NE527H(SIGNETICS)
VOLTAGE COMPARATOR

—BOTTOM VIEW—

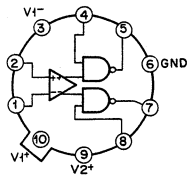

NJM2903D (JRC)
OPERATIONAL AMPLIFIER
— TOP VIEW —

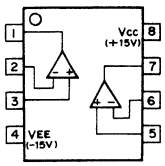

NJM4558D (JRC)
NJM4558DFA(JRC)
NJM4558DMD(JRC)
μPC4558C (NEC)
OPERATIONAL AMPLIFIER
-TOP VIEW-

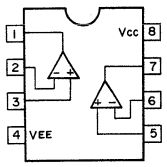

NJM4559D (JRC)
OPERATIONAL AMPLIFIER
-TOP VIEW-

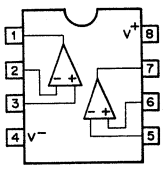

NJM4560D (JRC)
NJM4560DD (JRC)
NJM4560DN (JRC)
NJM4560DX (JRC)
OPERATIONAL AMPLIFIER
-TOP VIEW-

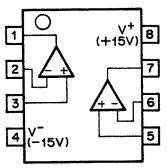

NJM78L??A (JRC)
VOLTAGE REGULATOR

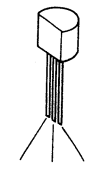

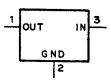

2V	NJM78L02A
5V	NJM78L05A
6V	NJM78L06A
8V	NJM78L08A
9V	NJM78L09A
12V	NJM78L12A
15V	NJM78L15A

SN7400N (TI)
M53200P (MITSUBISHI)
SN74S00N (TI)
SN74LS00N (TI)
HD74LS00P (HITACHI)
TTL NAND GATE
—TOP VIEW—

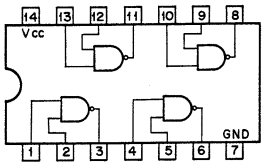

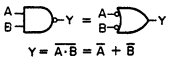

A	B	Y
0	0	1
0	1	1
1	0	1
1	1	0

0;LOW LEVEL
1;HIGH LEVEL

SN7402N (TI)
M53202P (MITSUBISHI)
SN74S02N (TI)
SN74LS02N (TI)
TTL 2-INPUT POSITIVE-NOR GATE
—TOP VIEW—

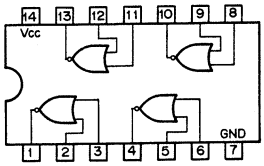

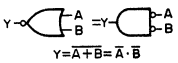

A	B	Y
0	0	1
0	1	0
1	0	0
1	1	0

0;LOW LEVEL
1;HIGH LEVEL

SN7403N (TI)
SN74L03N (TI)
SN74S03N (TI)
SN74LS03N(TI)
TTL 2-INPUT POSITIVE-NAND GATE
WITH OPEN-COLLECTOR
—TOP VIEW—

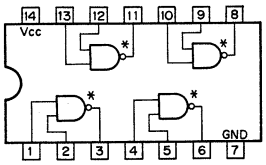

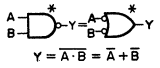

A	B	Y
0	0	1
0	1	1
1	0	1
1	1	0

0;LOW LEVEL
1;HIGH LEVEL

SN7404N (TI)
M53204P (MITSUBISHI)
SN74L04N (TI)
SN74S04N (TI)
SN74LS04N (TI)
HD74LS04P (HITACHI)
TTL INVERTER
—TOP VIEW—

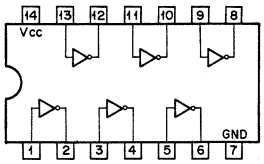

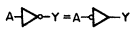

A	Y
0	1
1	0

0;LOW LEVEL
1;HIGH LEVEL

SN7405N (TI)
SN74LS05N (TI)
74LS05PC(FSC)
TTL INVERTER WITH OPEN-COLLECTOR
-TOP VIEW-

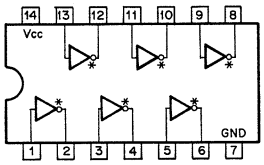

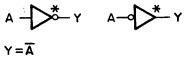

A	Y	
0	1	0;LOW LEVEL
1	0	1;HIGH LEVEL
		*;OPEN COLLECTOR

SN7406N (TI)
M53206P (MITSUBISHI)
TTL INVERTER BUFFER/DRIVER
WITH OPEN-COLLECTOR
—TOP VIEW—

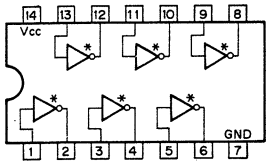

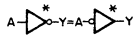

Y = $\overline{A}$

A	Y
0	1
1	0

0 ; LOW LEVEL
1 ; HIGH LEVEL
* ; OPEN COLLECTOR

SN7408N (TI)
SN74S08N (TI)
SN74LS08N (TI)
HD74LS08P (HITACHI)
TTL 2-INPUT POSITIVE-AND GATE
—TOP VIEW—

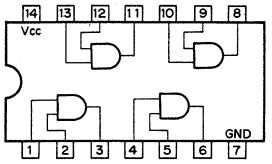

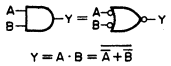

Y = A · B = $\overline{\overline{A}+\overline{B}}$

A	B	Y
0	0	0
0	1	0
1	0	0
1	1	1

0 ; LOW LEVEL
1 ; HIGH LEVEL

SN7410N (TI)
SN74L10N (TI)
SN74S10N (TI)
SN74LS10N (TI)
HD74LS10P (HITACHI)
TTL 3-INPUT POSITIVE NAND GATE
—TOP VIEW—

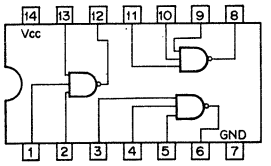

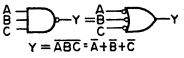

Y = $\overline{ABC}$ = $\overline{A}+\overline{B}+\overline{C}$

A	B	C	Y
0	0	0	1
0	0	1	1
0	1	0	1
0	1	1	1
1	0	0	1
1	0	1	1
1	1	0	1
1	1	1	0

0 : LOW LEVEL
1 : HIGH LEVEL

SN74H11N (TI)
SN74S11N (TI)
SN74LS11N (TI)
TTL 3-INPUT POSITIVE-AND GATE
—TOP VIEW—

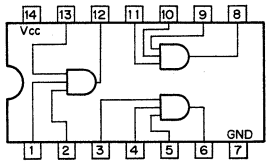

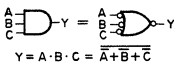

Y = A · B · C = $\overline{\overline{A}+\overline{B}+\overline{C}}$

A	B	C	Y
0	0	0	0
0	0	1	0
0	1	0	0
0	1	1	0
1	0	0	0
1	0	1	0
1	1	0	0
1	1	1	1

0 ; LOW LEVEL
1 ; HIGH LEVEL

SN7412N (TI)
SN74LS12N (TI)
TTL 3-INPUT POSITIVE-NAND GATE WITH OPEN-COLLECTOR OUTPUT
— TOP VIEW —

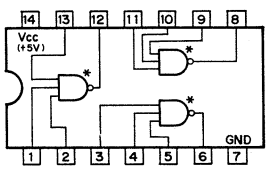

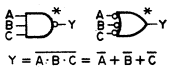

Y = A · B · C = $\overline{A}+\overline{B}+\overline{C}$

A	B	C	Y
0	0	0	1
0	0	1	1
0	1	0	1
0	1	1	1
1	0	0	1
1	0	1	1
1	1	0	1
1	1	1	0

0;LOW LEVEL
1;HIGH LEVEL

SN7414N (TI)
SN74LS14N (TI)
TTL SCHMITT TRIGGER INVERTER
—TOP VIEW—

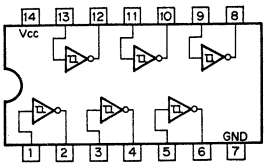

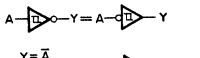

Y = $\overline{A}$

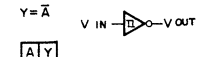

A	Y
0	1
1	0

0;LOW LEVEL
1;HIGH LEVEL

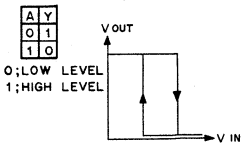

SN7414N-----0.9 1.7V
SN74LS14N---0.8 1.6V

SN7420N (TI)
SN74S20N (TI)
SN74LS20N (TI)
TTL 4-INPUT POSITIVE NAND GATE
—TOP VIEW—

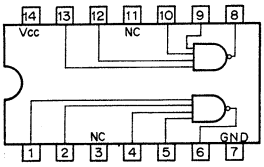

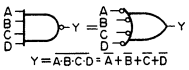

Y = $\overline{A \cdot B \cdot C \cdot D}$ = $\overline{A}+\overline{B}+\overline{C}+\overline{D}$

A	B	C	D	Y
0	0	0	0	1
0	0	0	1	1
0	0	1	0	1
0	0	1	1	1
0	1	0	0	1
:	:	:	:	:
1	1	0	1	1
1	1	1	0	1
1	1	1	1	0

0;LOW LEVEL
1;HIGH LEVEL

SN7427N (TI)
SN74LS27N (TI)
TTL 3-INPUT POSITIVE-NOR GATE
— TOP VIEW —

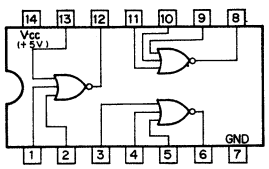

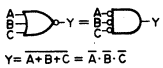

Y = $\overline{A+B+C}$ = $\overline{A} \cdot \overline{B} \cdot \overline{C}$

A	B	C	Y
0	0	0	1
0	0	1	0
0	1	0	0
0	1	1	0
1	0	0	0
1	0	1	0
1	1	0	0
1	1	1	0

0;LOW LEVEL
1;HIGH LEVEL

SN7430N (TI)
SN74S30N (TI)
SN74LS30N (TI)
HD74LS30P (HITACHI)
TTL 8-INPUT NAND GATE
—TOP VIEW—

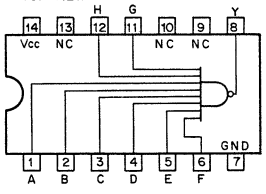

Y = $\overline{A \cdot B \cdot C \cdot D \cdot E \cdot F \cdot G \cdot H}$
= $\overline{A}+\overline{B}+\overline{C}+$ -------$+\overline{H}$

SN 7432N (TI)
SN 74S32N (TI)
SN 74LS32N (TI)
HD 74LS32P (HITACHI)
MB74LS32 (FUJITSU)
M74LS32P (MITSUBISHI)

TTL 2-INPUT POSITIVE-OR GATE
— TOP VIEW —

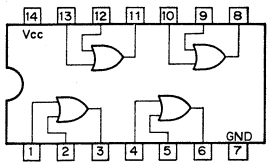

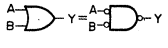

A	B	Y
0	0	0
0	1	1
1	0	1
1	1	1

0; LOW LEVEL
1; HIGH LEVEL

SN7474N (TI)
M53274P (MITSUBISHI)
SN74H74N (TI)
SN74L74N (TI)
SN74S74N (TI)
SN74LS74AN (TI)
HD74LS74P (HITACHI)

TTL D-TYPE FLIP FLOP WITH DIRECT SET/RESET
—TOP VIEW—

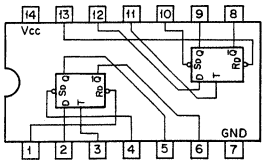

INPUTS				OUTPUTS	
Sd	Rd	T	D	Qn+1	$\overline{Qn+1}$
0	1	X	X	1	0
1	0	X	X	0	1
0	0	X	X	1*	1*
1	1	↑	1	1	0
1	1	↑	0	0	1
1	1	0	X	Qn	$\overline{Qn}$

0; LOW LEVEL
1; HIGH LEVEL
X; DON'T CARE
1*; NONSTABLE

SN7485N (TI)
SN74S85N (TI)
SN74LS85N (TI)

TTL 4-BIT MAGNITUDE COMPARATOR
— TOP VIEW —

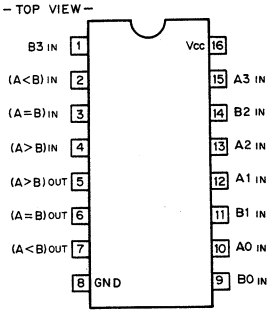

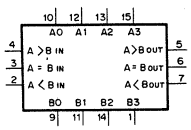

INPUTS									OUTPUTS		
DATA COMPARING					CASCADING						
	A3, B3	A2, B2	A1, B1	A0, B0	A<B	A=B	A>B	A<B	A=B	A>B
A>B	A3>B3	X	X	X	X	X	X	0	0	1
	A3=B3	A2>B2	X	X						
	A3=B3	A2=B2	A1>B1	X						
	A3=B3	A2=B2	A1=B1	A0>B0						
A=B	A3=B3	A2=B2	A1=B1	A0=B0	0	0	0	1	0	1
					0	0	1	0	0	1
					X	1	X	0	1	0
					1	0	0	1	0	0
					1	0	1	0	0	0
A<B	A3=B3	A2=B2	A1=B1	A0<B0	X	X	X	1	0	0
	A3=B3	A2=B2	A1<B1	X						
	A3=B3	A2<B2	X	X						
	A3<B3	X	X	X						

0; LOW LEVEL 1; HIGH LEVEL X; DON'T CARE

SN7486N (TI)
SN74S86N (TI)
SN74LS86N (TI)
HD74LS86P (HITACHI)

TTL EXCLUSIVE OR GATE
— TOP VIEW —

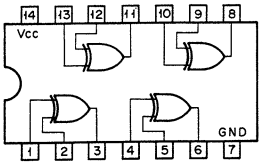

A	B	Y
0	0	0
0	1	1
1	0	1
1	1	0

0; LOW LEVEL
1; HIGH LEVEL

SN74LS107AN (TI)
HD74LS107P (HITACHI)

TTL J-K FLIP FLOP WITH DIRECT RESET
— TOP VIEW —

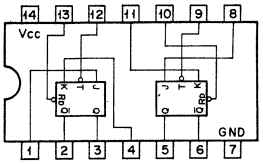

INPUTS				OUT
Rd	T	J	K	Qn+1
0	X	X	X	0
1	↓	0	0	Qn
1	↓	0	1	0
1	↓	1	0	1
1	↓	1	1	$\overline{Qn}$
1	1	X	X	Qn

0; LOW LEVEL
1; HIGH LEVEL
X; DON'T CARE

SN74S112N (TI)
SN74LS112AN (TI)

TTL J-K FLIP-FLOP WITH DIRECT SET/RESET
— TOP VIEW —

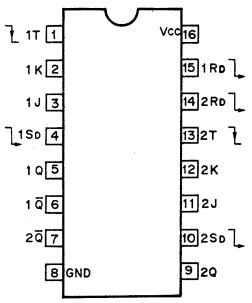

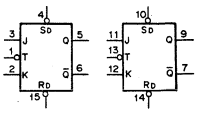

INPUTS					OUTPUTS	
SD	RD	T	J	K	Qn+1	$\overline{Qn+1}$
0	1	X	X	X	1	0
1	0	X	X	X	0	1
0	0	X	X	X	1*	1*
1	1	↓	0	0	Qn	$\overline{Qn}$
			0	1	0	1
			1	0	1	0
			1	1	$\overline{Qn}$	Qn
1	1	1	X	X	Qn	$\overline{Qn}$

0; LOW LEVEL X; DON'T CARE
1; HIGH LEVEL *; NONSTABLE

SN74120N (TI)

TTL PULSE SYNCHRONIZER/DRIVER
— TOP VIEW —

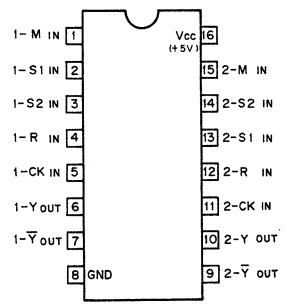

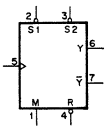

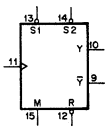

INPUT M	OUTPUT MODE
0	TRAIN OF PULSES
1	SINGLE PULSE

S1, S2; START COMMAND INPUTS
R; STOP COMMAND INPUT
M; MODE CONTROL INPUT
Y, $\overline{Y}$; SYNCHRONIZED PULSE OUTPUT

INPUTS			FUNCTION
R	S1	S2	
X	0	X	PASS OUTPUT PULSES
X	X	0	PASS OUTPUT PULSES
0	1	1	INHIBIT OUTPUT PULSES
1	↓	1	START OUTPUT PULSES
1	1	↓	START OUTPUT PULSES
↓	1	1	STOP OUTPUT PULSES
1	1	1	CONTINUE

0; LOW LEVEL
1; HIGH LEVEL
X; DON'T CARE

SN74123N (TI)
SN74L123N (TI)
SN74LS123N (TI)
SN74LS123NS(TI)
HD74LS123P (HITACHI)
TTL RETRIGGERABLE MONOSTABLE MULTIVIBRATOR WITH DIRECT RESET
—TOP VIEW—

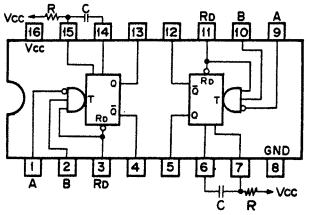

INPUTS			OUTPUTS	
Rd	A	B	Q	$\overline{Q}$
0	X	X	0	1
X	1	X	0	1
X	X	1	0	1
1	0	↑	⊓	⊔
1	↓	1	⊓	⊔
↑	0	1	⊓	⊔

0; LOW LEVEL
1; HIGH LEVEL
X; DON'T CARE

OUTPUT PULSE WIDTH

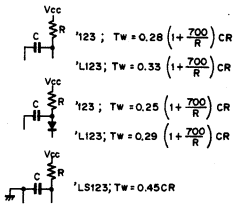

SN74S138N (TI)
SN74LS138N (TI)
HD74LS138P (HITACHI)
MB74LS138 (FUJITSU)
M74LS138P (MITSUBISHI)
TTL 3-TO-8-LINE DECODER/DEMULTIPLEXER
—TOP VIEW—

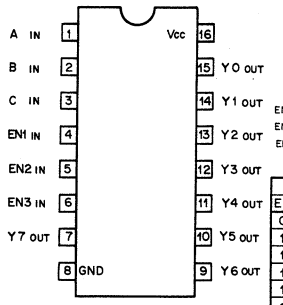

INPUTS				OUTPUTS							
EN	C	B	A	Y7	Y6	Y5	Y4	Y3	Y2	Y1	Y0
0	X	X	X	1	1	1	1	1	1	1	1
1	0	0	0	1	1	1	1	1	1	1	0
1	0	0	1	1	1	1	1	1	1	0	1
1	0	1	0	1	1	1	1	1	0	1	1
1	0	1	1	1	1	1	1	0	1	1	1
1	1	0	0	1	1	1	0	1	1	1	1
1	1	0	1	1	1	0	1	1	1	1	1
1	1	1	0	1	0	1	1	1	1	1	1
1	1	1	1	0	1	1	1	1	1	1	1

EN = $\overline{EN1} \cdot \overline{EN2} \cdot EN3$

0 ; LOW LEVEL
1 ; HIGH LEVEL
X ; DON'T CARE

SN74125N
SN74LS125AN
TTL BUS BUFFER GATES WITH 3-STATE OUTPUT
—TOP VIEW—

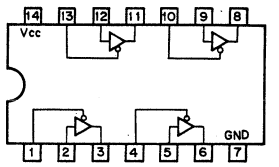

G	A	Y
0	0	0
0	1	1
1	X	HI-Z

0 ; LOW LEVEL X ; DON'T CARE
1 ; HIGH LEVEL HI-Z; HIGH IMPEDANCE

SN74S139N (TI)
SN74LS139N (TI)
TTL 2-TO-4-LINE DECODER/DEMULTIPLXER
—TOP VIEW—

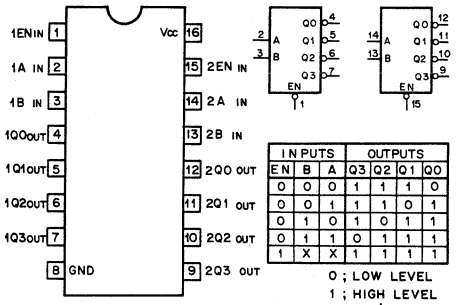

INPUTS			OUTPUTS			
EN	B	A	Q3	Q2	Q1	Q0
0	0	0	1	1	1	0
0	0	1	1	1	0	1
0	1	0	1	0	1	1
0	1	1	0	1	1	1
1	X	X	1	1	1	1

0 ; LOW LEVEL
1 ; HIGH LEVEL
X ; DON'T CARE

SN74LS126AN (TI)
TTL BUS BUFFER GATE WITH 3-STATE OUTPUT
—TOP VIEW—

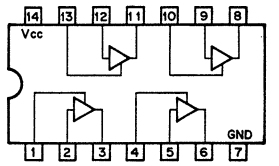

G	A	Y	
1	1	1	0; LOW LEVEL
1	0	0	1; HIGH LEVEL
0	X	HI-Z	X; DON'T CARE

HI-Z; HIGH IMPEDANCE

SN74148N (TI)
SN74LS148N (TI)
TTL 8-TO-3-LINE PRIORITY ENCODER
— TOP VIEW—

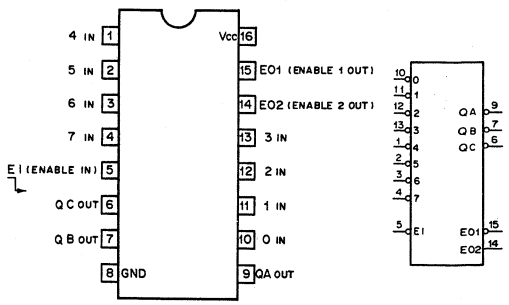

INPUTS									OUTPUTS				
EI	7	6	5	4	3	2	1	0	QC	QB	QA	EO1	EO2
1	X	X	X	X	X	X	X	X	1	1	1	1	1
0	1	1	1	1	1	1	1	1	1	1	1	0	1
0	1	1	1	1	1	1	1	0	1	1	1	1	0
0	1	1	1	1	1	1	0	X	1	1	0	1	0
0	1	1	1	1	1	0	X	X	1	0	1	1	0
0	1	1	1	1	0	X	X	X	1	0	0	1	0
0	1	1	1	0	X	X	X	X	0	1	1	1	0
0	1	1	0	X	X	X	X	X	0	1	0	1	0
0	1	0	X	X	X	X	X	X	0	0	1	1	0
0	0	X	X	X	X	X	X	X	0	0	0	1	0

0;LOW LEVEL 1;HIGH LEVEL X;DON'T CARE

SN74128N (TI)
TTL 50-OHM LINE DRIVER
—TOP VIEW—

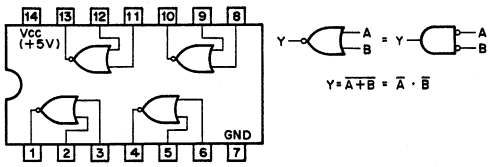

SN74151AN (TI)
SN74S151N (TI)
SN74LS151N (TI)
TTL 8-LINE-TO-1-LINE DATA SELECTOR/MULTIPLEXER
— TOP VIEW —

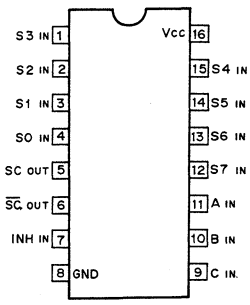

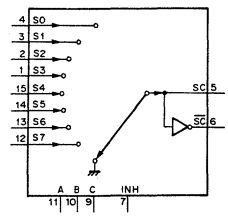

CONTROL INPUTS				ON CHANNEL
INH	C	B	A	
0	0	0	0	0
0	0	0	1	1
0	0	1	0	2
0	0	1	1	3
0	1	0	0	4
0	1	0	1	5
0	1	1	0	6
0	1	1	1	7
1	X	X	X	GND

0 ; LOW LEVEL
1 ; HIGH LEVEL
X ; DON'T CARE

SN74153N (TI)
SN74L153N (TI)
SN74LS153N (TI)
SN74S153N (TI)
HD74LS153P (HITACHI)
M74LS153P (MITSUBISHI)
MB74LS153 (FUJITSU)
TTL 4-LINE-TO-1-LINE DATA SELECTOR/MULTIPLEXER
— TOP VIEW —

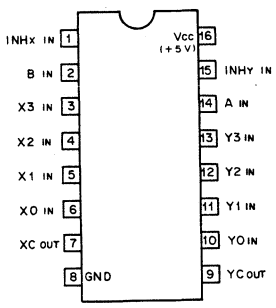

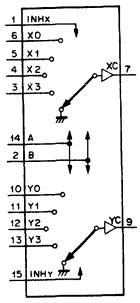

CONTROL IN			ON CHANNEL
INH	B	A	
0	0	0	0
0	0	1	1
0	1	0	2
0	1	1	3
1	X	X	GND

0 ; LOW LEVEL
1 ; HIGH LEVEL
X ; DON'T CARE

SN74157N (TI)
SN74L157N (TI)
SN74S157N (TI)
SN74LS157N (TI)
HD74LS157P (HITACHI)
MB74LS157 (FUJITSU)
M74LS157P (MITSUBISHI)
TTL 2-LINE-TO-1-LINE DATA SELECTOR/MULTIPLEXER
— TOP VIEW —

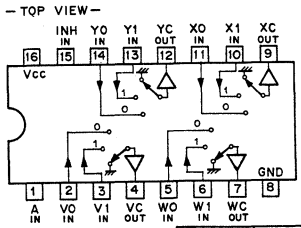

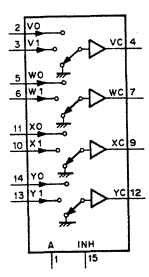

CONT. IN		ON CHANNEL
INH	A	
0	0	0
0	1	1
1	X	GND

0 ; LOW LEVEL
1 ; HIGH LEVEL
X ; DON'T CARE

SN74161N (TI)
SN74LS161AN (TI)
HD74LS161P (HITACHI)
TTL PRESETTABLE SYNCHRONOUS 4-BIT BINARY COUNTER
— TOP VIEW —

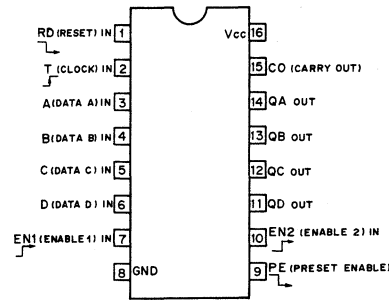

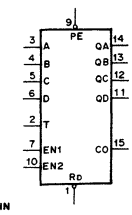

MODE SELECTION

CONTROL INPUTS				MODE
RD	PE	EN1	EN2	
0	X	X	X	RESET (ASYNCHRONOUS)
1	0	X	X	PRESET (SYNCHRONOUS)
1	1	0	X	NO COUNT
1	1	X	0	NO COUNT
1	1	1	1	COUNT

0 ; LOW LEVEL
1 ; HIGH LEVEL
X ; DON'T CARE

CARRY OUTPUT "CO"

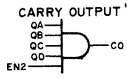

CO IS HIGH WHEN EN2 INPUT IS HIGH AND COUNT IS "15".

COUNT SEQUENCE

COUNT	OUTPUTS			
	QD	QC	QB	QA
0	0	0	0	0
1	0	0	0	1
2	0	0	1	0
3	0	0	1	1
4	0	1	0	0
5	0	1	0	1
6	0	1	1	0
7	0	1	1	1
8	1	0	0	0
9	1	0	0	1
10	1	0	1	0
11	1	0	1	1
12	1	1	0	0
13	1	1	0	1
14	1	1	1	0
15	1	1	1	1

SN74162N (TI)
SN74LS162AN (TI)
SN74S162N (TI)
TTL PRESETTABLE SYNCHRONOUS 4-BIT DECADE COUNTER
— TOP VIEW —

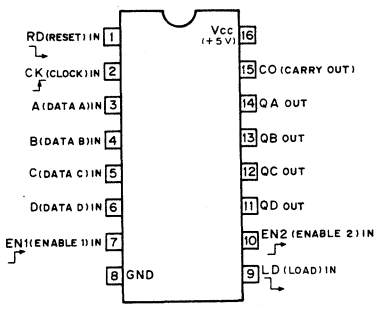

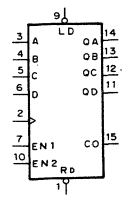

MODE SELECTION

CONTROL INPUTS				MODE
RD	LD	EN1	EN2	
0	X	X	X	RESET (ASYNCHRONOUS)
1	0	X	X	PRESET (SYNCHRONOUS)
1	1	0	X	NO COUNT
1	1	X	0	NO COUNT
1	1	1	1	COUNT

CARRY OUTPUT "CO"

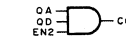

CO IS HIGH WHEN EN2 INPUT IS HIGH AND COUNT IS "9".

COUNT SEQUENCE

COUNT	OUTPUTS				
	QD	QC	QB	QA	CO
0	0	0	0	0	0
1	0	0	0	1	0
2	0	0	1	0	0
3	0	0	1	1	0
4	0	1	0	0	0
5	0	1	0	1	0
6	0	1	1	0	0
7	0	1	1	1	0
8	1	0	0	0	0
9	1	0	0	1	1

0 ; LOW LEVEL
1 ; HIGH LEVEL
X ; DON'T CARE

SN74163N (TI)
SN74S163N (TI)
SN74LS163AN (TI)
HD74LS163P (HITACHI)
TTL PRESETTABLE SYNCHRONOUS 4-BIT BINARY COUNTER
— TOP VIEW —

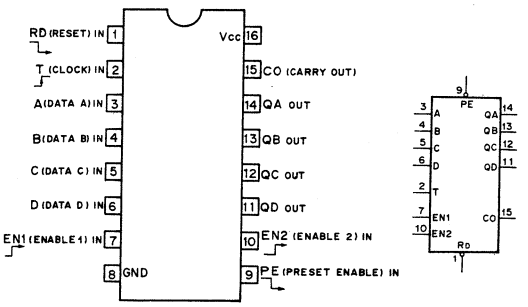

MODE SELECTION

CONTROL INPUTS				MODE
RD	PE	EN1	EN2	
0	X	X	X	RESET (SYNCHRONOUS)
1	0	X	X	PRESET (SYNCHRONOUS)
1	1	0	X	NO COUNT
1	1	X	0	NO COUNT
1	1	1	1	COUNT

0; LOW LEVEL
1; HIGH LEVEL
X; DON'T CARE

COUNT SEQUENCE

COUNT	OUTPUTS			
	QD	QC	QB	QA
0	0	0	0	0
1	0	0	0	1
2	0	0	1	0
3	0	0	1	1
4	0	1	0	0
5	0	1	0	1
6	0	1	1	0
7	0	1	1	1
8	1	0	0	0
9	1	0	0	1
10	1	0	1	0
11	1	0	1	1
12	1	1	0	0
13	1	1	0	1
14	1	1	1	0
15	1	1	1	1

CARRY OUTPUT "CO"

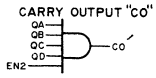

CO IS HIGH WHEN EN2 INPUT IS HIGH AND COUNT IS "15".

SN74S169N (TI)
TTL PRESETTABLE SYNCHRONOUS 4-BIT BINARY UP/DOWN COUNTER
— TOP VIEW —

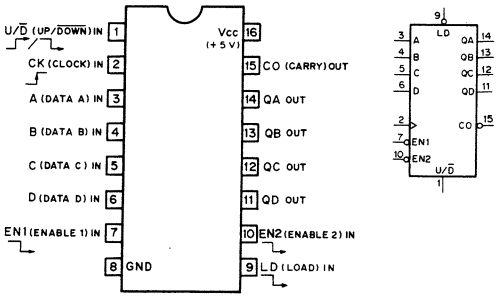

MODE SELECTION

INPUTS				MODE
LD	EN1	EN2	U/D	
0	X	X	X	PRESET
X	1	X	X	NO COUNT
X	X	1	X	NO COUNT
1	0	0	1	UP COUNT
1	0	0	0	DOWN COUNT

0; LOW LEVEL
1; HIGH LEVEL
X; DON'T CARE

COUNT SEQUENCE

COUNT	OUTPUTS			
	QD	QC	QB	QA
0	0	0	0	0
1	0	0	0	1
2	0	0	1	0
3	0	0	1	1
4	0	1	0	0
5	0	1	0	1
6	0	1	1	0
7	0	1	1	1
8	1	0	0	0
9	1	0	0	1
10	1	0	1	0
11	1	0	1	1
12	1	1	0	0
13	1	1	0	1
14	1	1	1	0
15	1	1	1	1

UP COUNT
DOWN COUNT

CARRY OUTPUTS "CO"
AT U/D = 1

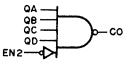

AT U/D = 0

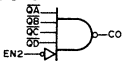

SN74164N (TI)
SN74L164N (TI)
SN74LS164N (TI)
HD74LS164P (HITACHI)
TTL 8-BIT PARALLEL-OUT SERIAL SHIFT REGISTER
—TOP VIEW—

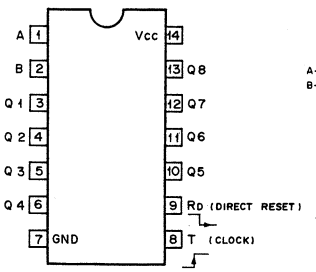

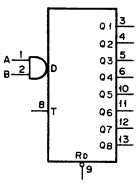

INPUTS				OUTPUTS			
RD	T	A	B	Q1	Q2	----	Q8
0	X	X	X	0	0	0	0
1	0	X	X	Q1o	Q2o	----	Q8o
1	↑	1	1	1	Q1n	----	Q7n
1	↑	0	X	0	Q1n	----	Q7n
1	↑	X	0	0	Q1n	----	Q7n

0; LOW LEVEL
1; HIGH LEVEL
X; DON'T CARE

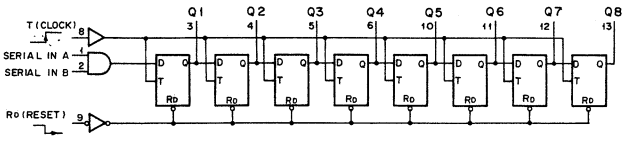

SN74174N (TI)
SN74S174N (TI)
SN74LS174N (TI)
HD74LS174P (HITACHI)
MB74LS174 (FUJITSU)
M74LS174P (MITSUBISHI)
TTL D-TYPE FLIP-FLOP WITH DIRECT RESET
— TOP VIEW —

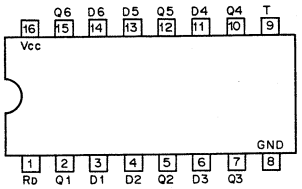

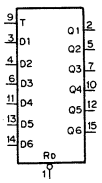

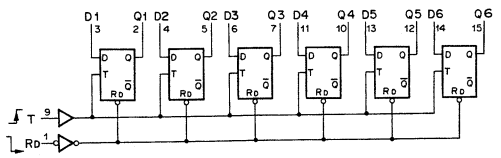

EACH FLIP-FLOP

INPUTS			OUT
RD	T	D	Q
0	X	X	0
1	↑	0	0
1	↑	1	1
1	0	X	Qo

0; LOW LEVEL
1; HIGH LEVEL
X; DON'T CARE

SN74175N (TI)
SN74S175N (TI)
SN74LS175N (TI)
HD74LS175P (HITACHI)
TTL D-TYPE FLIP-FLOP WITH CLEAR
—TOP VIEW—

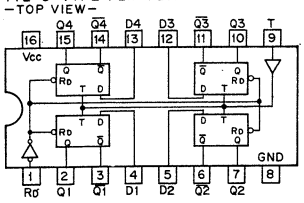

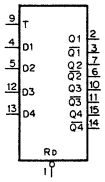

Rd	T	D	Q	$\overline{Q}$
0	X	X	0	1
1	↑	1	1	0
1	↑	0	0	1
1	0	X	Q_0	$\overline{Q}_0$

0 ; LOW LEVEL
1 ; HIGH LEVEL
X ; DON'T CARE

SN74S189AN (TI)
SN74S189N (TI)
TTL 64-BIT RAM WITH 3-STATE OUTPUT
— TOP VIEW —

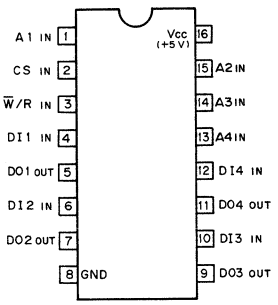

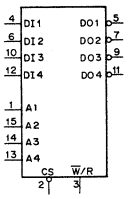

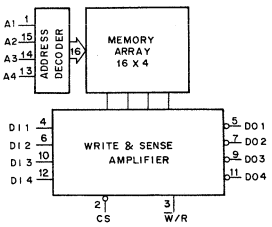

DI1 to DI4 ; DATA INPUTS

DO1 to DO4 ; DATA OUTPUTS

A1 to A3 ; ADDRESS INPUT

CS ; CHIP SELECT INPUT

$\overline{W}$/R ; WRITE/READ ENABLE IN

CS	$\overline{W}$/R	FUNCTION	OUTPUTS
0	0	WRITE	HIGH IMPEDANCE
0	1	READ	COMPLEMENT OF DATA ENTERED
1	X	INHIBIT	HIGH IMPEDANCE

0 ; LOW LEVEL
1 ; HIGH LEVEL
X ; DON'T CARE

SN74191N (TI)
SN74LS191N (TI)
TTL PRESETTABLE SYNCHRONOUS 4-BIT BINARY UP/DOWN COUNTER
— TOP VIEW —

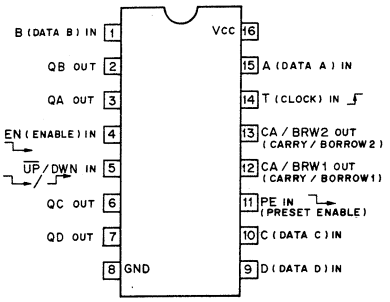

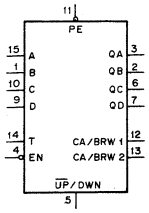

MODE SELECTION

CONTROL INPUTS			MODE
PE	EN	$\overline{UP}$/DWN	
0	X	X	PRESET (ASYNCHRONOUS)
1	1	X	NO COUNT
1	0	0	UP COUNT
1	0	1	DOWN COUNT

0 ; LOW LEVEL
1 ; HIGH LEVEL
X ; DON'T CARE.

COUNT SEQUENCE

COUNT	OUTPUTS			
	QD	QC	QB	QA
0	0	0	0	0
1	0	0	0	1
2	0	0	1	0
3	0	0	1	1
4	0	1	0	0
5	0	1	0	1
6	0	1	1	0
7	0	1	1	1
8	1	0	0	0
9	1	0	0	1
10	1	0	1	0
11	1	0	1	1
12	1	1	0	0
13	1	1	0	1
14	1	1	1	0
15	1	1	1	1

UP COUNT
DOWN COUNT

CA/BRW OUTPUTS

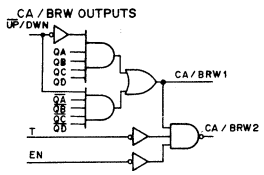

CA/BRW1 OUTPUT IS HIGH WHEN COUNT IS "15" AT UP-COUNT OR WHEN COUNT IS "0" AT DOWN COUNT.

CA/BRW2 OUTPUT IS LOW WHEN BOTH THE CLOCK AND EN INPUTS ARE LOW AND CA/BRW1 OUTPUT IS HIGH.

SN74LS195AN (TI)
SN74S195N (TI)
TTL 4-BIT PARALLEL-ACCESS SHIFT REGISTER
— TOP VIEW —

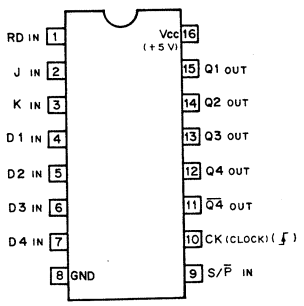

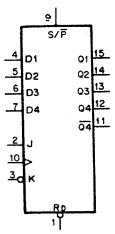

INPUTS									OUTPUTS				
RD	S/P	CK	J	K	D1	D2	D3	D4	Q1	Q2	Q3	Q4	$\overline{Q4}$
0	X	X	X	X	X	X	X	X	0	0	0	0	1
1	0	↑	X	X	d1	d2	d3	d4	d1	d2	d3	d4	$\overline{d4}$
1	1	0	X	X	X	X	X	X	Q_{1o}	Q_{2o}	Q_{3o}	Q_{4o}	$\overline{Q_{4o}}$
1	1	↑	0	1	X	X	X	X	Q_{1o}	Q_{1o}	Q_{2n}	Q_{3n}	$\overline{Q_{3n}}$
1	1	↑	0	0	X	X	X	X	0	Q_{1n}	Q_{2n}	Q_{3n}	$\overline{Q_{3n}}$
1	1	↑	1	1	X	X	X	X	1	Q_{1n}	Q_{2n}	Q_{3n}	$\overline{Q_{3n}}$
1	1	↑	1	0	X	X	X	X	$\overline{Q_{1o}}$	Q_{1n}	Q_{2n}	Q_{3n}	$\overline{Q_{3n}}$

0 ; LOW LEVEL
1 ; HIGH LEVEL
X ; DON'T CARE

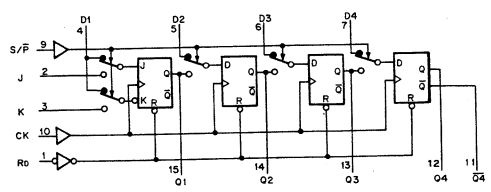

SN74LS197N (TI)

TTL PRESETTABLE DIVIDE-BY-2 AND DIVIDE-BY-8 (4-BIT BINARY) COUNTER

— TOP VIEW —

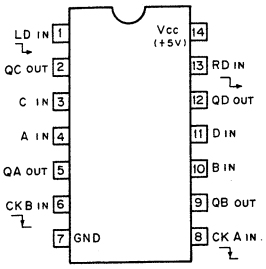

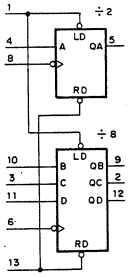

COUNT SEQUENCE.

÷2 SECTION

COUNT	RD	LD	QA
0	1	1	0
1	1	1	1
X	1	0	SET TO A
0	0	X	0

0 ; LOW LEVEL
1 ; HIGH LEVEL
X ; DON'T CARE

÷8 SECTION

COUNT	RD	LD	QD	QC	QB
0	1	1	0	0	0
1	1	1	0	0	1
2	1	1	0	1	0
3	1	1	0	1	1
4	1	1	1	0	0
5	1	1	1	0	1
6	1	1	1	1	0
7	1	1	1	1	1
X	1	0	D	C	B
0	0	X	0	0	0

SN74221N (TI)
SN74LS221N (TI)
HD74LS221P (HITACHI)

TTL MONOSTABLE MULTIVIBRATOR WITH SCHMITT TRIGGER INPUT

— TOP VIEW —

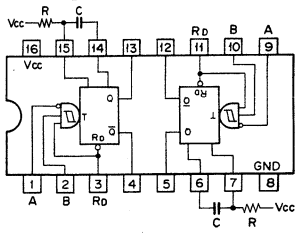

INPUTS			OUTPUTS	
RD	A	B	Q	$\overline{Q}$
0	X	X	0	1
X	1	X	0	1
X	X	0	0	1
1	0	↑	⊓	⊔
1	↓	1	⊓	⊔
↑	0	1	⊓	⊔

0 ; LOW LEVEL
1 ; HIGH LEVEL
X ; DON'T CARE

OUTPUT PULSE WIDTH = 0.7CR

SN74S240N (TI)
SN74LS240N (TI)
HD74LS240P (HITACHI)

TTL 3-STATE SCHMITT TRIGGER INVERTER/LINE DRIVER

— TOP VIEW —

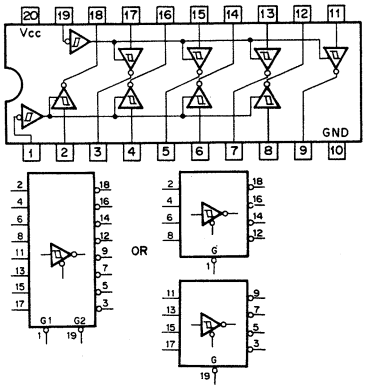

G	A	Y
0	0	1
0	1	0
1	X	HI-Z

0 ; LOW LEVEL
1 ; HIGH LEVEL
X ; DON'T CARE
HI-Z ; HIGH IMPEDANCE

SN74LS241N (TI)
SN74S241N (TI)
HD74LS241P (HITACHI)

TTL 3-STATE SCHMITT TRIGGER BUFFER/LINE DRIVER

— TOP VIEW —

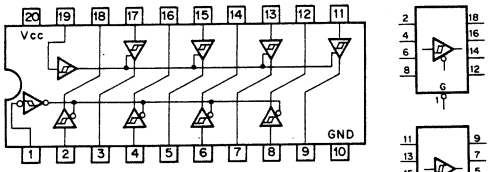

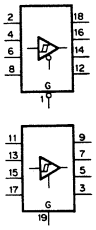

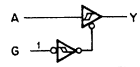

G	A	Y
0	0	0
0	1	1
1	0	HI-Z
1	1	HI-Z

HI-Z ;
HIGH IMPEDANCE

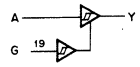

G	A	Y
0	0	HI-Z
0	1	HI-Z
1	0	0
1	1	1

HI-Z ;
HIGH IMPEDANCE

SN74LS243N (TI)

TTL BUS TRANSCEIVERS WITH 3-STATE OUTPUT

— TOP VIEW —

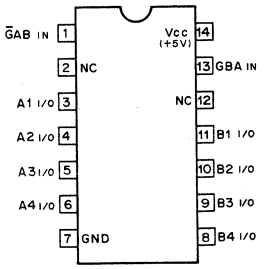

$\overline{G}$AB	GBA	OPERATION
0	0	A to B
0	1	DON'T USE
1	0	HI-Z
1	1	B to A

0 ; LOW LEVEL
1 ; HIGH LEVEL
HI-Z ; HIGH IMPEDANCE

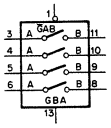

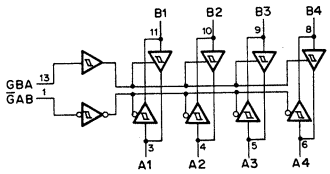

SN74LS244N (TI)
HD74LS244P (HITACHI)
M74LS244P (MITSUBISHI)

TTL 3-STATE SCHMITT TRIGGER BUFFER/DRIVER

— TOP VIEW —

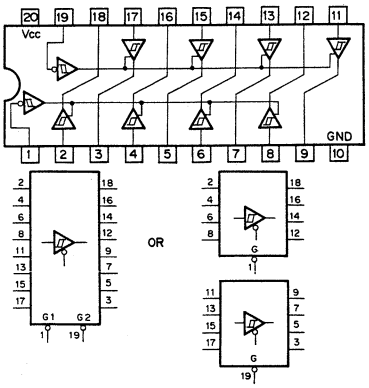

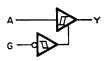

G	A	Y
0	0	0
0	1	1
1	X	HI-Z

0 ; LOW LEVEL
1 ; HIGH LEVEL
X ; DON'T CARE
HI-Z ; HIGH IMPEDANCE

SN74LS245N (TI)

TTL BILATERAL SCHMITT TRIGGER BUS TRANSCEIVERS WITH 3-STATE OUTPUT

— TOP VIEW —

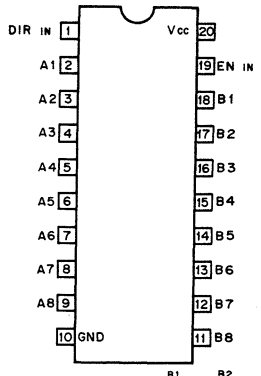

EN	DIR	OPERATION
0	0	B to A
0	1	A to B
1	X	HI-Z

0; LOW LEVEL
1; HIGH LEVEL
X; DON'T CARE.

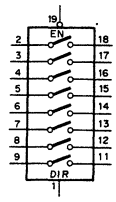

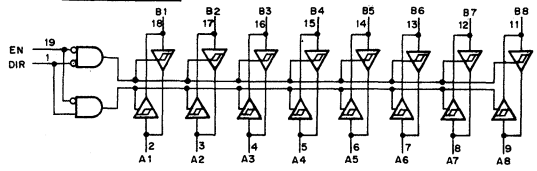

SN74273N (TI)
SN74LS273N (TI)
M74LS273P (MITSUBISHI)

TTL D-TYPE FLIP-FLOP WITH DIRECT RESET

— TOP VIEW —

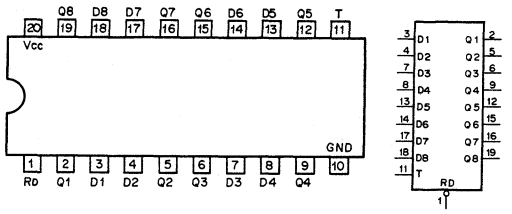

EACH FLIP-FLOP

INPUTS			OUT
Rd	T	D	Q
0	X	X	0
1	↓	0	0
1	↓	1	1
1	0	X	Q0

0; LOW LEVEL
1; HIGH LEVEL
X; DON'T CARE

SN74LS257AN (TI)

TTL 2-LINE-TO-1-LINE DATA SELECTOR/MULTIPLEXER

— TOP VIEW —

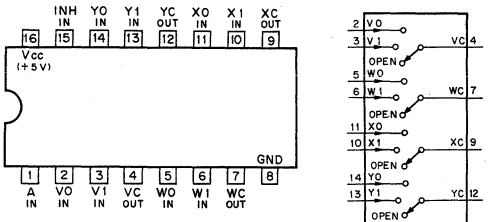

CONT. IN		ON CHANNEL
INH	A	
0	0	0
0	1	1
1	X	OPEN

0; LOW LEVEL
1; HIGH LEVEL
X; DON'T CARE

SN74LS280N (TI)

TTL 9-BIT ODD/EVEN PARITY GENERATOR/CHECKER

— TOP VIEW —

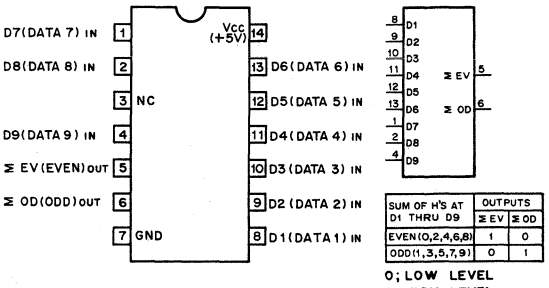

SUM OF H'S AT D1 THRU D9	OUTPUTS	
	Σ EV	Σ OD
EVEN(0,2,4,6,8)	1	0
ODD(1,3,5,7,9)	0	1

0; LOW LEVEL
1; HIGH LEVEL

SN74265N (TI)

TTL COMPLEMENTARY-OUTPUT ELEMENT

— TOP VIEW —

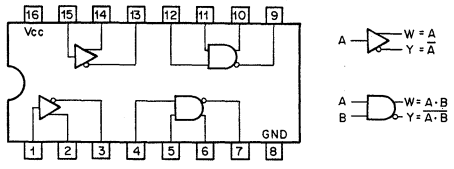

SN74LS365AN (TI)
SN74365AN (TI)

TTL 3-STATE BUS DRIVER

—TOP VIEW—

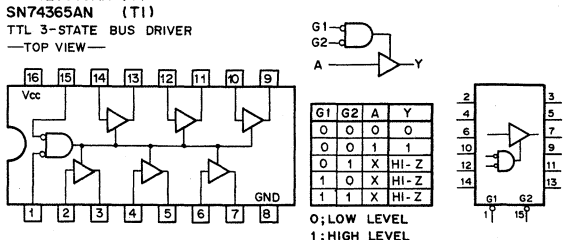

G1	G2	A	Y
0	0	0	0
0	0	1	1
0	1	X	HI-Z
1	0	X	HI-Z
1	1	X	HI-Z

0; LOW LEVEL
1; HIGH LEVEL
X; DON'T CARE
HI-Z; HIGH IMPEDANCE

SN74367AN (TI)
SN74LS367AN (TI)
TTL BUS DRIVER WITH 3-STATE OUTPUTS
— TOP VIEW —

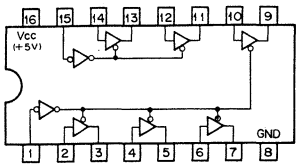

G	A	Y
0	0	0
0	1	1
1	X	HI-Z

0 ; LOW LEVEL
1 ; HIGH LEVEL
X ; DON'T CARE
HI-Z ; HIGH IMPEDANCE

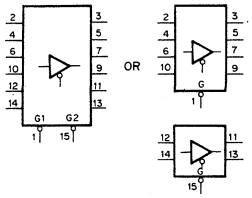

SN74368AN (TI)
SN74LS368AN (TI)
TTL BUS INVERTER WITH 3-STATE OUTPUTS
— TOP VIEW —

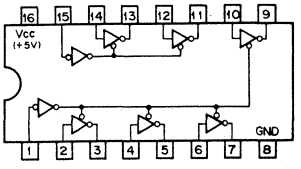

G	A	Y
0	0	1
0	1	0
1	X	HI-Z

0 ; LOW LEVEL
1 ; HIGH LEVEL
X ; DON'T CARE
HI-Z ; HIGH IMPEDANCE

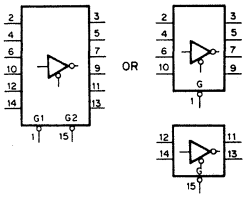

SN74LS373N (TI)
SN74S373N (TI)
TTL 3-STATE OUTPUTS OCTAL LATCHES
— TOP VIEW —

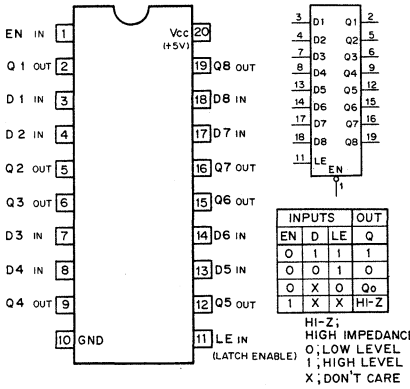

INPUTS			OUT
EN	D	LE	Q
0	1	1	1
0	0	1	0
0	X	0	Qo
1	X	X	HI-Z

HI-Z ; HIGH IMPEDANCE
0 ; LOW LEVEL
1 ; HIGH LEVEL
X ; DON'T CARE

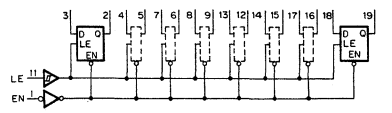

SN74LS374N (TI)
SN74S374N (TI)
TTL 3-STATE OUTPUTS OCTAL D-TYPE FLIP-FLOP
– TOP VIEW –

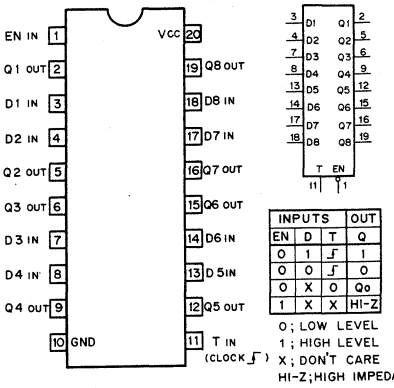

INPUTS			OUT
EN	D	T	Q
0	1	↓	1
0	0	↓	0
0	X	0	Qo
1	X	X	HI-Z

0 ; LOW LEVEL
1 ; HIGH LEVEL
X ; DON'T CARE
HI-Z ; HIGH IMPEDANCE

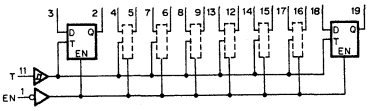

SN74LS375N (TI)
TTL BISTABLE LATCH
— TOP VIEW —

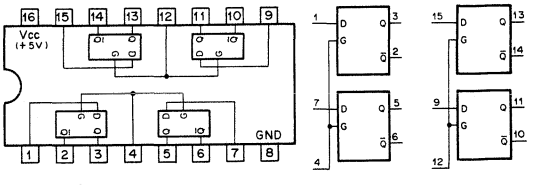

D	G	Q	$\bar{Q}$
0	1	0	1
1	1	1	0
X	0	Qo	$\bar{Q}o$

0 ; LOW LEVEL
1 ; HIGH LEVEL
X ; DON'T CARE

SN74390N (TI)
SN74LS390N (TI)
TTL DIVIDE-BY-2 AND DIVIDE-BY-5 COUNTER
— TOP VIEW —

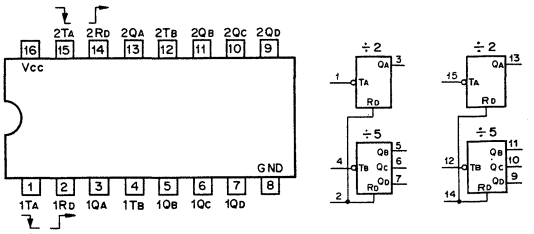

COUNT SEQUENCE
÷2 SECTION

COUNT	QA
0	0
1	1

÷5 SECTION

COUNT	QD	QC	QB
0	0	0	0
1	0	0	1
2	0	1	0
3	0	1	1
4	1	0	0

RESET/COUNT FUNCTION

RD	QD	QC	QB	QA
1	0	0	0	0
0	COUNT			

0 ; LOW LEVEL
1 ; HIGH LEVEL

SN74393N (TI)
SN74LS393N (TI)
TTL 4-BIT BINARY COUNTER
—TOP VIEW—

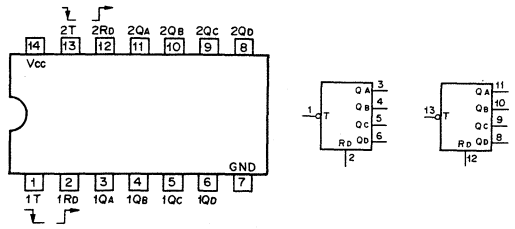

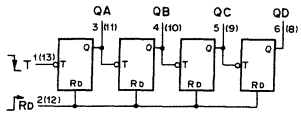

COUNT SEQUENCE				
COUNT	QD	QC	QB	QA
0	0	0	0	0
1	0	0	0	1
2	0	0	1	0
3	0	0	1	1
4	0	1	0	0
5	0	1	0	1
6	0	1	1	0
7	0	1	1	1
8	1	0	0	0
9	1	0	0	1
10	1	0	1	0
11	1	0	1	1
12	1	1	0	0
13	1	1	0	1
14	1	1	1	0
15	1	1	1	1

RESET/COUNT FUNCTION

RD	QD	QC	QB	QA
1	0	0	0	0
0	COUNT			

0; LOW LEVEL
1; HIGH LEVEL

SN74LS624N (TI)
TTL VOLTAGE CONTROLLED OSCILLATOR
—TOP VIEW—

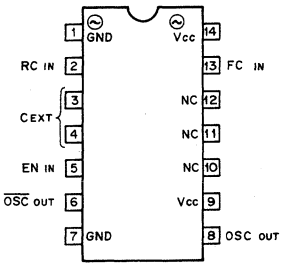

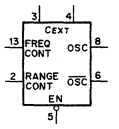

EN	OSC	$\overline{OSC}$
0	ENABLE	ENABLE
1	LOW	HIGH

0; LOW LEVEL
1; HIGH LEVEL

SN74LS669N (TI)
TTL PRESETTABLE SYNCHRONOUS 4-BIT BINARY UP/DOWN COUNTER
—TOP VIEW—

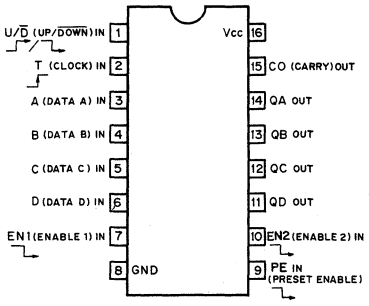

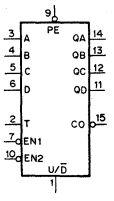

MODE SELECTION

INPUTS				MODE
PE	EN1	EN2	U/$\overline{D}$	
0	X	X	X	PRESET
X	1	X	X	NO COUNT
X	X	1	X	NO COUNT
1	0	0	1	UP COUNT
1	0	0	0	DOWN COUNT

0; LOW LEVEL
1; HIGH LEVEL
X; DON'T CARE

CARRY OUTPUTS "CO"
AT U/$\overline{D}$ = 1

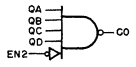

AT U/$\overline{D}$ = 0

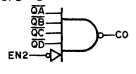

COUNT SEQUENCE

COUNT	OUTPUTS			
	QD	QC	QB	QA
0	0	0	0	0
1	0	0	0	1
2	0	0	1	0
3	0	0	1	1
4	0	1	0	0
5	0	1	0	1
6	0	1	1	0
7	0	1	1	1
8	1	0	0	0
9	1	0	0	1
10	1	0	1	0
11	1	0	1	1
12	1	1	0	0
13	1	1	0	1
14	1	1	1	0
15	1	1	1	1

UP COUNT
DOWN COUNT

SN74LS670N(TI)
TTL 4-BY-4 REGISTOR FILES WITH 3-STATE OUTPUT
—TOP VIEW—

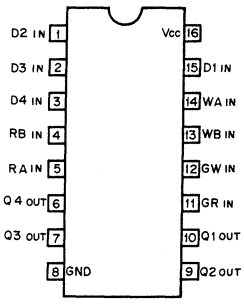

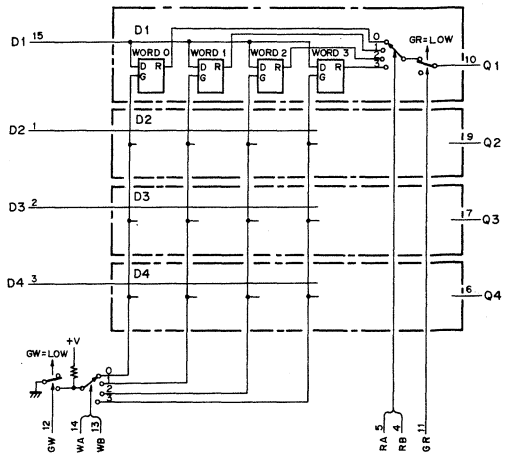

SN75107AN (TI)
SN75107BN (TI)
HD75107A (HITACHI)
HD75107AP (HITACHI)
LINE RECEIVER
—TOP VIEW—

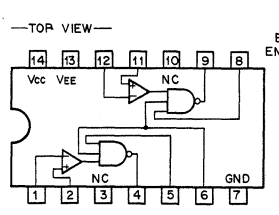

DIFF. INPUTS	EN	ENC	Y
B-A ≦ -25mV	X	X	1
	X	0	1
|B-A| < 25mV	0	X	1
	1	1	N·D
	X	0	1
B-A ≧ 25mV	0	X	1
	1	1	0

0; LOW LEVEL
1; HIGH LEVEL
X; DON'T CARE
ND; NOT DEFINED

SN75207BN (TI)
BIPOLAR LINE RECEIVER (TTL COMPATIBLE)
—TOP VIEW—

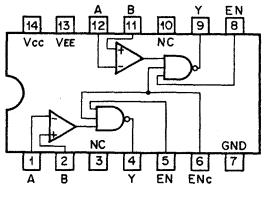

INPUTS			OUT
B-A	EN	ENc	Y
B-A ≧ 10mV	X	0	1
	0	X	1
	1	1	0
|B-A| < 10mV	X	0	1
	0	X	1
	1	1	?
B-A ≦ -10mV	X	X	1

0; LOW LEVEL
1; HIGH LEVEL
X; DON'T CARE

SN75452BP (TI)
HD75452P (HITACHI)
TTL PERIPHERAL POSITIVE-NAND DRIVER
WITH OPEN-COLLECTOR
— TOP VIEW —

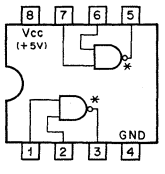

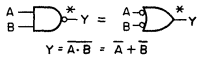

A	B	Y
0	0	1
0	1	1
1	0	1
1	1	0

0; LOW LEVEL
1; HIGH LEVEL

TC4001BP (TOSHIBA)
TC4001UBP (TOSHIBA)
μPD4001BC (NEC)
MB84001B (FUJITSU)
MSM4001 (OKI)
HD14001BP (HITACHI)
MC14001BCP (MOTOROLA)
MC14001UBCP (MOTOROLA)
C-MOS 2-INPUT NOR GATE
— TOP VIEW —

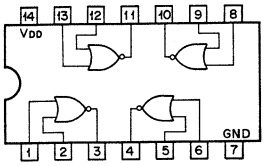

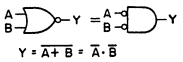

A	B	Y
0	0	1
0	1	0
1	0	0
1	1	0

0; LOW LEVEL
1; HIGH LEVEL

TC4008BP (TOSHIBA)
MC14008BCP (MOTOROLA)
C-MOS 4-BIT FULL ADDER
— TOP VIEW —

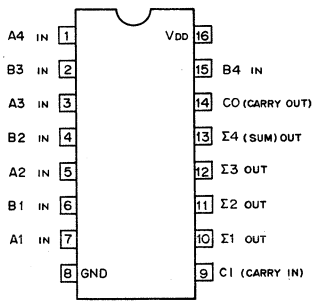

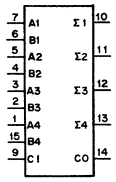

ONE STAGE

INPUTS			OUTPUTS	
CI	B	A	CO	Σ
0	0	0	0	0
0	0	1	0	1
0	1	0	0	1
0	1	1	1	0
1	0	0	0	1
1	0	1	1	0
1	1	0	1	0
1	1	1	1	1

0; LOW LEVEL
1; HIGH LEVEL

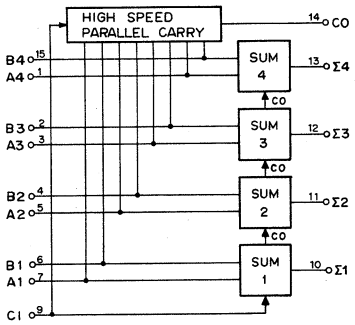

TC4011BP (TOSHIBA)
TC4011UBP (TOSHIBA)
μPD4011BC (NEC)
MSM4011RS (OKI)
MB84011B (FUJITSU)
HD14011BP (HITACHI)
MC14011BCP (MOTOROLA)
MC14011UBCP (MOTOROLA)
C-MOS 2-INPUT NAND GATE
— TOP VIEW —

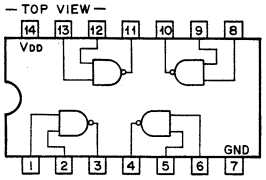

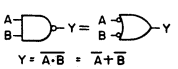

A	B	Y
0	0	1
0	1	1
1	0	1
1	1	0

0; LOW LEVEL
1; HIGH LEVEL

TC4013BP (TOSHIBA)
C-MOS D-TYPE FLIP FLOP WITH DIRECT SET / RESET
— TOP VIEW —

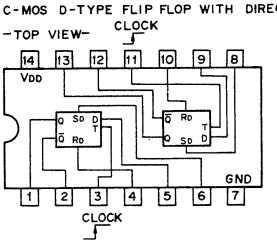

DIRECT R-S FLIP FLOP

Sd	Rd	Q	Q̄
0	0	On	Ōn
0	1	0	1
1	0	1	0
1	1	0	1

D-TYPE FLIP FLOP

tn	tn+1
D	Q
0	0
1	1

CLOCK T: tn; BEFORE CLOCK, tn+1; AFTER CLOCK

0; LOW LEVEL
1; HIGH LEVEL

MB84013B (FUJITSU)
MB84013M (FUJITSU)
μPD4013BC (NEC)
μPD4013C (NEC)
HD14013BP (HITACHI)
MC14013BCP (MOTOROLA)
C-MOS D-TYPE FLIP FLOP WITH DIRECT SET / RESET
— TOP VIEW —

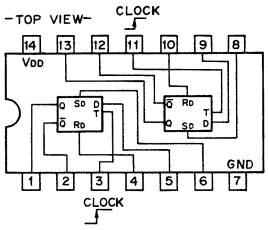

DIRECT R-S FLIP FLOP

Sd	Rd	Q	Q̄
0	0	On	Ōn
0	1	0	1
1	0	1	0
1	1	1	1

D-TYPE FLIP FLOP

tn	tn+1
D	Q
0	0
1	1

CLOCK T: tn; BEFORE CLOCK, tn+1; AFTER CLOCK

0; LOW LEVEL
1; HIGH LEVEL

TC4015BP (TOSHIBA)
μPD4015C (NEC)
μPD4015BC (NEC)
MC14015BCP (MOTOROLA)
C-MOS DUAL 4-STAGE STATIC SHIFT REGISTER WITH DIRECT RESET
— TOP VIEW —

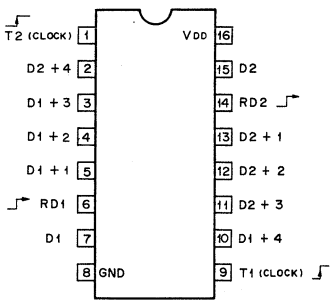

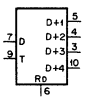

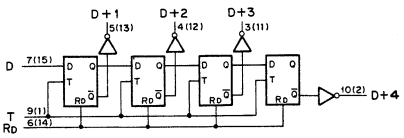

TC4028BP (TOSHIBA)
μPD4028C (NEC)
C-MOS BCD TO DECIMAL DECODER
— TOP VIEW —

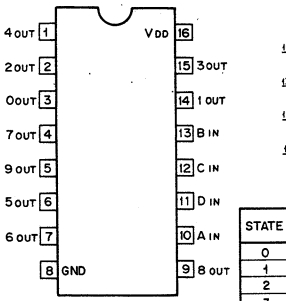

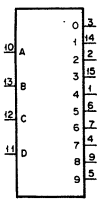

STATE	INPUTS				OUTPUTS									
	D	C	B	A	0	1	2	3	4	5	6	7	8	9
0	0	0	0	0	1	0	0	0	0	0	0	0	0	0
1	0	0	0	1	0	1	0	0	0	0	0	0	0	0
2	0	0	1	0	0	0	1	0	0	0	0	0	0	0
3	0	0	1	1	0	0	0	1	0	0	0	0	0	0
4	0	1	0	0	0	0	0	0	1	0	0	0	0	0
5	0	1	0	1	0	0	0	0	0	1	0	0	0	0
6	0	1	1	0	0	0	0	0	0	0	1	0	0	0
7	0	1	1	1	0	0	0	0	0	0	0	1	0	0
8	1	X	X	0	0	0	0	0	0	0	0	0	1	0
9	1	X	X	1	0	0	0	0	0	0	0	0	0	1

0; LOW LEVEL
1; HIGH LEVEL
X; DON'T CARE

TC4030BP (TOSHIBA)
μPD4030BC (NEC)
μPD4030C (NEC)
MC14507CP (MOTOROLA)
C-MOS EXCLUSIVE OR GATE
— TOP VIEW —

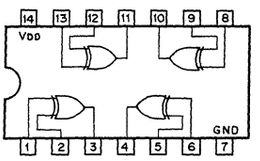

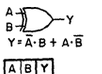

A	B	Y
0	0	0
0	1	1
1	0	1
1	1	0

0: LOW LEVEL
1: HIGH LEVEL

TC4040BP (TOSHIBA)
HD14040BP (HITACHI)
MB84040B (FUJITSU)
μPD4040C (NEC)
C-MOS 12-STAGE RIPPLE CARRY BINARY COUNTER/DRIVER
— TOP VIEW —

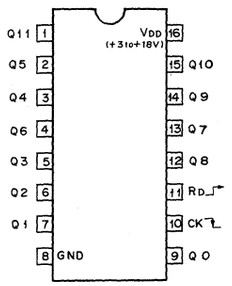

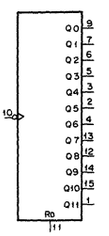

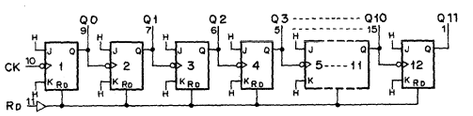

COUNT	Q11	Q10	Q9	Q8	Q7	Q6	Q5	Q4	Q3	Q2	Q1	Q0
0	0	0	0	0	0	0	0	0	0	0	0	0
1	0	0	0	0	0	0	0	0	0	0	0	1
2	0	0	0	0	0	0	0	0	0	0	1	0
3	0	0	0	0	0	0	0	0	0	0	1	1
⋮	⋮	⋮	⋮	⋮	⋮	⋮	⋮	⋮	⋮	⋮	⋮	⋮
4095	1	1	1	1	1	1	1	1	1	1	1	1

RD	Q11 ····· Q0
1	ALL LOW
0	COUNT

0; LOW LEVEL
1; HIGH LEVEL

TC4043BP (TOSHIBA)
MC14043BCP (MOTOROLA)
C-MOS 3-STATE OUTPUT NOR R-S LATCH
— TOP VIEW —

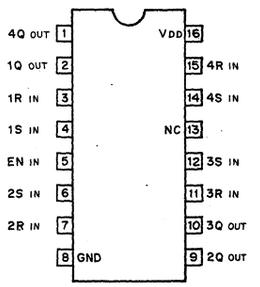

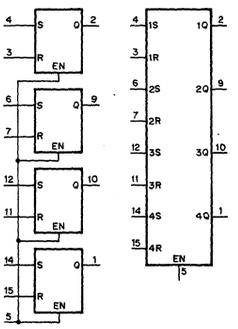

EN	S	R	Q
0	X	X	HIGH IMPEDANCE
1	0	0	NO CHANGE
1	0	1	0
1	1	0	1
1	1	1	1

0; LOW LEVEL
1; HIGH LEVEL
X; DON'T CARE

TC4046BP (TOSHIBA)
HD14046BP (HITACHI)
MC14046BCP (MOTOROLA)
C-MOS PHASE LOCKED LOOP
— TOP VIEW —

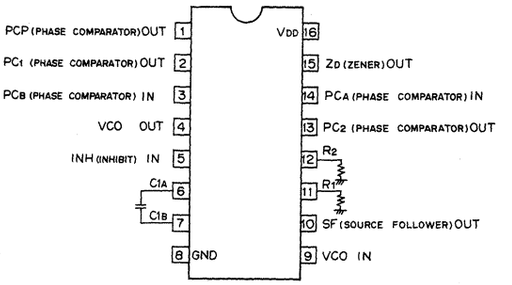

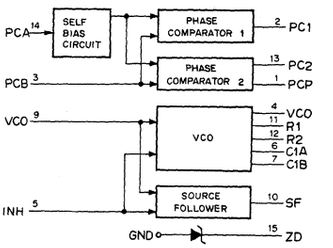

TC4049BP (TOSHIBA)
μPD4049C (NEC)
MB84049B (FUJITSU)
MB84049UB (FUJITSU)
MC14049UBCP (MOTOROLA)
C-MOS INVERTING TYPE BUFFER/CONVERTER
— TOP VIEW —

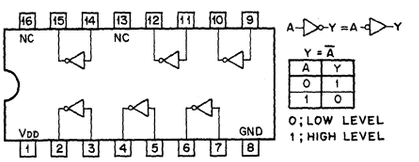

A	Y
0	1
1	0

0; LOW LEVEL
1; HIGH LEVEL

TC4051BP (TOSHIBA)
μPD4051BC (NEC)
HD14051BP (HITACHI)
MC14051BCP (MOTOROLA)
C-MOS 8-CHANNEL MULTIPLEXER/DEMULTIPLEXER
— TOP VIEW —

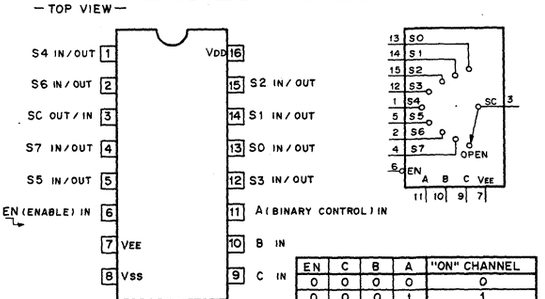

EN	C	B	A	"ON" CHANNEL
0	0	0	0	0
0	0	0	1	1
0	0	1	0	2
0	0	1	1	3
0	1	0	0	4
0	1	0	1	5
0	1	1	0	6
0	1	1	1	7
1	X	X	X	OPEN

0; LOW LEVEL
1; HIGH LEVEL
X; DON'T CARE

TC4052BP (TOSHIBA)
MB84052B (FUJITSU)
HD14052BP (HITACHI)
MC14052BCP (MOTOROLA)
C-MOS 4-CHANNEL MULTIPLEXER / DEMULTIPLEXER
— TOP VIEW —

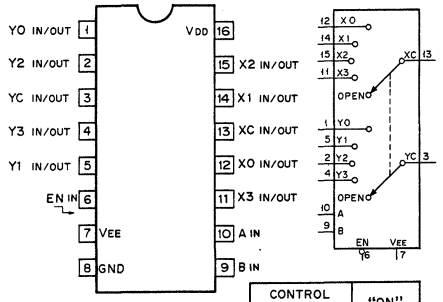

CONTROL INPUTS			"ON" CHANNEL
EN	B	A	
0	0	0	0
0	0	1	1
0	1	0	2
0	1	1	3
1	X	X	OPEN

0; LOW LEVEL
1; HIGH LEVEL
X; DON'T CARE.

TC4053BP (TOSHIBA)
MSM4053 (OKI)
MB84053B (FUJITSU)
HD14053BP (HITACHI)
μPD4053BC (NEC)
MC14053BCP (MOTOROLA)
C-MOS 2-CHANNEL MULTIPLEXER / DEMULTIPLEXER
— TOP VIEW —

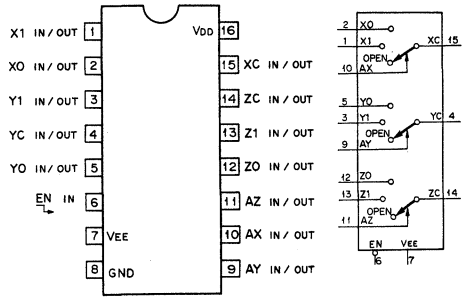

CONT. INPUTS		ON CHANNEL
EN	A (X,Y,Z)	
0	0	0
0	1	1
1	X	OPEN

0; LOW LEVEL
1; HIGH LEVEL
X; DON'T CARE.

TC4069UBP (TOSHIBA)
μPD4069C (NEC)
μPD4069UBC (NEC)
MB84069B (FUJITSU)
MB84069UB (FUJITSU)
HD14069BP (HITACHI)
HD14069UBP (HITACHI)
MC14069UBCP (MOTOROLA)
C-MOS INVERTER
— TOP VIEW —

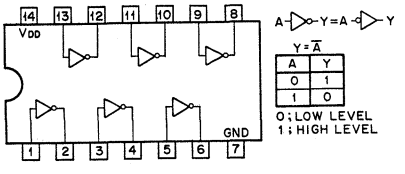

A	Y
0	1
1	0

0; LOW LEVEL
1; HIGH LEVEL

TC4071BP (TOSHIBA)
μPD4071BC (NEC)
MC14071BCP (MOTOROLA)
C-MOS 2-INPUT OR GATE
— TOP VIEW —

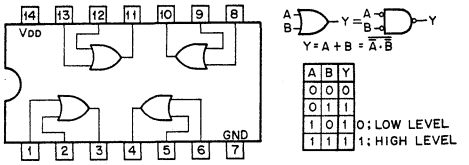

A	B	Y
0	0	0
0	1	1
1	0	1
1	1	1

0; LOW LEVEL
1; HIGH LEVEL

TC4073BP (TOSHIBA)
μPD4073BC (NEC)
MC14073BCP (MOTOROLA)
C-MOS 3-INPUT POSITIVE AND GATE
— TOP VIEW —

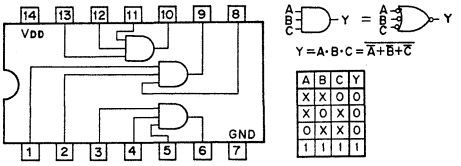

A	B	C	Y
X	X	0	0
X	0	X	0
0	X	X	0
1	1	1	1

TC4081BP (TOSHIBA)
MB84081B (FUJITSU)
MC14081BCP (MOTOROLA)
μPD4081BC (NEC)
C-MOS 2-INPUT AND GATE
— TOP VIEW —

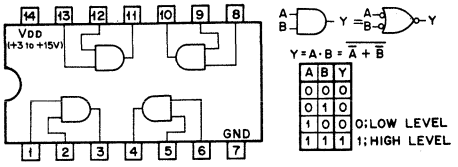

A	B	Y
0	0	0
0	1	0
1	0	0
1	1	1

0; LOW LEVEL
1; HIGH LEVEL

MC14495P (MOTOROLA)
C-MOS BCD-TO-SEVEN-SEGMENT 4-BIT LATCH/DECODER DRIVER
— TOP VIEW —

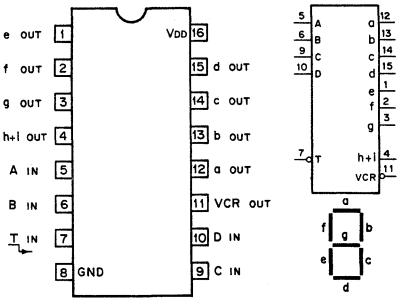

INPUTS					OUTPUTS									DISPLAY
T	D	C	B	A	a	b	c	d	e	f	g	h+l	VCR	
0	0	0	0	0	1	1	1	1	1	1	0	0	Z	0
0	0	0	0	1	0	1	1	0	0	0	0	0	Z	1
0	0	0	1	0	1	1	0	1	1	0	1	0	Z	2
0	0	0	1	1	1	1	1	1	0	0	1	0	Z	3
0	0	1	0	0	0	1	1	0	0	1	1	0	Z	4
0	0	1	0	1	1	0	1	1	0	1	1	0	Z	5
0	0	1	1	0	1	0	1	1	1	1	1	0	Z	6
0	0	1	1	1	1	1	1	0	0	0	0	0	Z	7
0	1	0	0	0	1	1	1	1	1	1	1	0	Z	8
0	1	0	0	1	1	1	1	1	0	1	1	0	Z	9
0	1	0	1	0	1	1	1	0	1	1	1	1	Z	A
0	1	0	1	1	0	0	1	1	1	1	1	1	Z	b
0	1	1	0	0	1	0	0	1	1	1	0	1	Z	C
0	1	1	0	1	0	1	1	1	1	0	1	1	Z	d
0	1	1	1	0	1	0	0	1	1	1	1	1	Z	E
0	1	1	1	1	1	0	0	0	1	1	1	1	0	F
↓	X	X	X	X	X	X	X	X	X	X	X	X	Z/0	DATA LATCH
1	X	X	X	X	X	X	X	X	X	X	X	X	Z/0	DATA HOLD

0; LOW LEVEL
1; HIGH LEVEL
X; DON'T CARE
Z; HIGH IMPEDANCE

HD14503BP (HITACHI)
MC14503BCP (MOTOROLA)
C-MOS NON-INVERTING 3-STATE BUFFER
— TOP VIEW —

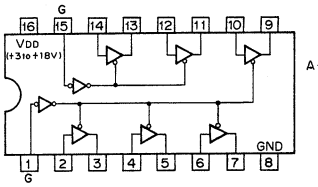

A	G	Y
0	0	0
1	0	1
X	1	HI-Z

0; LOW LEVEL
1; HIGH LEVEL
X; DON'T CARE
HI-Z; HIGH IMPEDANCE

TC4512BP (TOSHIBA)
MC14512BCP (MOTOROLA)
C-MOS 8-CHANNEL DATA SELECTOR/MULTIPLEXER
-TOP VIEW-

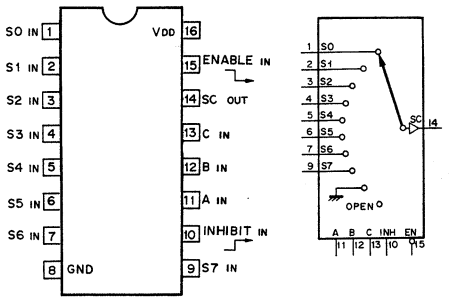

CONTROL INPUTS					OUTPUT
EN	INH	C	B	A	SC
0	0	0	0	0	S0
0	0	0	0	1	S1
0	0	0	1	0	S2
0	0	0	1	1	S3
0	0	1	0	0	S4
0	0	1	0	1	S5
0	0	1	1	0	S6
0	0	1	1	1	S7
0	1	X	X	X	GND
1	X	X	X	X	OPEN

0; LOW LEVEL
1; HIGH LEVEL
X; DON'T CARE

TC4520BP (TOSHIBA)
MB84520B (FUJITSU)
MC14520BCP (MOTOROLA)
C-MOS DUAL 4-BIT BINARY UP COUNTER
— TOP VIEW —

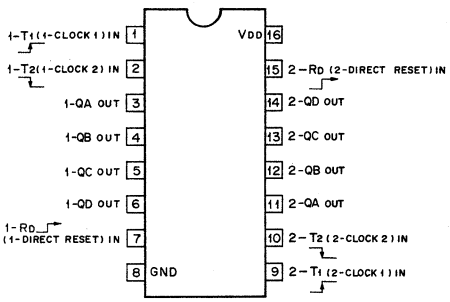

STATE	OUTPUTS			
	QD	QC	QB	QA
0	0	0	0	0
1	0	0	0	1
2	0	0	1	0
3	0	0	1	1
4	0	1	0	0
5	0	1	0	1
6	0	1	1	0
7	0	1	1	1
8	1	0	0	0
9	1	0	0	1
10	1	0	1	0
11	1	0	1	1
12	1	1	0	0
13	1	1	0	1
14	1	1	1	0
15	1	1	1	1

0; LOW LEVEL
1; HIGH LEVEL
X; DON'T CARE

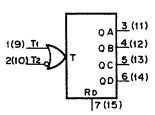

T1	T2	RD	ACTION
↓	1	0	INCREMENT COUNTER
0	↓	0	INCREMENT COUNTER
↓	X	0	NO CHANGE
X	↓	0	NO CHANGE
↓	0	0	NO CHANGE
1	↓	0	NO CHANGE
X	X	1	QA THRU QD = 0

MC14526BCP (MOTOROLA)
C-MOS PROGRAMMABLE DIVIDE-BY-N 4-BIT BINARY DOWN COUNTER
—TOP VIEW—

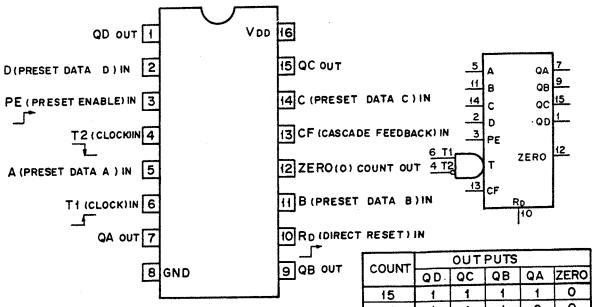

T1	T2	PE	RD	ACTION
0	0	0	0	NO COUNT
↓	0	0	0	COUNT ↑
X	↑	0	0	NO COUNT
↑	↓	0	0	COUNT ↓
X	X	1	0	PRESET
X	X	X	1	RESET

0; LOW LEVEL
1; HIGH LEVEL
X; DON'T CARE

COUNT	OUTPUTS				
	QD	QC	QB	QA	ZERO
15	1	1	1	1	0
14	1	1	1	0	0
13	1	1	0	1	0
12	1	1	0	0	0
11	1	0	1	1	0
10	1	0	1	0	0
9	1	0	0	1	0
8	1	0	0	0	0
7	0	1	1	1	0
6	0	1	1	0	0
5	0	1	0	1	0
4	0	1	0	0	0
3	0	0	1	1	0
2	0	0	1	0	0
1	0	0	0	1	0
0	0	0	0	0	1

TC4528BP (TOSHIBA)
μPD4528C (NEC)
MC14528BCP (MOTOROLA)
C-MOS RETRIGGERABLE / RESETTABLE MMV
—TOP VIEW—

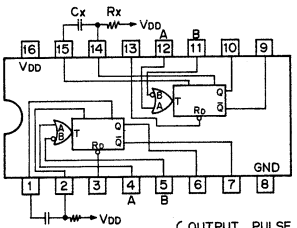

INPUTS			OUTPUTS	
A	B	RD	Q	Q̄
↓	1	1	⎍	⎍
↓	0	1	Q	Q̄
1	↑	1	Q	Q̄
0	↑	1	⎍	⎍
X	X	0	0	1

0; LOW LEVEL
1; HIGH LEVEL
X; DON'T CARE

OUTPUT PULSE WIDTH Q OR Q̄
• (FOR Cx ≧ 0.01μF USE FORMULA)
PW = 0.2 • Rx • Cx • ℓn (VDD - GND)
• (FOR Cx < 0.01μF USE DATA BOOK.)

HD14538BP (HITACHI)
MC14538BCP (MOTOROLA)
C-MOS DUAL RETRIGGERABLE/NON-RETRIGGERABLE MONOSTABLE MULTIVIBRATOR
-TOP VIEW-

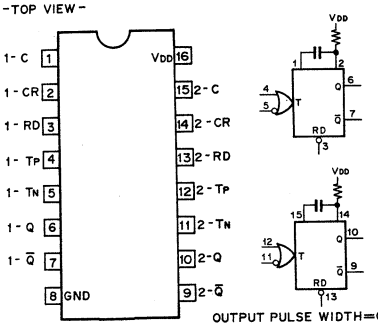

OUTPUT PULSE WIDTH=CR

RETRIGGERABLE M.M.V

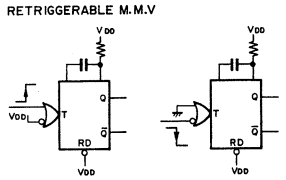

NON-RETRIGGERABLE M.M.V

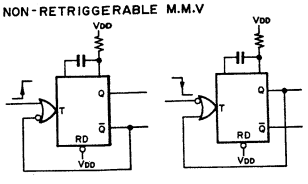

TC4555BP (TOSHIBA)
MC14555BCP (MOTOROLA)
C-MOS BINARY TO 1-OF-4 DECODER / DEMULTIPLEXER
—TOP VIEW—

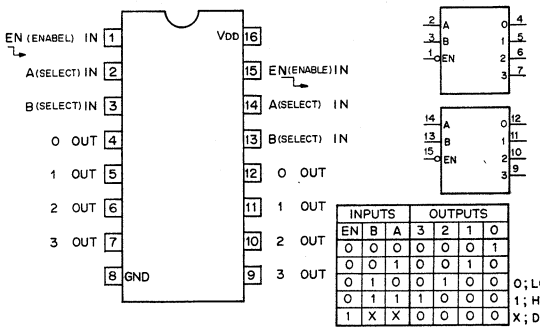

INPUTS			OUTPUTS			
EN	B	A	3	2	1	0
0	0	0	0	0	0	1
0	0	1	0	0	1	0
0	1	0	0	1	0	0
0	1	1	1	0	0	0
1	X	X	0	0	0	0

0; LOW LEVEL
1; HIGH LEVEL
X; DON'T CARE

MC14557BCP (MOTOROLA)
C-MOS 1-TO-64-BIT VARIABLE LENGTH SHIFT REGISTER
—TOP VIEW—

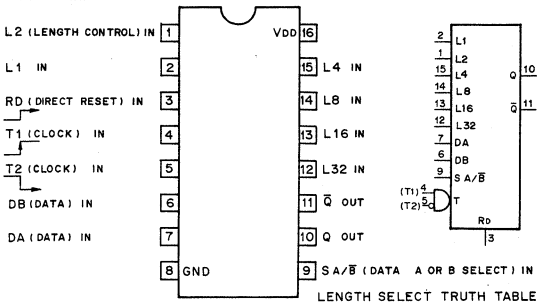

INPUTS				OUTPUT
RD	SA/B̄	T1	T2	Q
0	0	↓	0	DB
0	1	↓	0	DA
0	0	1	↑	DB
0	1	1	↑	DA
1	X	X	X	0

0; LOW LEVEL
1; HIGH LEVEL
X; DON'T CARE

LENGTH SELECT TRUTH TABLE

L32	L16	L8	L4	L2	L1	REGISTER LENGTH
0	0	0	0	0	0	1-BIT
0	0	0	0	0	1	2-BIT
0	0	0	0	1	0	3-BIT
0	0	0	0	1	1	4-BIT
0	0	0	1	0	0	5-BIT
⋮	⋮	⋮	⋮	⋮	⋮	⋮
1	1	1	1	0	0	61-BIT
1	1	1	1	0	1	62-BIT
1	1	1	1	1	0	63-BIT
1	1	1	1	1	1	64-BIT

μPD4584BC (NEC)
MC14584BCP (MOTOROLA)
C-MOS SCHMITT TRIGGER INVERTER
—TOP VIEW—

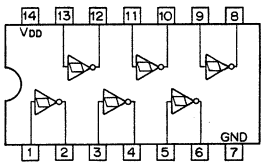

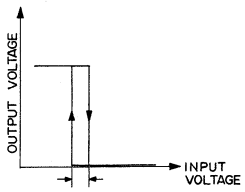

0.4V (VDD=5V)
0.45V(VDD=10V)
0.90V(VDD=15V)

TC40174BP (TOSHIBA)
MC14174BCP (MOTOROLA)
C-MOS D-TYPE FLIP-FLOP
—TOP VIEW—

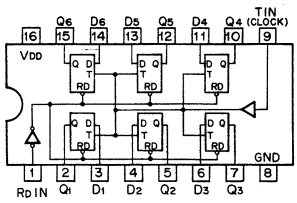

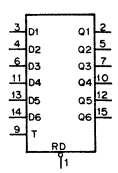

INPUTS			OUTPUT
T	D	RD	Q
↓	0	1	0
↓	1	1	1
↑	X	1	Q0
X	X	0	0

0; LOW LEVEL
1; HIGH LEVEL
X; DON'T CARE

TC40175BP (TOSHIBA)
MC14175BCP (MOTOROLA)
C-MOS D-TYPE FLIP-FLOP
-TOP VIEW-

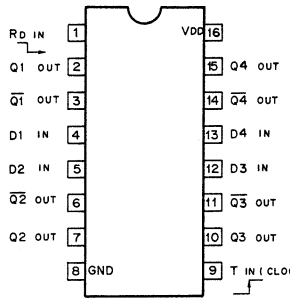

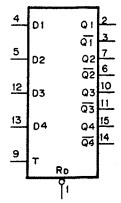

T	D	RD	Q	Q̄
↓	0	1	0	1
↓	1	1	1	0
↑	X	1	Q0	Q̄0
X	X	0	0	1

0; LOW LEVEL
1; HIGH LEVEL
X; DON'T CARE

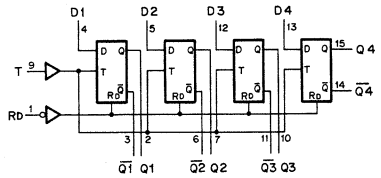

TC40H074P (TOSHIBA)
C-MOS HIGH SPEED D-TYPE FLIP-FLOP WITH DIRECT SET / RESET
— TOP VIEW—

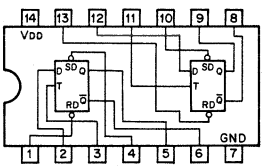

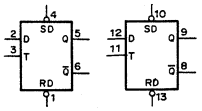

D-MODE

tn	tn + 1	
D	Q	Q̄
0	0	1
1	1	0

R-S MODE

INPUT		OUTPUT	
RD	SD	Q	Q̄
0	0	1	1
0	1	0	1
1	0	1	0
1	1	D-MODE	

0; LOW LEVEL
1; HIGH LEVEL

TC40H368P (TOSHIBA)
C-MOS INVERTING 3-STATE BUFFER
— TOP VIEW —

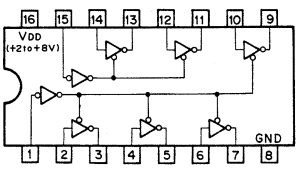

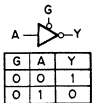

G	A	Y
0	0	1
0	1	0
1	X	HI-Z

0; LOW LEVEL
1; HIGH LEVEL
X; DON'T CARE
HI-Z; HIGH IMPEDANCE

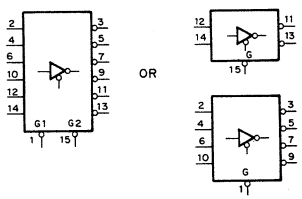

TC40H390P (TOSHIBA)
C-MOS DIVIDE-BY-2 AND DIVIDE-BY-5 COUNTER
— TOP VIEW —

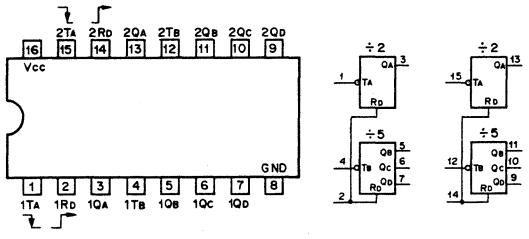

COUNT SEQUENCE
÷2 SECTION

COUNT	QA
0	0
1	1

÷5 SECTION

COUNT	QD	QC	QB
0	0	0	0
1	0	0	1
2	0	1	0
3	0	1	1
4	1	0	0

RESET/COUNT FUNCTION

RD	QD	QC	QB	QA
1	0	0	0	0
0	COUNT			

0; LOW LEVEL
1; HIGH LEVEL

TA7069P (TOSHIBA)
VIDEO AMPLIFIER
— SIDE VIEW —

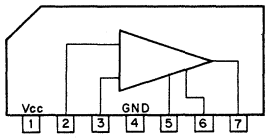

TC5501P (TOSHIBA) (ACCESS TIME = 450 nS)
TC5501P-1 (TOSHIBA) (ACCESS TIME = 650 nS)
μPD5101LC-1 (NEC) (ACCESS TIME = 450 nS)
5101L-1 (INTEL) (ACCESS TIME = 450 nS)
C-MOS 1024-BIT(256x4) STATIC RAM
— TOP VIEW —

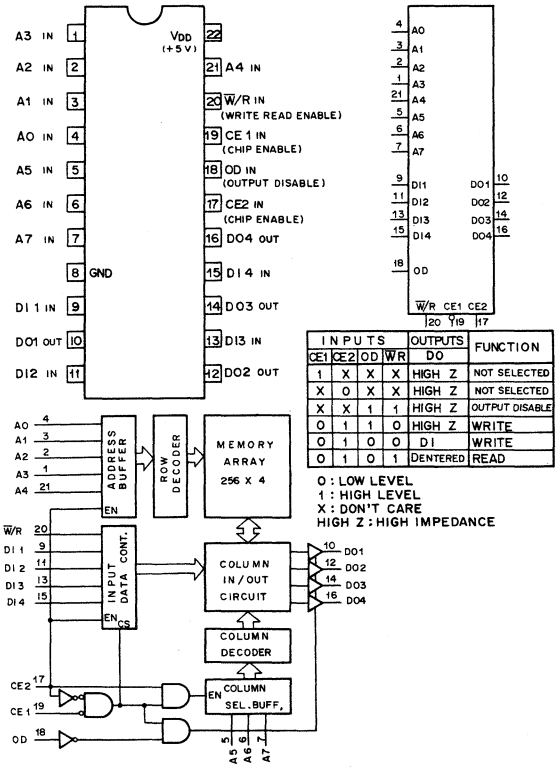

INPUTS				OUTPUTS	FUNCTION
CE1	CE2	OD	W/R	DO	
1	X	X	X	HIGH Z	NOT SELECTED
X	0	X	X	HIGH Z	NOT SELECTED
X	X	1	1	HIGH Z	OUTPUT DISABLE
0	1	1	0	HIGH Z	WRITE
0	1	0	0	DI	WRITE
0	1	0	1	DENTERED	READ

0 : LOW LEVEL
1 : HIGH LEVEL
X : DON'T CARE
HIGH Z : HIGH IMPEDANCE

TD62105P (TOSHIBA)
TTL INVERTING DRIVER WITH OPEN COLLECTOR
— TOP VIEW —

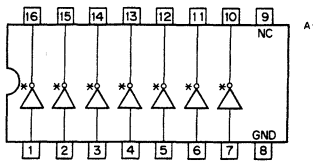

Y=Ā	
A	Y
0	1
1	0

0; LOW LEVEL
1; HIGH LEVEL

* OPEN COLLECTOR

TL072CP (TI)
TL072ACP (TI)
TL072BCP (TI)
OPERATIONAL AMPLIFIER
(LOW-NOISE, JFET-INPUT)
—TOP VIEW—

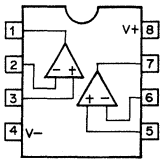

TL074CN (TI)
TL074ACN (TI)
TL074BCN (TI)
OPERATIONAL AMPLIFIER
(LOW-NOISE, JFET-INPUT)
— TOP VIEW—

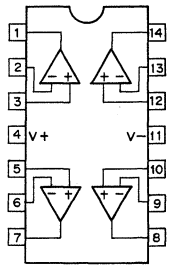

TL081CP (TI)
OPERATIONAL AMPLIFIER
(JFET INPUT)
— TOP VIEW —

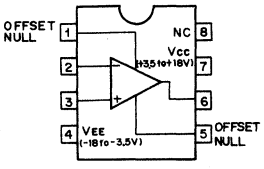

TL082CP (TI)
μPC4082C (NEC)
TL082ACP (TI)
TL082BCP (TI)
OPERATIONAL AMPLIFIER
(JFET-INPUT)
- TOP VIEW -

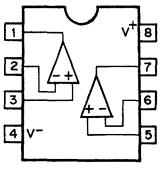

TL084CN (TI)
TL084ACN (TI)
TL084BCN (TI)
OPERATIONAL AMPLIFIER
(JFET-INPUT)
—TOP VIEW—

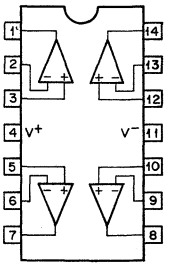

TL191CN (TI)
TWIN DUAL COMPLEMENTARY BI-MOS ANALOG SWITCH
— TOP VIEW —

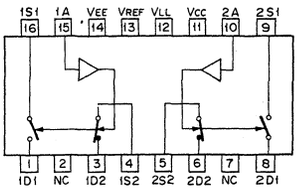

A	S1	S2
1	ON	OFF
0	OFF	ON

0; LOW LEVEL
1; HIGH LEVEL

TL489CP (TI)
5-STEP ANALOG LEVEL DETECTOR WITH OPEN COLLECTOR OUTPUT
— TOP VIEW —

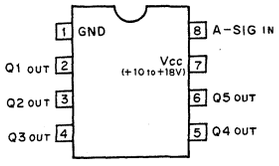

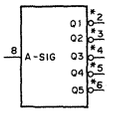

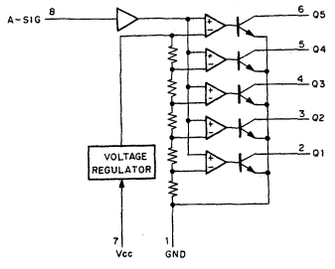

INPUT A-SIG(V)	OUTPUTS Q5	Q4	Q3	Q2	Q1
<≃0.2	1	1	1	1	1
≃0.2 to ≃0.4	1	1	1	1	0
≃0.4 to ≃0.6	1	1	1	0	0
≃0.6 to ≃0.8	1	1	0	0	0
≃0.8 to ≃1.0	1	0	0	0	0
≃1.0<	0	0	0	0	0

0; LOW LEVEL
1; HIGH LEVEL

TL601CP (TI)
P-MOS ANALOG SWITCH
— TOP VIEW —

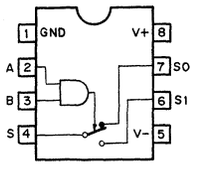

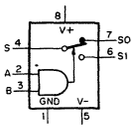

CONT IN A	B	ON CHANNEL
0	0	S0
0	1	S0
1	0	S0
1	1	S1

0; LOW LEVEL
1; HIGH LEVEL

TL607CP (TI)
SN72607P (TI)
MOS ANALOG SWITCH
— TOP VIEW —

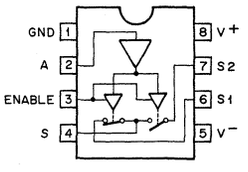

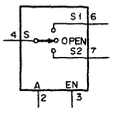

INPUTS A	EN	SW
X	0	OPEN
0	1	6–7
1	1	6–7

0; LOW LEVEL
1; HIGH LEVEL
X; DON'T CARE

TL610CP (TI)
MOS ANALOG SWITCH
— TOP VIEW —

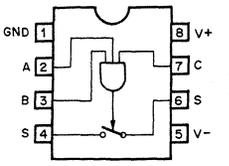

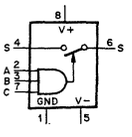

CONT IN A	B	C	S
0	X	X	OFF(OPEN)
X	0	X	OFF(OPEN)
X	X	0	OFF(OPEN)
1	1	1	ON(CLOSED)

0; LOW LEVEL
1; HIGH LEVEL
X; DON'T CARE

TL820CN (TI)
VOLTAGE COMPARATOR (DIFFERENTIAL INPUTS)
— TOP VIEW —

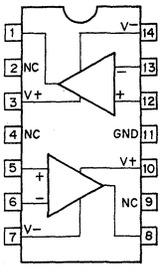

μA723DC (FSC)
HA17723G (HITACHI)
VOLTAGE REGULATOR
— TOP VIEW —

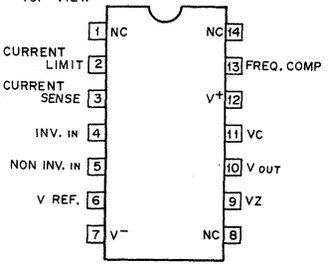

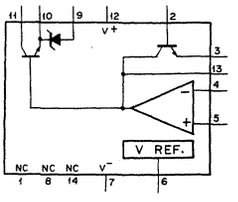

μA78□□UC (FSC)
μPC143□□H (NEC)
μPC78□□H (NEC)
POSITIVE VOLTAGE REGULATOR (1A)

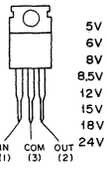

5V	μA7805UC	FS7805	μPC14305H	μPC7805H
6V	μA7806UC			
8V	μA7808UC		μPC14308H	μPC7808H
8.5V	μA7885UC			
12V	μA7812UC	FS7812	μPC14312H	μPC7812H
15V	μA7815UC	FS7815	μPC14315H	μPC7815H
18V	μA7818UC		μPC14318H	μPC7818H
24V	μA7824UC	FS7824	μPC14324H	μPC7824H

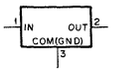

μA78L□ □AWV (FSC)
μA78L□ □ACL (TI)
μPC78L□□ (NEC)
μPC78L□□A (NEC)
POSITIVE VOLTAGE REGULATOR(100mA)

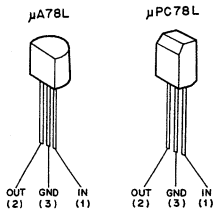

2.6V	μA78L26AWV	μA78L02ACL	
5V	μA78L05AWV	μA78L05ACL	μPC78L05(A)
6.2V	μA78L62AWV	μA78L06ACL	
8V		μA78L08ACL	μPC78L08
8.2V	μA78L82AWV		
9V	μA78L09AWV	μA78L09ACL	
10V		μA78L10ACL	
12V	μA78L12AWV	μA78L12ACL	μPC78L12
15V	μA78L15AWV	μA78L15ACL	μPC78L15
18V	μA78L18AWV		
24V	μA78L24AWV		

uA796HC (FSC)
uA796HCA (FSC)
DOUBLE-BALANCED MOD/DEMOD.
— BOTTOM VIEW —

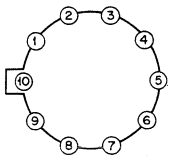

1 +SIGNAL INPUT
2 GAIN ADJUST
3 GAIN ADJUST
4 −SIGNAL INPUT
5 BIAS
6 +OUTPUT
7 +CARRIER INPUT
8 −CARRIER INPUT
9 −OUTPUT
10 VEE

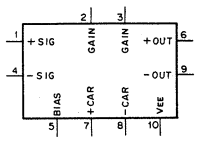

μA796PC (FSC)
MC1496P (MOTOROLA)
BALANCED MODULATOR / DEMODULATOR
−TOP VIEW−

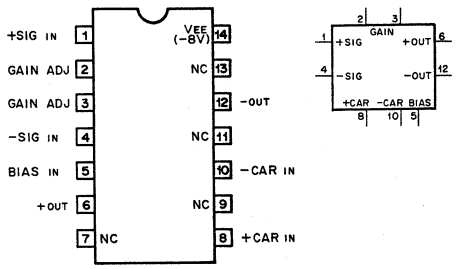

μPC91A (NEC)
ANALOG SWITCH
−BOTTOM VIEW−

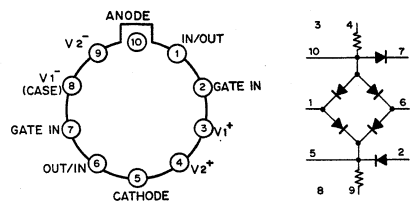

μPC159A (NEC)
OPERATIONAL AMPLIFIER
(HIGH SPEED, WIDE BANDWIDTH)
−BOTTOM VIEW−

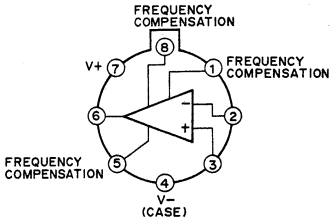

μPC311C (NEC)
VOLTAGE COMPARATOR
−TOP VIEW−

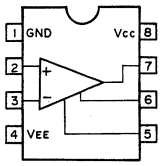

uPC272C (NEC)
uPC319C (NEC)
DUAL VOLTAGE COMPARATOR
— TOP VIEW —

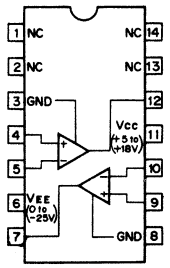

μPC324C (NEC)
QUAD. OP AMPLIFIER
−TOP VIEW−

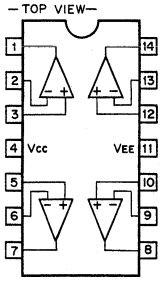

μPC339C (NEC)
COMPARATOR
−TOP VIEW−

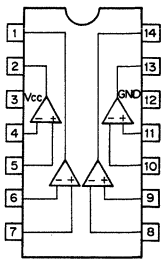

μPC358C (NEC)
LM358P (TI)
DUAL OPERATIONAL AMPLIFIERS
—TOP VIEW—

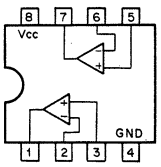

μPC393C (NEC)
μPC393G (NEC)
VOLTAGE COMPARATOR
−TOP VIEW−

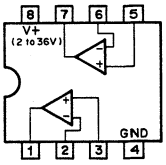

μPC648D(NEC)

12-BIT D/A CONVERTER WITH OPEN COLLECTOR OUTPUT
— TOP VIEW —

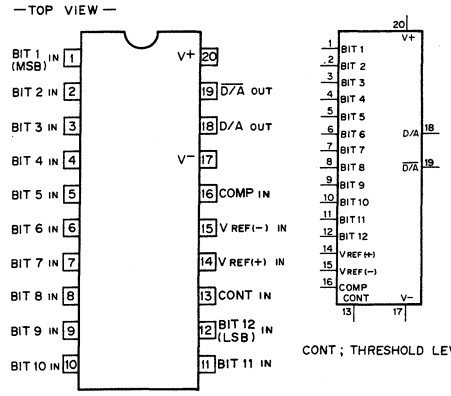

CONT ; THRESHOLD LEVEL CONTROL

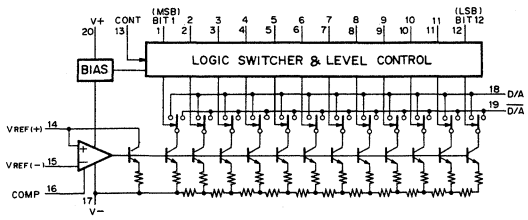

uPC649C (NEC)

SAMPLE AND HOLD CIRCUIT
— TOP VIEW —

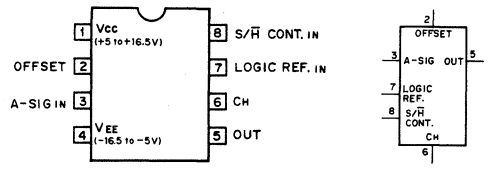

S/H CONT. ; SAMPLE/HOLD CONTROL
CH ; EXTERNAL HOLD CAPACITOR

μPC4556C (NEC)

OPERATIONAL AMPLIFIER
(WIDE BAND, DECOMPENSATED)
—TOP VIEW—

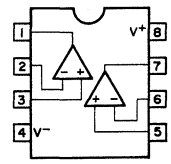

μPC4557C (NEC)

OPERATIONAL AMPLIFIER
(WIDE BAND, LOW NOISE)
—TOP VIEW—

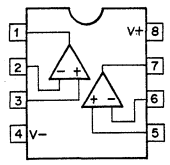

μPD8253C-5 (NEC)
8253-5 (INTEL)

N-MOS PROGRAMABLE INTERVAL TIMER
— TOP VIEW —

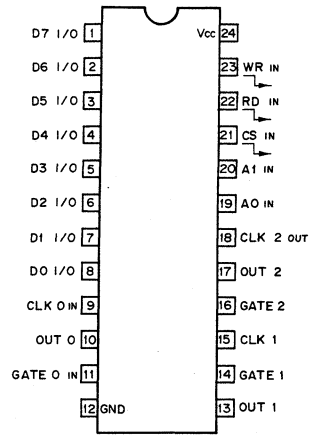

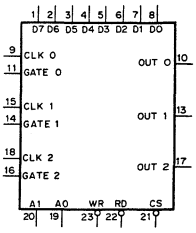

D7-D0 ; 8-BIT DATA I/O
CLK N ; COUNTER CLOCK
GATE N ; COUNTER GATE
OUT N ; COUNTER OUTPUT
RD ; READ COUNTER
WR ; WRITE CMD OR DATA
CS ; CHIP SELECT
A1, A0 ; COUNTER SELECT

FUNCTION TABLE

INPUTS					FUNCTION
CS	RD	WR	A1	A0	
0	1	0	0	0	Load Counter No. 0
0	1	0	0	1	Load Counter No. 1
0	1	0	1	0	Load Counter No. 2
0	1	0	1	1	Control Word
0	0	1	0	0	Read Counter 0
0	0	1	0	1	Read Counter 1
0	0	1	1	0	Read Counter 2
0	0	1	1	1	No-Operation (HI-Z)
1	X	X	X	X	Disable (HI-Z)
0	1	1	X	X	No-Operation (HI-Z)

0;LOW LEVEL
1;HIGH LEVEL
X;DON'T CARE
HI-Z;HIGH IMPEDANCE

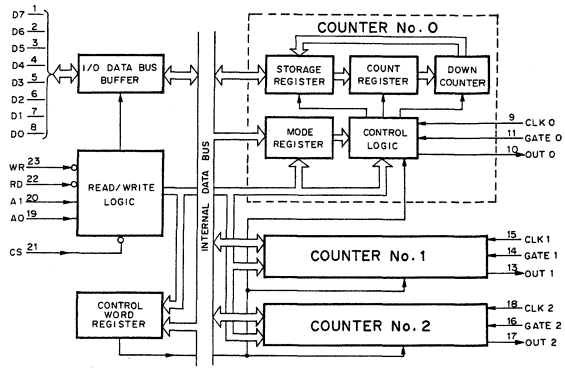

CONTROL WORD FORMAT

D7	D6	D5	D4	D3	D2	D1	D0
SC1	SC2	RL1	RLO	M2	M1	MO	BCD

BCD	OPERATION
0	16-BIT BINARY
1	BCD(4-DECADE)

M2	M1	MO	MODE
0	0	0	0
0	0	1	1
X	1	0	2
X	1	1	3
1	0	0	4
1	0	1	5

RL1	RLO	OPERATION
0	0	COUNTER LATCHING
0	1	READ/LOAD LSB ONLY
1	0	READ/LOAD MSB ONLY
1	1	LSB FIRST THEN MSB

SC1	SCO	SELECTED COUNTER
0	0	COUNTER No. 0
0	1	COUNTER No. 1
1	0	COUNTER No. 2
1	1	ILLEGAL

MB7051 (FUJITSU)
256-BIT (32x 8) PROM (3-STATE OUTPUT)

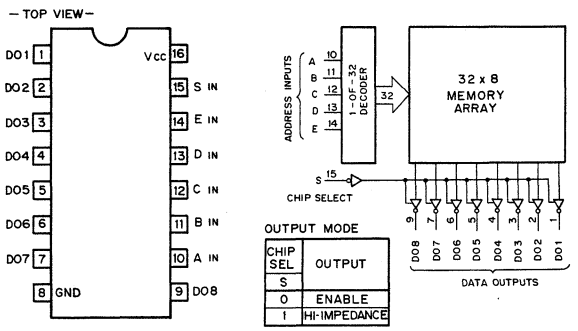

OUTPUT MODE

CHIP SEL	OUTPUT
S	
0	ENABLE
1	HI-IMPEDANCE

MB7051-A1U1
PROGRAMMED DATA

WORD (ADDRESS)	DATA OUTPUTS (IN HEXADECIMAL)
0 – 15	3F. 1E. 39. 1B. 27. 36. 20. 3F. 3F. 2D. 36. 27. 1B. 39. 1E. 3F.
16 – 31	3F. 3F. 3F. 3F. 3F. 3F. 3F. 3F. 3F. 3F. 3F. 3F. 3F. 3F. 3F. 3F.

MB7051-E1U1
PROGRAMMED DATA

WORD (ADDRESS)	DATA OUTPUTS (IN HEXADECIMAL)
0 – 15	00. 03. 00. 03. 01. 03. 01. 03. 00. 03. 00. 03. 01. 03. 01. 03.
16 – 31	00. 03. 02. 03. 01. 03. 01. 03. 00. 03. 02. 03. 01. 03. 01. 03.

MB7051-L1A1
PROGRAMMED DATA

WORD (ADDRESS)	DATA OUTPUTS (IN HEXADECIMAL)
0 – 15	FF. FB. F1. FD. FF. DF. FF. F9. 80. 4A. E0. F8. F0. DE. FC. FF.
16 – 31	D5. B0. 88. 8E. F2. D0. F2. 7E. 88. C3. F1. F9. FD. FE. FC. FC.

MB7051-L1U1
PROGRAMMED DATA

WORD (ADDRESS)	DATA OUTPUTS (IN HEXADECIMAL)
0 – 15	FF. FE. F8. F7. FF. E7. FF. FA. 7F. 81. DF. FB. F6. E7. F4. FF.
16 – 31	95. B0. B0. E2. F4. D8. F4. E6. 88. 91. F7. FC. F3. FD. FC. FC.

MB7051-L2A1
PROGRAMMED DATA

WORD (ADDRESS)	DATA OUTPUTS (IN HEXADECIMAL)
0 – 15	3A. 3A. 38. B8. 98. B8. BE. BE. B6. B7. 37. 33. 31. B1. B1. B7.
16 – 31	B7. B6. B6. B6. F6. E6. F6. B6. B6. B6. 36. 36. 36. 3E. 3E. 3A.

MB7051-L2U1
PROGRAMMED DATA

WORD (ADDRESS)	DATA OUTPUTS (IN HEXADECIMAL)
0 – 15	3A. 3A. 38. B8. 98. B8. BE. BE. B6. B7. 37. 33. 31. B1. B1. B7.
16 – 31	B7. B6. B6. B6. F6. E6. F6. B6. B6. B6. 36. 36. 36. 3E. 3E. 3A.

MB7051-R2U1
PROGRAMMED DATA

WORD (ADDRESS)	DATA OUTPUTS (IN HEXADECIMAL)
0 – 15	10. 10. 04. 05. 0E. 0F. 18. 18. 30. 10. 04. 05. 0E. 0F. 18. 18.
16 – 31	17. 17. 00. 01. 0A. 0B. 1F. 3F. 17. 17. 00. 01. 0A. 0B. 1F. 1F.

MB7052 (FUJITSU)

1024-BIT (256 X 4) PROM (3-STATE OUTPUT)

— TOP VIEW —

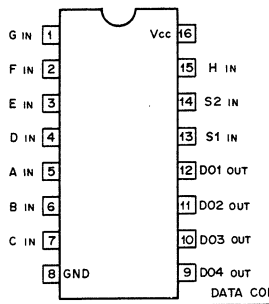

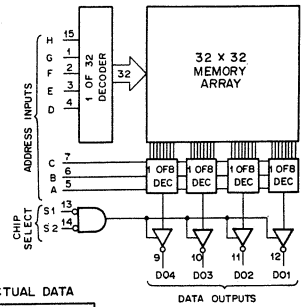

WORD / ADDRESS TABLE

WORD	ADDRESS INPUTS							
	H	G	F	E	D	C	B	A
0	0	0	0	0	0	0	0	0
1	0	0	0	0	0	0	0	1
2	0	0	0	0	0	0	1	0
⋮	⋮	⋮	⋮	⋮	⋮	⋮	⋮	⋮
253	1	1	1	1	1	1	0	1
254	1	1	1	1	1	1	1	0
255	1	1	1	1	1	1	1	1

DATA CODE / ACTUAL DATA

DATA CODE		ACTUAL DATA			
		DO4	DO3	DO2	DO1
0	0	0	0	0	0
1	1	0	0	0	1
2	2	0	0	1	0
3	3	0	0	1	1
4	4	0	1	0	0
5	5	0	1	0	1
6	6	0	1	1	0
7	7	0	1	1	1
8	8	1	0	0	0
9	9	1	0	0	1
10	A	1	0	1	0
11	B	1	0	1	1
12	C	1	1	0	0
13	D	1	1	0	1
14	E	1	1	1	0
15	F	1	1	1	1

IN HEXADECIMAL
IN DECIMAL

OUTPUT MODE

CHIP SEL		OUTPUT
S1	S2	
0	0	ENABLE
X	1	HI-IMPEDANCE
1	X	

0 ; LOW LEVEL
1 ; HIGH LEVEL
X ; DON'T CARE

MB7052-R1U1

PROGRAMMED DATA

WORD (ADDRESS)	DATA OUTPUTS (IN HEXADECIMAL)
0 – 15	0. 3. 6. 1. 7. 2. 3. 2. 2. 3. 2. 7. 1. 6. 3. 0.
16 – 31	0. 3. 6. 1. 7. 2. 3. 2. 2. 3. 2. 7. 1. 6. 3. 0.
32 – 47	8. B. E. 9. F. A. B. A. A. B. A. F. 9. E. B. 8.
48 – 63	0. 3. 6. 1. 7. 2. 3. 2. 2. 3. 2. 7. 1. 6. 3. 0.
64 – 79	4. 3. 6. 5. 7. 6. 7. 2. 2. 7. 6. 7. 5. 6. 3. 4.
80 – 95	C. B. E. D. F. E. F. A. A. F. E. F. D. E. B. C.
96 – 111	4. 3. 6. 5. 7. 6. 7. 2. 2. 7. 6. 7. 5. 6. 3. 4.
112 – 127	4. 3. 6. 5. 7. 6. 7. 2. 2. 7. 6. 7. 5. 6. 3. 4.
128 – 143	0. 3. 6. 1. 7. 2. 3. 2. 2. 3. 2. 7. 1. 6. 3. 0.
144 – 159	0. 3. 6. 1. 7. 2. 3. 2. 2. 3. 2. 7. 1. 6. 3. 0.
160 – 175	8. B. E. 9. F. A. B. A. A. B. A. F. 9. E. B. 8.
176 – 191	0. 3. 6. 1. 7. 2. 3. 2. 2. 3. 2. 7. 1. 6. 3. 0.
192 – 207	4. 3. 6. 5. 7. 6. 7. 2. 2. 7. 6. 7. 5. 6. 3. 4.
208 – 223	C. B. E. D. F. E. F. A. A. F. E. F. D. E. B. C.
224 – 239	4. 3. 6. 5. 7. 6. 7. 2. 2. 7. 6. 7. 5. 6. 3. 4.
240 – 255	4. 3. 6. 5. 7. 6. 7. 2. 2. 7. 6. 7. 5. 6. 3. 4.

MB7053 (FUJITSU)

2048-BIT (512x4) PROM (3-STATE OUTPUT)

— TOP VIEW —

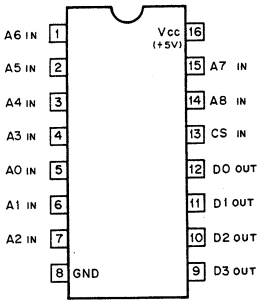

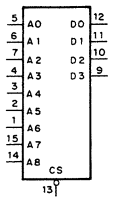

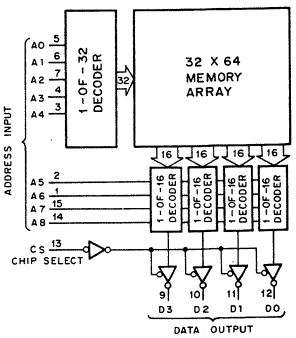

OUTPUT MODE

CHIP SEL	OUTPUT
CS	
0	ENABLE
1	HI-IMPEDANCE

0 ; LOW LEVEL
1 ; HIGH LEVEL

WORD / ADDRESS TABLE

WORD		ADDRESS INPUTS								
		A8	A7	A6	A5	A4	A3	A2	A1	AO
0	000	0	0	0	0	0	0	0	0	0
1	001	0	0	0	0	0	0	0	0	1
2	002	0	0	0	0	0	0	0	1	0
⋮	⋮	⋮	⋮	⋮	⋮	⋮	⋮	⋮	⋮	⋮
9	009	0	0	0	0	0	1	0	0	1
10	00A	0	0	0	0	0	1	0	1	0
11	00B	0	0	0	0	0	1	0	1	1
12	00C	0	0	0	0	0	1	1	0	0
13	00D	0	0	0	0	0	1	1	0	1
14	00E	0	0	0	0	0	1	1	1	0
15	00F	0	0	0	0	0	1	1	1	1
16	010	0	0	0	0	1	0	0	0	0
⋮	⋮	⋮	⋮	⋮	⋮	⋮	⋮	⋮	⋮	⋮
⋮	⋮	⋮	⋮	⋮	⋮	⋮	⋮	⋮	⋮	⋮
⋮	⋮	⋮	⋮	⋮	⋮	⋮	⋮	⋮	⋮	⋮
509	1FD	1	1	1	1	1	1	1	0	1
510	1FE	1	1	1	1	1	1	1	1	0
511	1FF	1	1	1	1	1	1	1	1	1

IN HEXADECIMAL
IN DECIMAL

DATA CODE / ACTUAL DATA

DATA CODE		ACTUAL DATA			
		D3	D2	D1	DO
0	0	0	0	0	0
1	1	0	0	0	1
2	2	0	0	1	0
3	3	0	0	1	1
4	4	0	1	0	0
5	5	0	1	0	1
6	6	0	1	1	0
7	7	0	1	1	1
8	8	1	0	0	0
9	9	1	0	0	1
10	A	1	0	1	0
11	B	1	0	1	1
12	C	1	1	0	0
13	D	1	1	0	1
14	E	1	1	1	0
15	F	1	1	1	1

IN HEXADECIMAL
IN DECIMAL

MB7054 (FUJITSU)
uPB426D (NEC)
4096-BIT (1024x4) PROM (3-STATE OUTPUT)
— TOP VIEW —

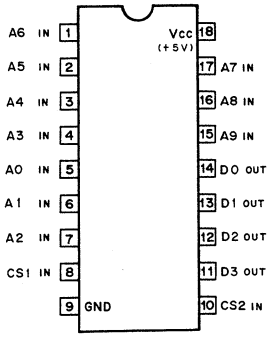

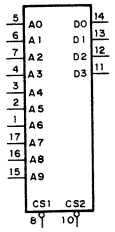

CHIP SEL		OUTPUT
CS1	CS2	
0	0	ENABLE
X	1	HI-IMPEDANCE
1	X	

0 ; LOW LEVEL
1 ; HIGH LEVEL
X ; DON'T CARE

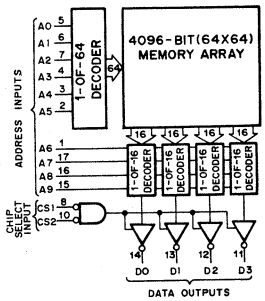

WORD/ADDRESS TABLE

WORD		ADDRESS INPUTS									
		A9	A8	A7	A6	A5	A4	A3	A2	A1	A0
0	000	0	0	0	0	0	0	0	0	0	0
1	001	0	0	0	0	0	0	0	0	0	1
2	002	0	0	0	0	0	0	0	0	1	0
:	:	:	:	:	:	:	:	:	:	:	:
9	009	0	0	0	0	0	0	1	0	0	1
10	00A	0	0	0	0	0	0	1	0	1	0
11	00B	0	0	0	0	0	0	1	0	1	1
12	00C	0	0	0	0	0	0	1	1	0	0
13	00D	0	0	0	0	0	0	1	1	0	1
14	00E	0	0	0	0	0	0	1	1	1	0
15	00F	0	0	0	0	0	0	1	1	1	1
16	010	0	0	0	0	0	1	0	0	0	0
:	:	:	:	:	:	:	:	:	:	:	:
:	:	:	:	:	:	:	:	:	:	:	:
:	:	:	:	:	:	:	:	:	:	:	:
1021	3FD	1	1	1	1	1	1	1	1	0	1
1022	3FE	1	1	1	1	1	1	1	1	1	0
1023	3FF	1	1	1	1	1	1	1	1	1	1

IN HEXADECIMAL
IN DECIMAL

DATA CODE/ACTUAL DATA

DATA CODE		ACTUAL DATA			
		D3	D2	D1	D0
0	0	0	0	0	0
1	1	0	0	0	1
2	2	0	0	1	0
3	3	0	0	1	1
4	4	0	1	0	0
5	5	0	1	0	1
6	6	0	1	1	0
7	7	0	1	1	1
8	8	1	0	0	0
9	9	1	0	0	1
10	A	1	0	1	0
11	B	1	0	1	1
12	C	1	1	0	0
13	D	1	1	0	1
14	E	1	1	1	0
15	F	1	1	1	1

IN HEXADECIMAL
IN DECIMAL

MBM2732A-35Z (FUJITSU)
M5L2732K (MITSUBISHI)
2732 (INTEL)
32K (4K-8) UV ERASABLE PROM
— TOP VIEW —

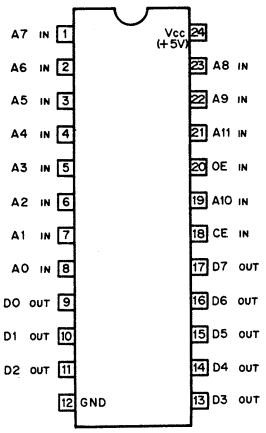

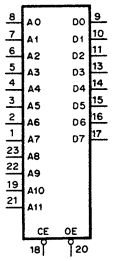

IN		OUT	FUNCTION
CE	OE	Dn	
0	0	DENTERED	READ
1	X	HIGH Z	STANDBY

0; LOW LEVEL
1; HIGH LEVEL
X; DON'T CARE
HIGH Z; HIGH IMPEDANCE

AO-A11 ; ADDRESS
CE ; CHIP ENABLE
OE ; OUTPUT ENABLE
DO-D7 ; DATA OUTPUTS

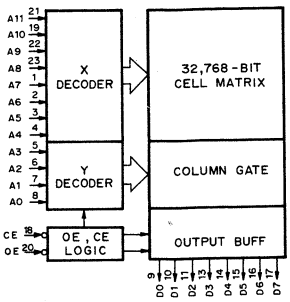

AU-27 BOARD (1-606-670-16)

Component Side

AU -27

AUD -1

REC EQ RV108

REC LEVEL RV109

AUD -2

REC EQ RV208

REC LEVEL RV209

1

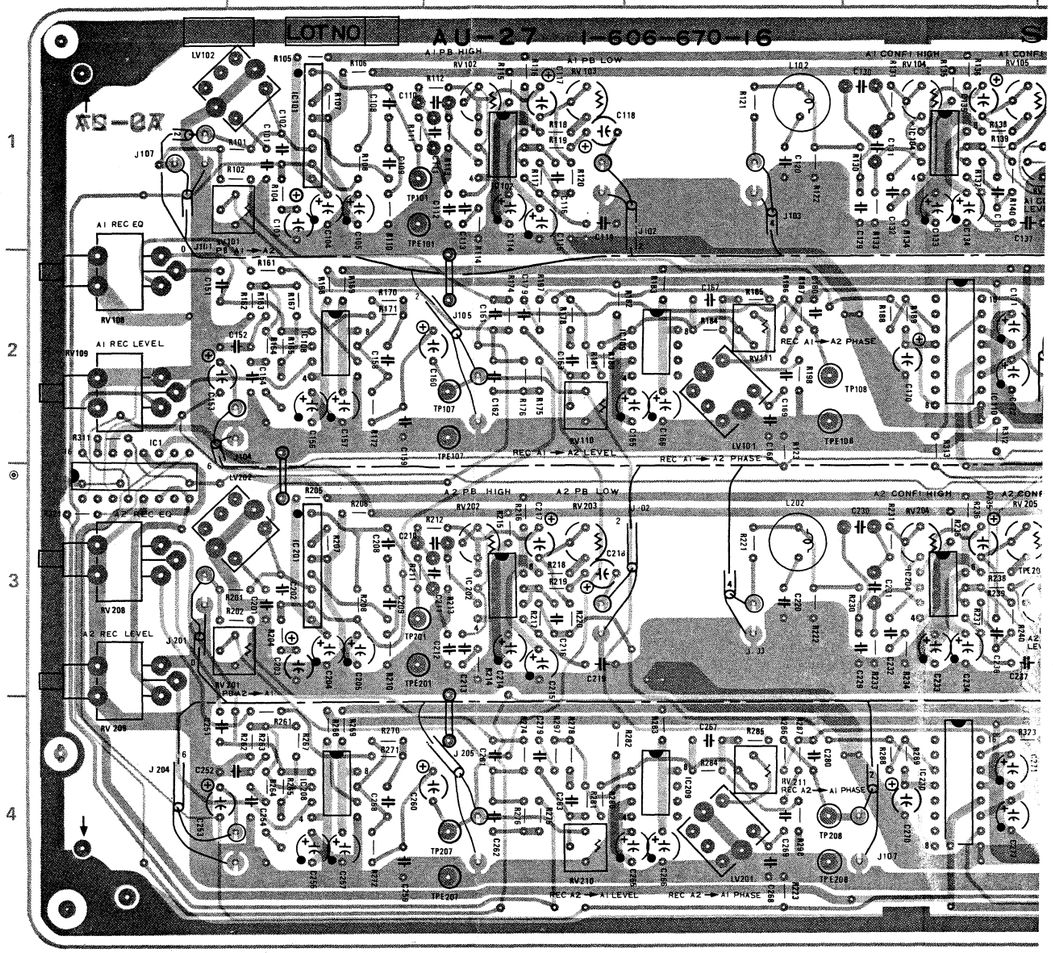

■ 1-606-670-16 COMPONENT SIDE

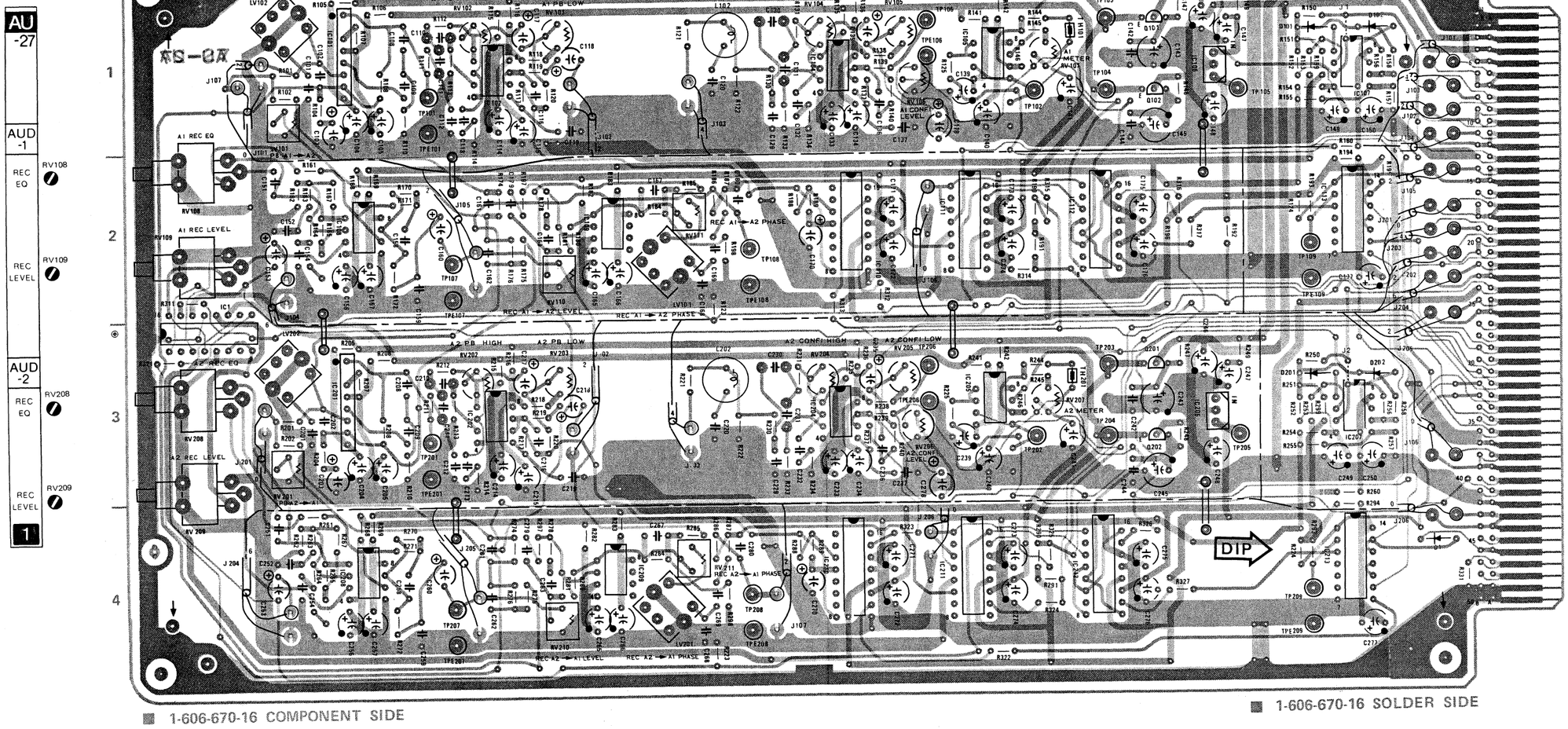

■ 1-606-670-16 COMPONENT SIDE

■ 1-606-670-16 SOLDER SIDE

AU-27 (1-606-670-13 & UP)

BVH-2000/PS/PM
BVH-2500/P

D1	4H	TH101	1F
D101	1H	TH202	3F
D102	1H		
D201	3H	TP101	1C
D202	3H	TP102	1F
		TP103	1G
IC1	3A	TP104	1G
		TP105	1G
IC101	1B	TP106	1F
IC102	1C	TP107	2C
IC104	1E	TP108	2D
IC105	1F	TP109	2H
IC106	1G	TP201	3C
IC107	1H	TP202	3F
IC108	2B	TP203	3G
IC109	2D	TP204	3G
IC110	2E	TP205	3G
IC111	2F	TP206	3F
IC112	2G	TP207	4C
IC113	2H	TP208	4D
IC201	3B	TP209	4H
IC202	3C		
IC204	3E	TPE101	1C
IC205	3F	TPE106	1F
IC206	3G	TPE107	2C
IC207	3H	TPE108	2D
IC208	4B	TPE109	2H
IC209	4D	TPE201	3C
IC210	4E	TPE206	3F
IC211	4F	TPE207	4C
IC212	4G	TPE208	4D
IC213	4H	TPE209	4H
J1	1H		
J2	3H		
		RV101	1B
LV101	2D	RV102	1C
LV102	1B	RV103	1C
LV201	4D	RV104	1E
LV202	3B	RV105	1E
		RV106	1F
Q101	1G	RV107	1F
Q102	1G	RV108	2A
Q201	3G	RV109	2A
Q202	3G	RV110	2C
		RV111	2D
		RV201	3B
		RV202	3C
		RV203	3C
		RV204	3E
		RV205	3E
		RV206	3F
		RV207	3F
		RV208	3A
		RV209	3A
		RV210	4C
		RV211	2D

AU-27 BOARD

Audio-1, 2 REC EQ/PB Amplifier

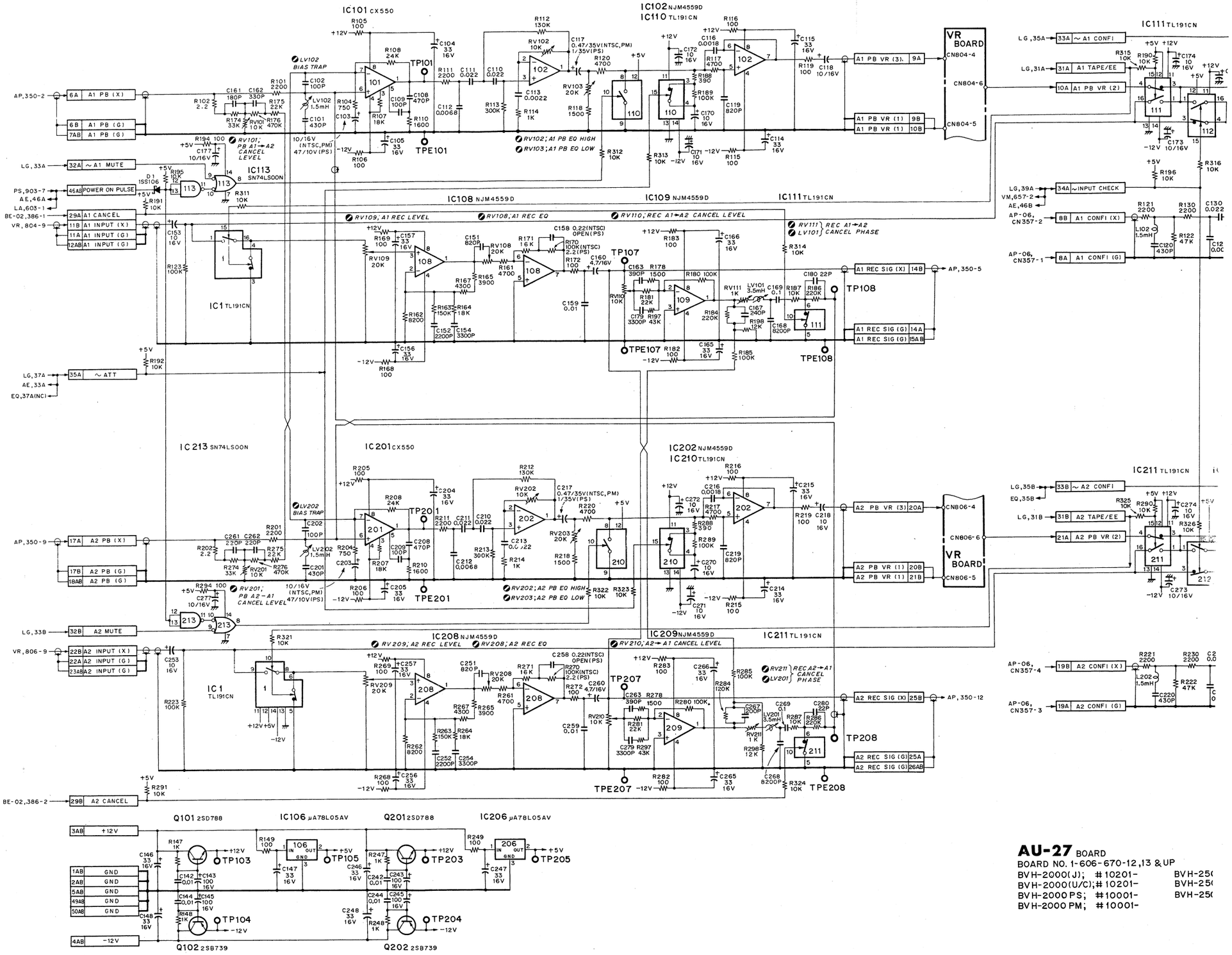

AU-27 BOARD

BOARD NO. 1-606-670-12,13 & UP

BVH-2000(J); #10201- BVH-25(

BVH-2000(U/C);#10201- BVH-25(

BVH-2000 PS; #10001- BVH-25(

BVH-2000 PM; #10001-

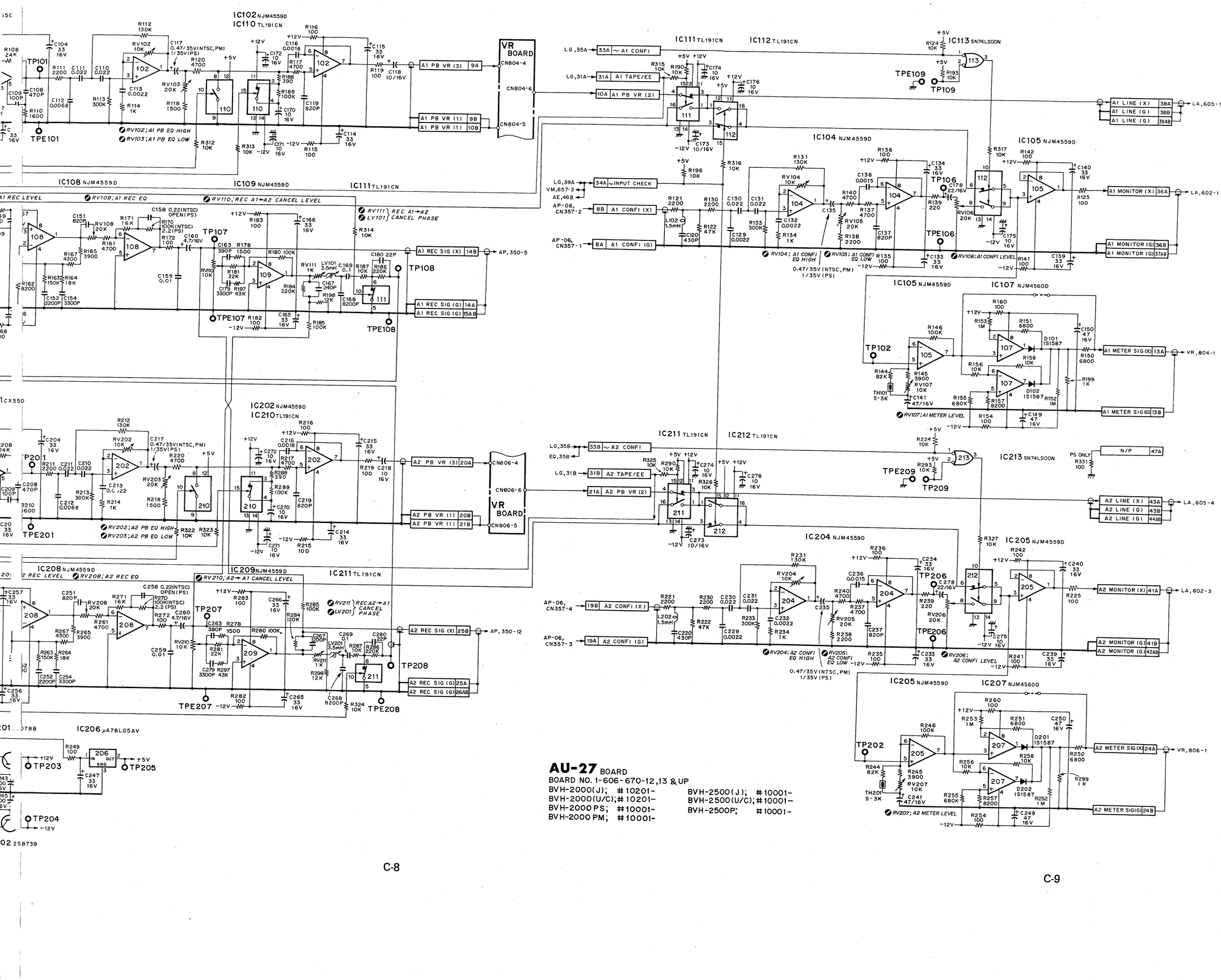

AU-27 BOARD

BOARD NO. 1-606-670-12,13 & UP

BVH-2000(J); #10201-	BVH-2500(J); #10001-
BVH-2000(U/C);#10201-	BVH-2500(U/C);#10001-
BVH-2000 PS; #10001-	BVH-2500P; #10001-
BVH-2000 PM; #10001-	

AE-03 BOARD (1-606-671-12)
Component Side

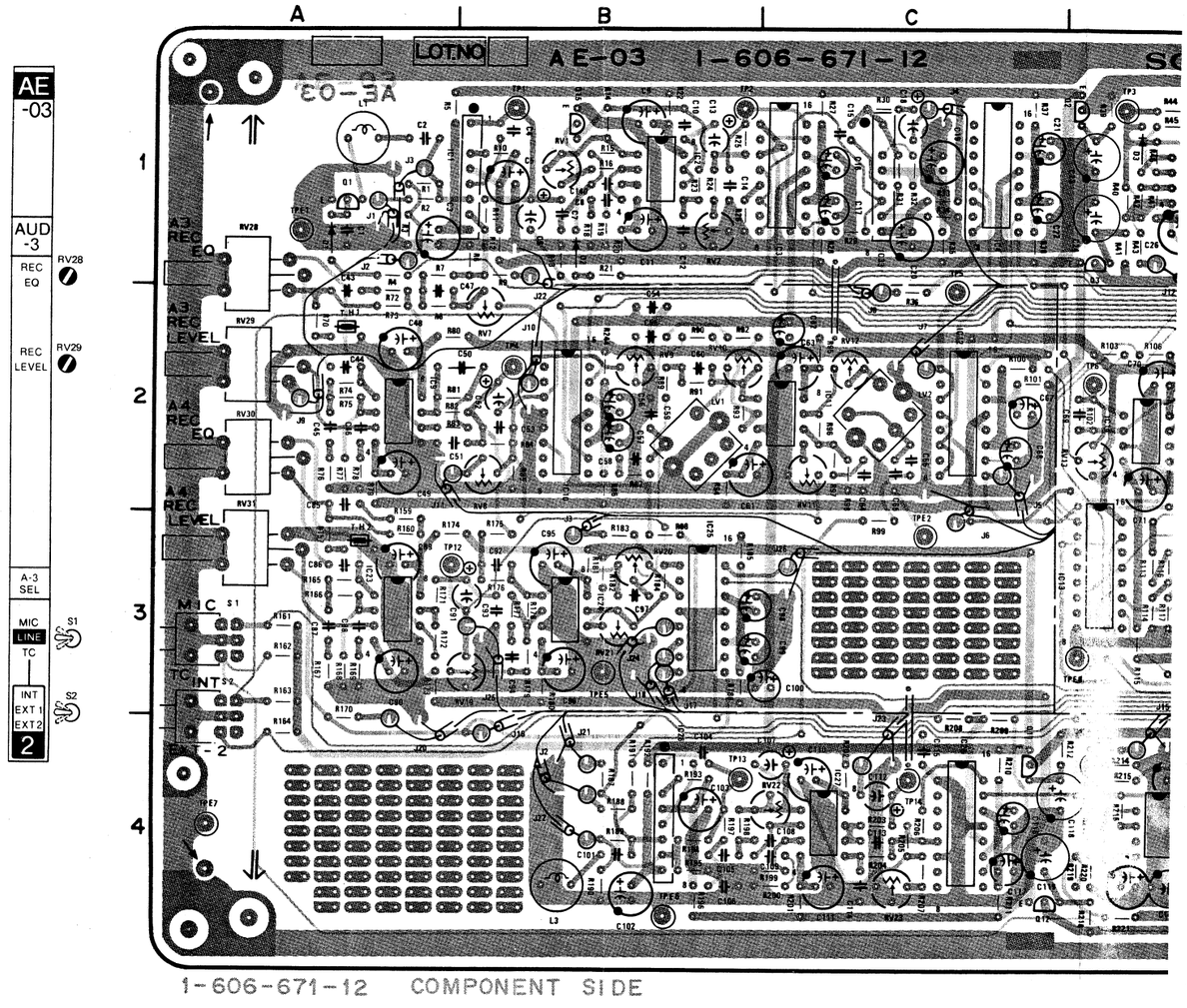

1-606-671-12 COMPONENT SIDE

AE-03 (FOR 00/02) CARD RACK 1-606-671-12

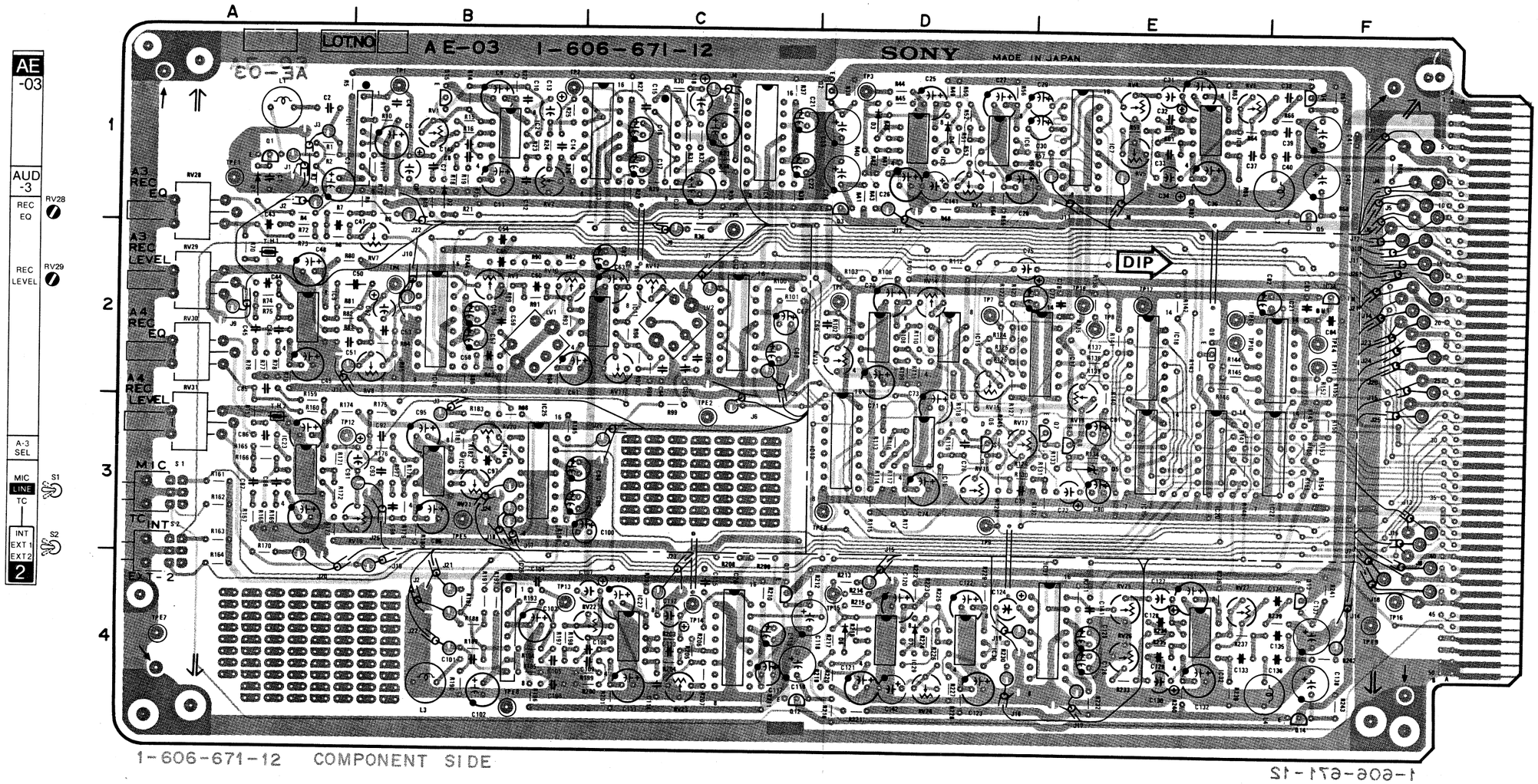

AE-03 (1-606-671-12)

BVH-2000(J,U/C)		RV1	1B
BVH-2000PS		RV2	1B
		RV3	1D
D1	1A	RV4	1E
D2	1B	RV5	1E
D3	1D	RV6	1E
D4	1D	RV8	2B
D5	3E	RV9	2B
D8	3C	RV12	2C
D9	3C	RV13	2D
		RV15	2D
IC1	1B	RV16	3D
IC2	1B	RV17	3D
IC3	1C	RV18	2E
IC4	1C	RV28	1A
IC5	1D	RV29	2A
IC6	1D	RV32	3C
IC7	1E		
IC8	1E	S1	3A
IC9	2A	S2	4A
IC10	2B		
IC11	2C	TP1	1B
IC12	2C	TP2	1B
IC13	3D	TP3	1D
IC14	2D	TP4	2B
IC15	2D	TP5	2C
IC16	3D	TP6	2D
IC17	2E	TP7	2D
IC18	2E	TP8	2E
IC19	3E	TP9	3C
IC20	3E	TP11	2F
IC21	2F	TP17	2E
IC22	3F	TP18	2E
IC33	1C		
IC34	2F	TPE1	1A
		TPE2	3C
LV2	2C	TPE4	2F
		TPE7	4A
Q1	1A	TPE8	3D
Q2	1D	TPE9	4F
Q3	1D		
Q4	1F		
Q5	1F		
Q6	3D		
Q7	3E		
Q8	3E		
Q9	2E		
Q15	1B		

AE-03 BOARD

Audio-3 REC EQ/PB Amplifier

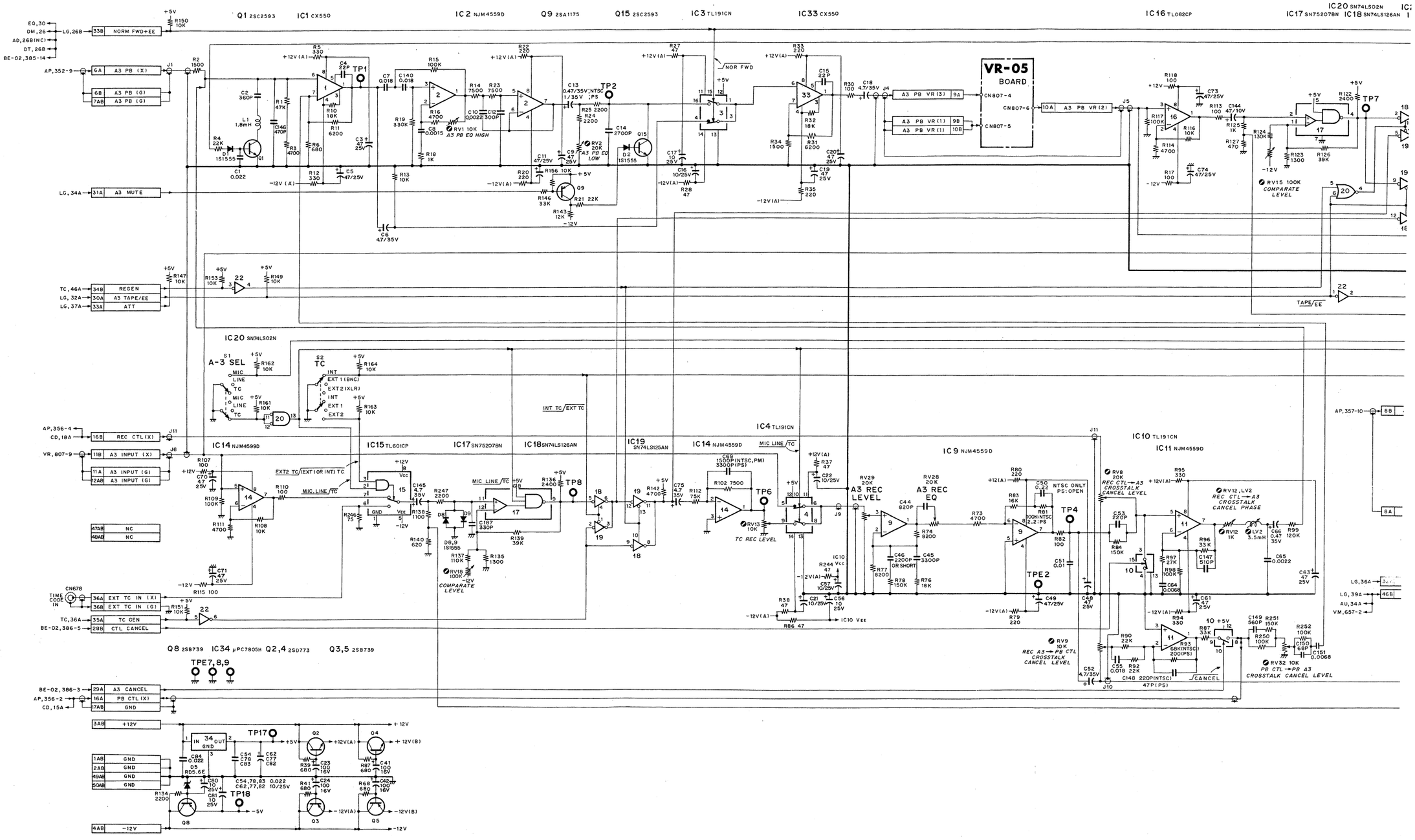

1-606-671-11, 12 CARD RACK AE-03

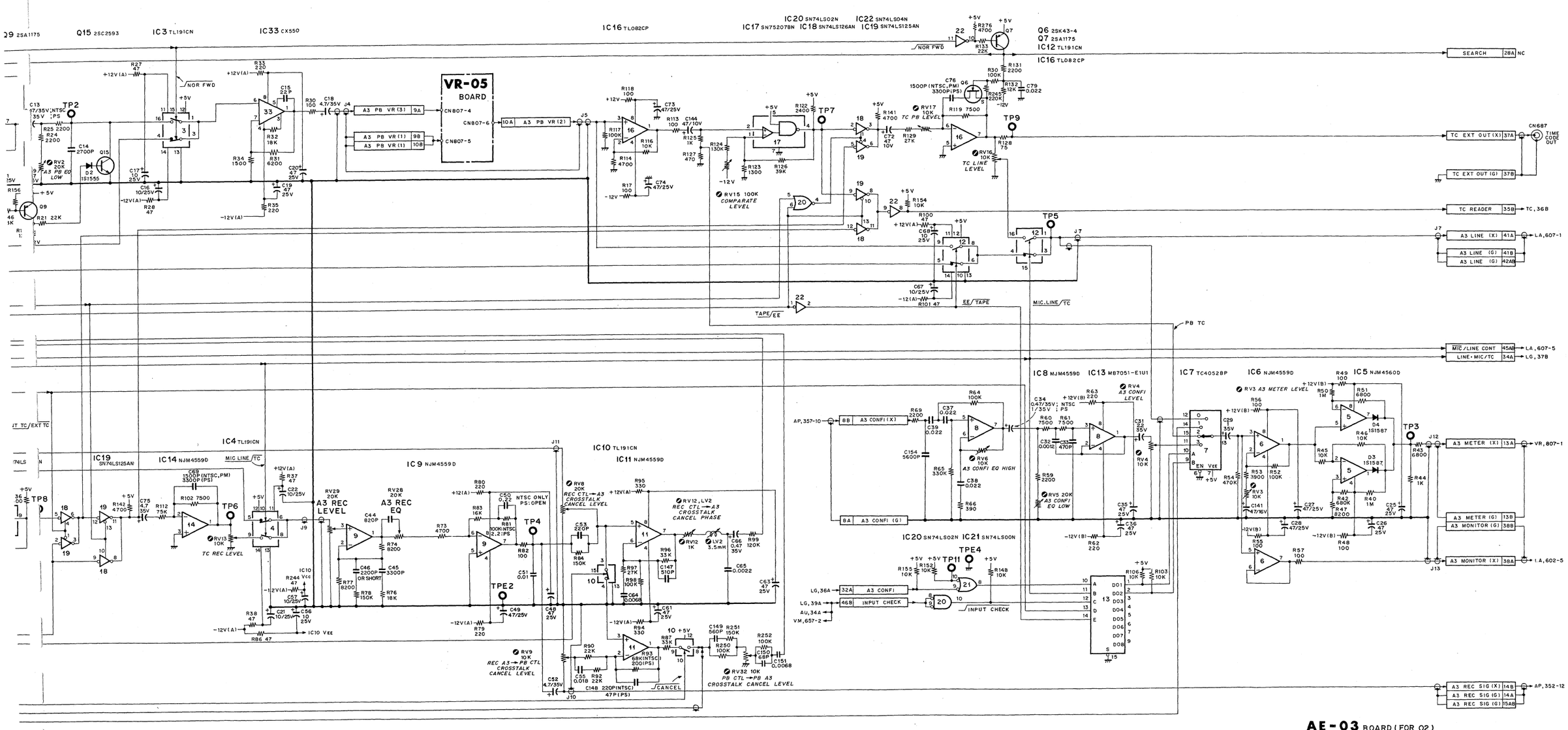

AE-03 BOARD (FOR 02)
BOARD NO. 1-606-671-11/-12
BVH-2000(J); # 10001-10499
BVH-2000(U/C); # 10001-10499
BVH-2000PS; # 10001-10299

AE-03 BOARD (1-606-671-16)

Component Side

BVH-2000PS
(for 04 model)

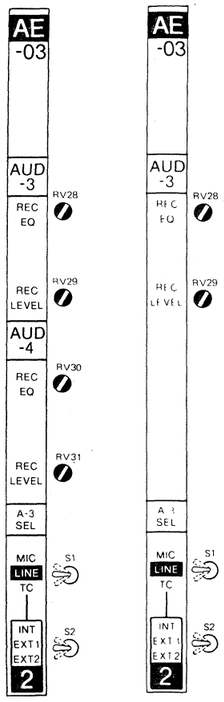

BVH-2000(J, U/C)
BVH-2000PS
BVH-2000PM
(for 02/00 models)

BVH-2500(J,U/C)
BVH-2500P

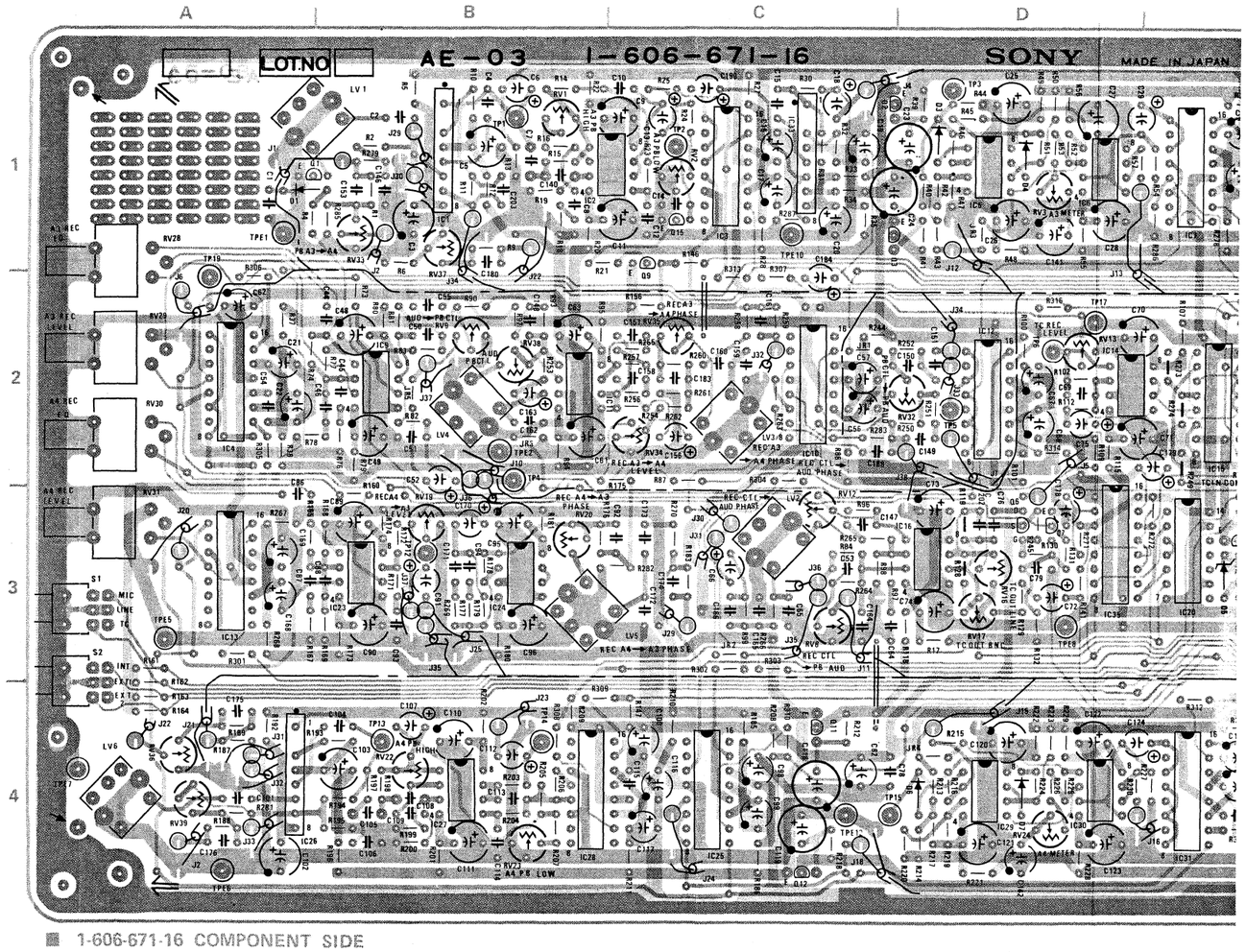

■ 1-606-671-16 COMPONENT SIDE

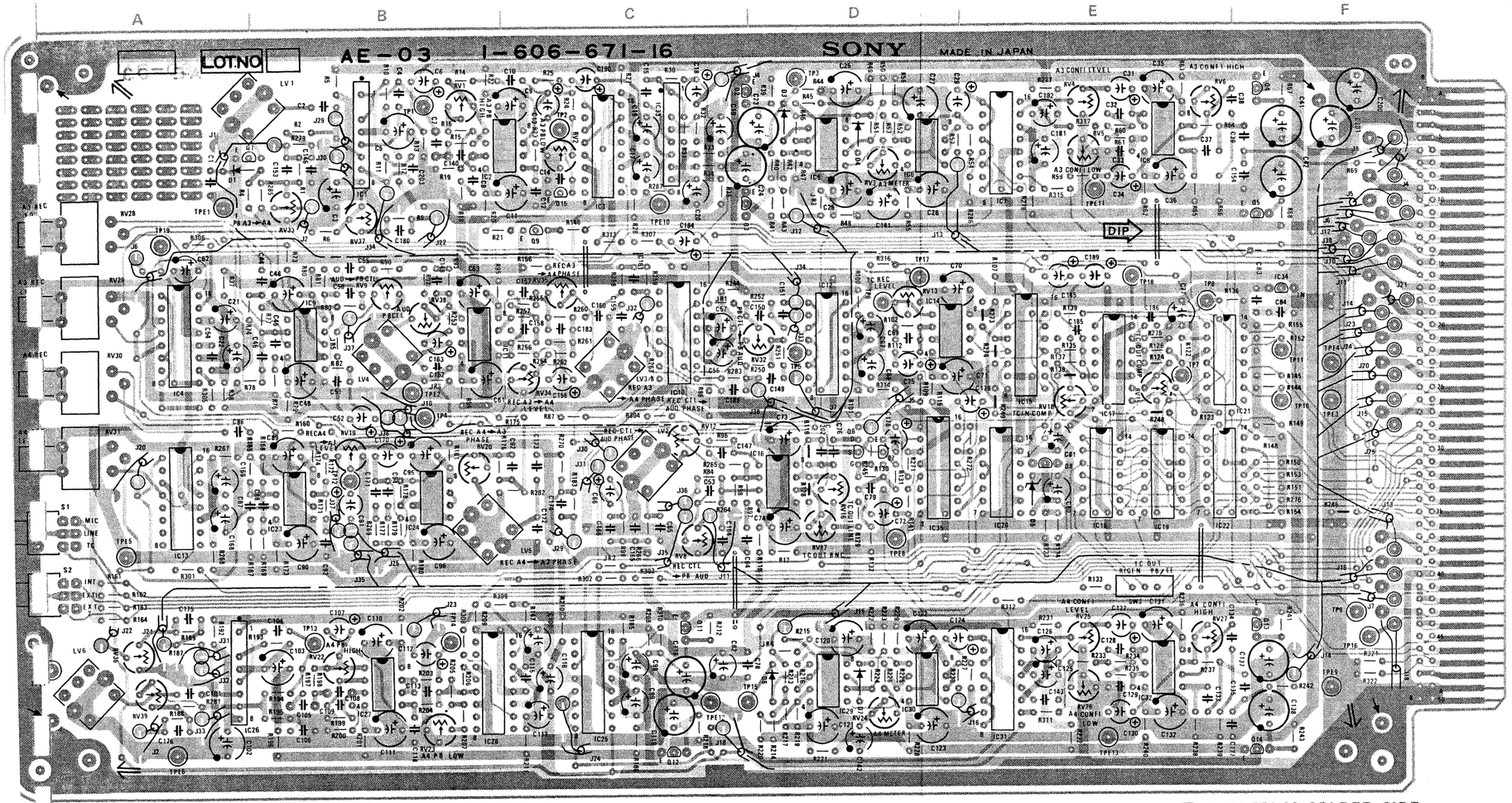

■ 1-606-671-16 COMPONENT SIDE

■ 1-606-671-16 SOLDER SIDE

C-15(3/13)

C-15(4/13)

AE-03 (1-606-671-16 & UP)

BVH-2000(J,U/C)	RV1	1B
	RV2	1C
BVH-2000PS	RV3	1D
(00/02 MODEL)	RV4	1E
	RV5	1E
BVH-2000PM	RV6	1E
BVH-2500(J,U/C)	RV8	3C
BVH-2500P	RV9	2B
	RV12	3C
D1 1A	RV13	2D
D3 1D	RV15	2E
D4 1D	RV16	3D
D5 3E	RV17	3D
	RV18	2E
IC1 1B	RV28	1A
IC2 1C	RV29	2A
IC3 1C	RV32	2D
IC4 2A		
IC5 1D	S1	3A
IC6 1D	S2	4A
IC7 1E	SW3	4E
IC8 1E		
IC9 2B	TP1	1B
IC10 2C	TP2	1C
IC11 2B	TP3	1D
IC12 2D	TP4	2B
IC14 2D	TP5	2D
IC15 2E	TP6	2D
IC16 3D	TP7	2E
IC17 2E	TP8	2E
IC18 3E	TP9	4F
IC19 3E	TP11	2F
IC21 2F	TP17	2D
IC22 3F	TP18	2E
IC33 1C	TP19	2A
IC34 2F		
	TPE1	1A
LV1 1B	TPE2	2B
LV2 3C	TPE4	2F
LV6 4A	TPE7	4A
	TPE8	3D
Q1 1B	TPE9	4F
Q2 1D	TPE10	1C
Q3 1D	TPE11	1E
Q4 1F		
Q5 1F		
Q6 3D		
Q7 3D		
Q8 3E		
Q9 1C		
Q15 1C		

AE-03 (1-606-671-16 & UP)

BVH-2000PS	RV1	1B
(04 MODEL)	RV2	1C
	RV3	1D
D1 1A	RV4	1E
D3 1D	RV5	1E
D4 1D	RV6	1E
D5 3E	RV8	3C
D6 4D	RV9	2B
D7 4D	RV12	3C
	RV13	2D
IC1 1B	RV15	2E
IC2 1C	RV16	3D
IC3 1C	RV17	3D
IC4 2A	RV18	2E
IC5 1D	RV19	3B
IC6 1D	RV20	3B
IC7 1E	RV22	4B
IC8 1E	RV23	4B
IC9 2B	RV24	4D
IC10 2C	RV25	4E
IC11 2B	RV26	4E
IC12 2D	RV27	4E
IC13 3A	RV28	1A
IC14 2D	RV29	2A
IC15 2E	RV30	2A
IC16 3D	RV31	3A
IC17 2E	RV32	2D
IC18 3E	RV33	1B
IC19 3E	RV34	2C
IC20 3E	RV35	2C
IC21 2F	RV36	4A
IC22 3F	RV37	1B
IC24 3B	RV38	2B
IC25 4C		
IC26 4A	S1	3A
IC27 4B	S2	4A
IC28 4B	SW3	4E
IC29 4D		
IC30 4D	TP1	1B
IC31 4E	TP2	1C
IC32 4E	TP3	1D
IC33 1C	TP4	2B
IC34 2F	TP5	2D
IC35 3D	TP6	2D
	TP7	2E
	TP8	2E
LV1 1B	TP9	4F
LV2 3C	TP10	2F
LV3 2C	TP11	2F
LV4 2B	TP12	3B
LV5 3B	TP13	4B
LV6 4A	TP14	4B
	TP15	4D
Q1 1B	TP16	4F
Q2 1D	TP17	2D
Q3 1D	TP18	2E
Q4 1F	TP19	2A
Q5 1F		
Q6 3D	TPE1	1A
Q7 3D	TPE2	2B
Q8 3E	TPE3	2F
Q9 1C	TPE4	2F
Q11 4C	TPE5	3A
Q12 4C	TPE6	4A
Q13 4F	TPE7	4A
Q14 4F	TPE8	3D
Q15 1C	TPE9	4F
	TPE10	1C
	TPE11	1E
	TPE12	4C
	TPE13	4E

AE-03 BOARD; FOR 00/02 MODELS

Audio-3 REC EQ/PB Amplifier

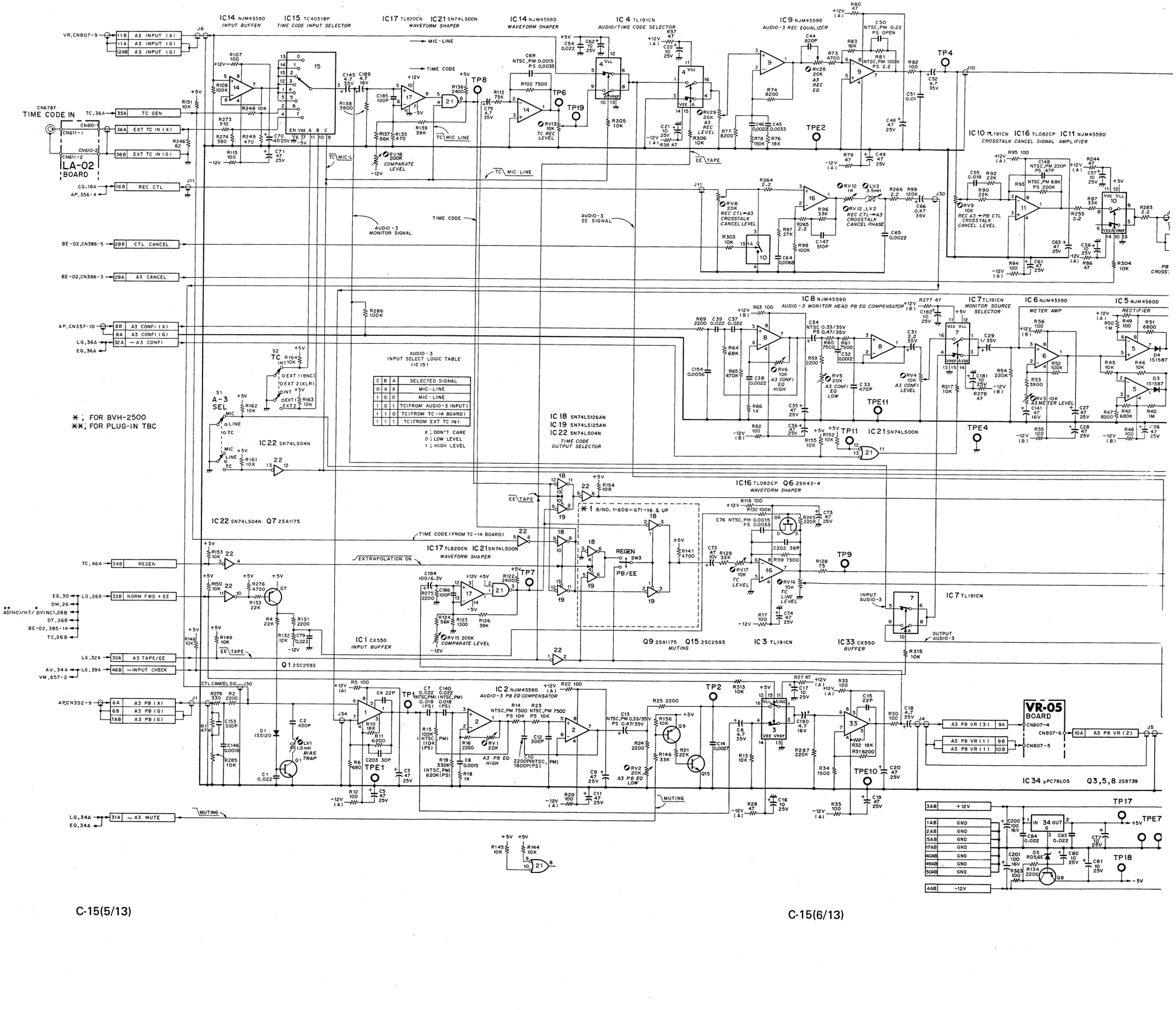

C-15(5/13)

C-15(6/13)

1-606-671-13 & UP CARD RACK AE-03 (FOR 00/02)

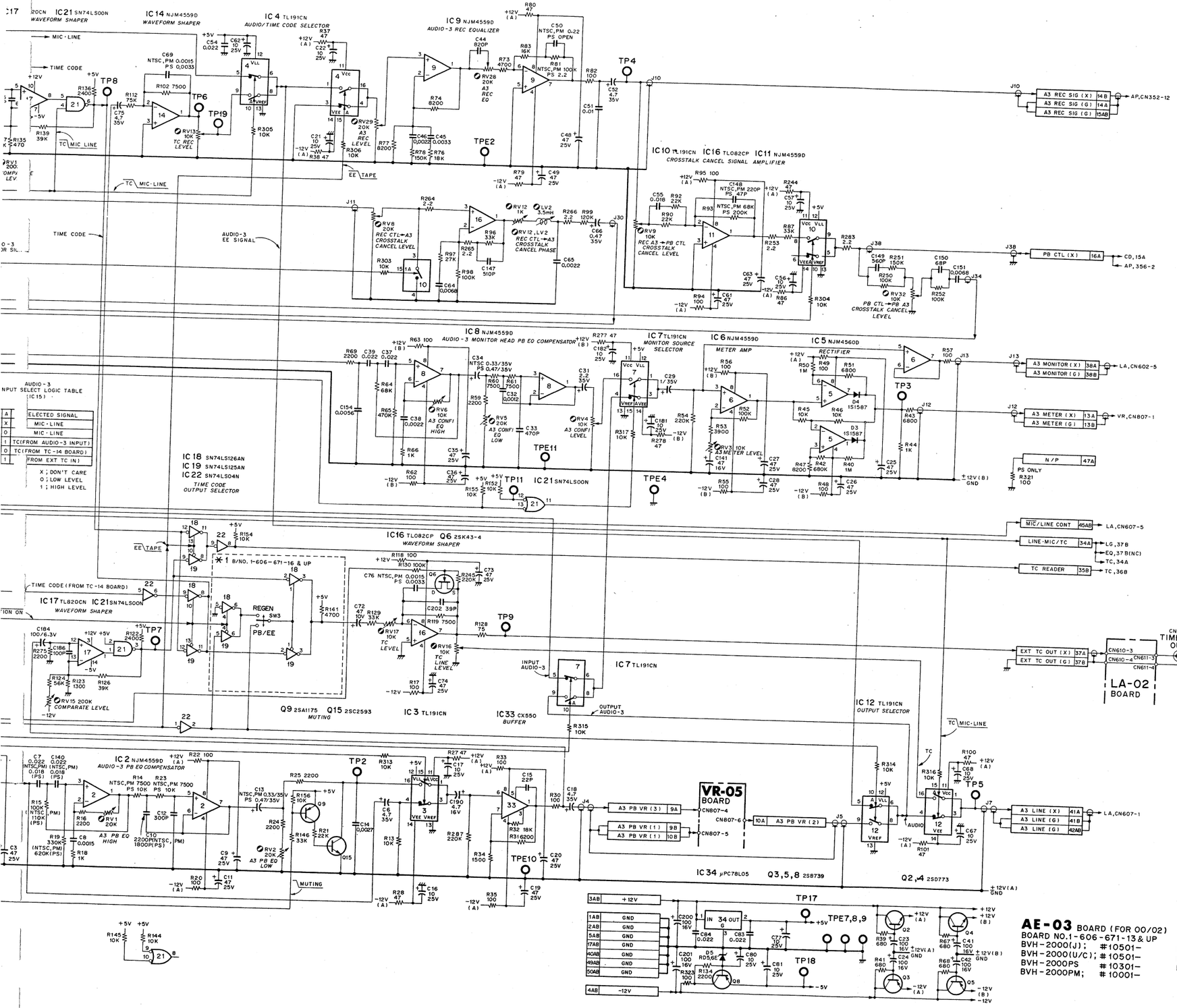

AE-03 BOARD (FOR 00/02)
BOARD NO.1-606-671-13 & UP

BVH-2000(J);	#10501-	BVH-2500(J);	#10001-
BVH-2000(U/C);	#10501-	BVH-2500(U/C);	#10001-
BVH-2000PS	#10301-	BVH-2500P;	#10001-
BVH-2000PM;	#10001-		

1-606-671-13 & UP
CARD RACK AE-03 (1/2) (FOR 04)
AE-

AE-03 BOARD (1/2); FOR 04 MODEL

Audio-3 REC EQ/PB Amplifier

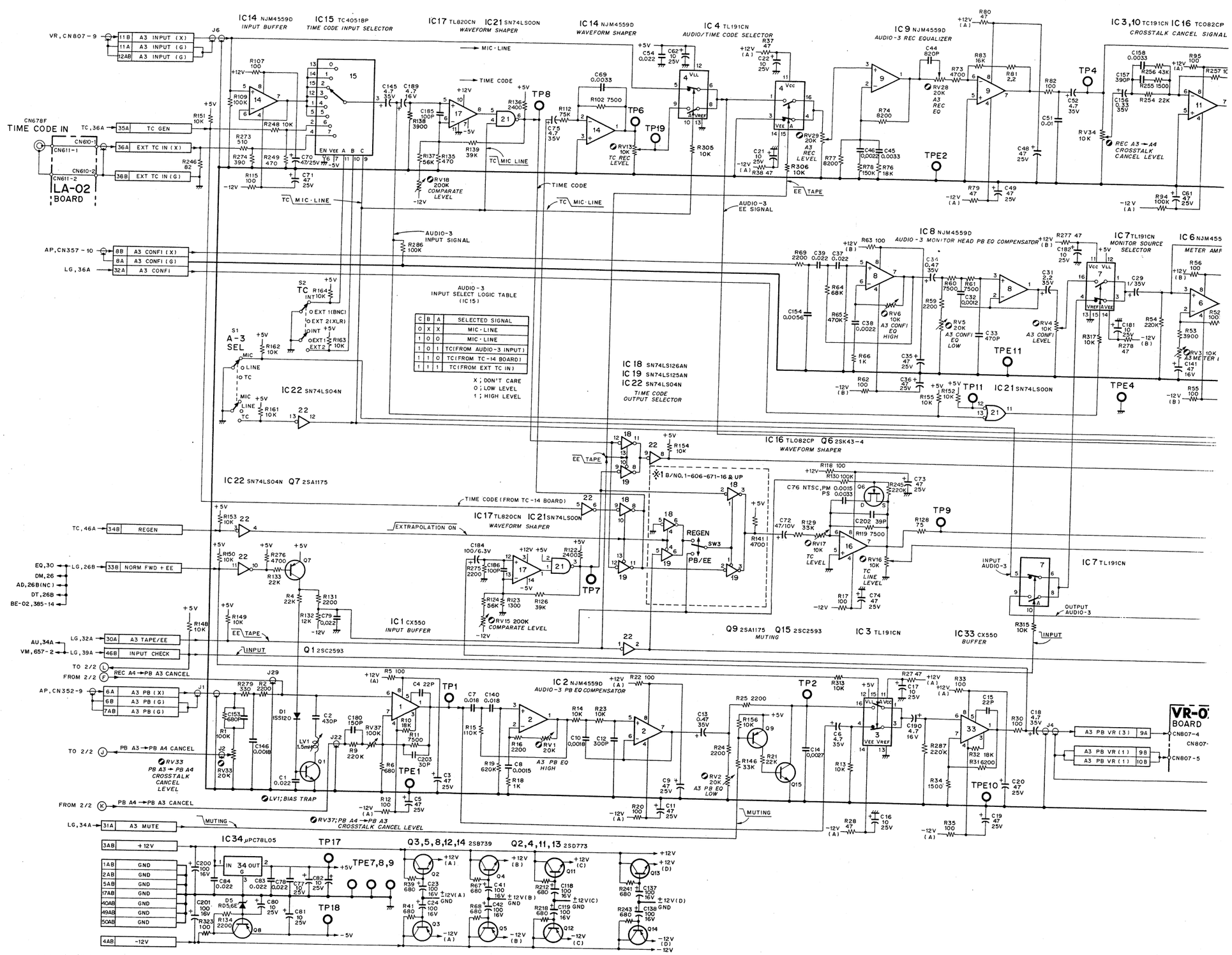

C-15(8/13)

C-15(9/13)

IC17 TL820CN IC21 SN74LS00N
WAVEFORM SHAPER

IC14 NJM4559D
WAVEFORM SHAPER

IC4 TL191CN
AUDIO/TIME CODE SELECTOR

IC9 NJM4559D
AUDIO-3 REC EQUALIZER

IC3,10 TC191CN IC16 TC082CP IC11 NJM4559D
CROSSTALK CANCEL SIGNAL AMPLIFIER

MIC·LINE
TIME CODE
TC MIC LINE
TC REC LEVEL
COMPARATE LEVEL
REC LEVEL
EE TAPE
REC A3→A4 CROSSTALK CANCEL LEVEL
REC A4→REC A3 CANCEL
REC A3→REC A4 CANCEL
REC A3→PB A4 CANCEL
A3 CANCEL
BE-02, CN386-3
AP, CN352-12
TO 2/2

AUDIO-3 INPUT SIGNAL

AUDIO-3 INPUT SELECT LOGIC TABLE (IC15)

C	B	A	SELECTED SIGNAL
0	X	X	MIC·LINE
	0	0	MIC·LINE
	0	1	TC(FROM AUDIO-3 INPUT)
	1	0	TC(FROM TC-14 BOARD)
	1	1	TC(FROM EXT TC IN)

X ; DON'T CARE
0 ; LOW LEVEL
1 ; HIGH LEVEL

IC8 NJM4559D
AUDIO-3 MONITOR HEAD PB EQ COMPENSATOR

IC7 TL191CN
MONITOR SOURCE SELECTOR

IC6 NJM4559D
METER AMP

IC5 NJM4560D
RECTIFIER

A3 MONITOR (X) 38A → LA, CN602-5
A3 MONITOR (G) 38B
A3 METER (X) 13A → VR, CN807-1
A3 METER (G) 13B
N/P 47A
02/04 47B
MIC/LINE CONT 45A → LA, CN607-5
LINE·MIC/TC 34A → LG, 37B
TC READER 35B → TC, 36B
±12V(B) GND

IC18 SN74LS126AN
IC19 SN74LS125AN
IC22 SN74LS04N
TIME CODE OUTPUT SELECTOR

IC16 TL082CP Q6 2SK43-4
WAVEFORM SHAPER

※1 B/NO. 1-606-671-16 & UP

TIME CODE (FROM TC-14 BOARD)
IC17 TL820CN IC21 SN74LS00N
WAVEFORM SHAPER
REGEN
SW3
PB/EE
TP7

EXT TC OUT (X) 37A
EXT TC OUT (G) 37B
CN687F TIME CODE OUT
LA-02 BOARD

※1 B/NO. 1-606-671-13

※1 B/NO. 1-606-671-14,15
JP1 REGEN
JP2 PB/EE

IC7 TL191CN
INPUT AUDIO-3
OUTPUT AUDIO-3
IC12 TL191CN
OUTPUT SELECTOR
INPUT
IC33 CX550
BUFFER

Q9 2SA1175 Q15 2SC2593
MUTING
IC3 TL191CN

IC2 NJM4559D
AUDIO-3 PB EQ COMPENSATOR
A3 PB EQ HIGH
A3 PB EQ LOW
MUTING

VR-07 BOARD
A3 PB VR (3) 9A
A3 PB VR (1) 9B
A3 PB VR (1) 10B
CN807-4
CN807-6
CN807-5
10A A3 PB VR (2)
J5

A3 LINE (X) 41A → LA, CN607-1
A3 LINE (G) 41B
A3 LINE (G) 42AB
±12V(A) GND

Q1,5,8,12,14 2SB739 Q2,4,11,13 2SD773
Q3,6,9,10 2SA1175 Q7,15,16 2SC2593

AE-03 BOARD **(1/2)** (FOR 04)
BOARD NO.1-606-671-13,14 & UP
BVH-2000PS ; # 10001-

AE-03 BOARD (2/2); FOR 04 MODEL

Audio-4 REC EQ/PB Amplifier

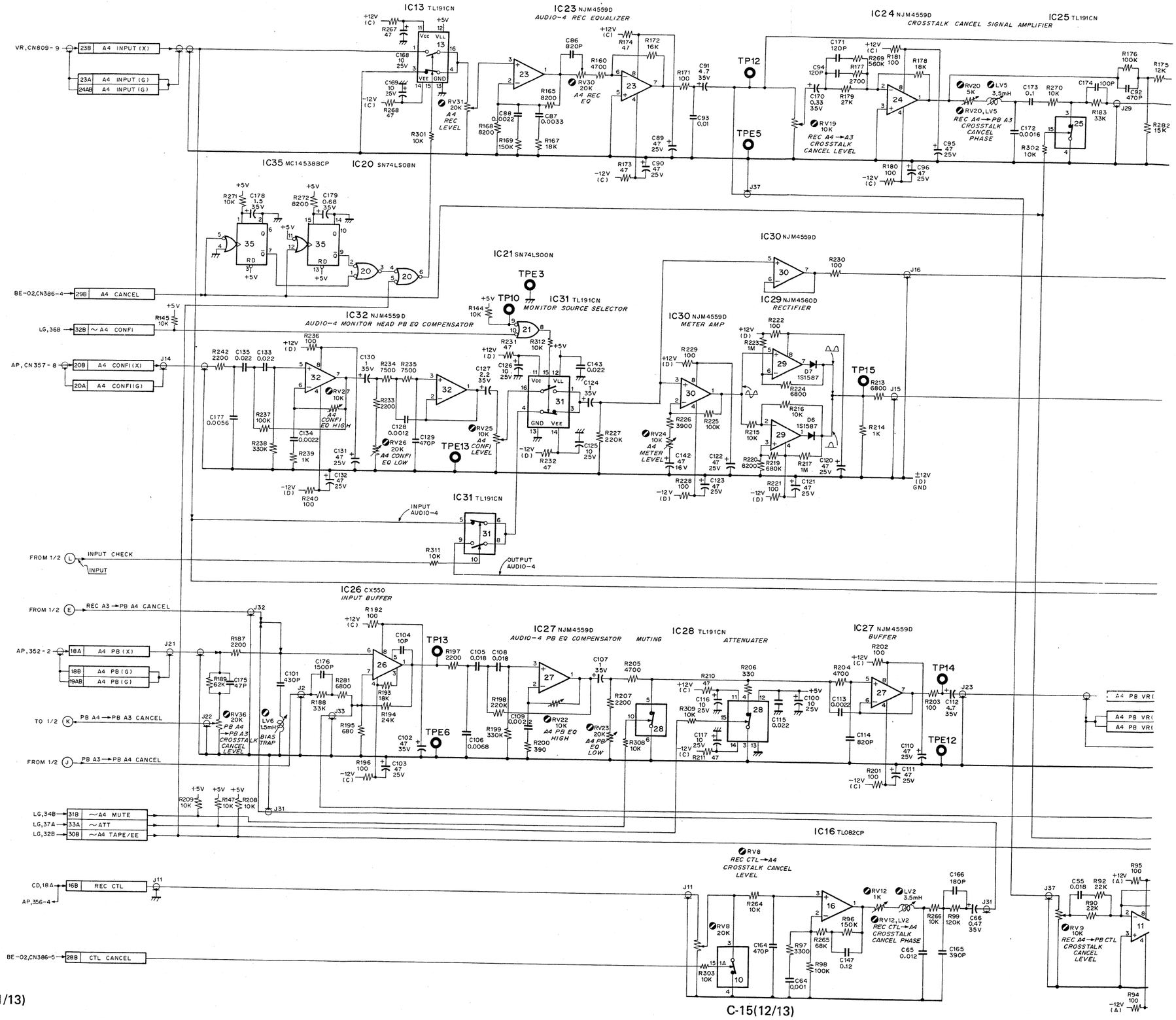

C-15(11/13)

C-15(12/13)

1-606-671-13 & UP CARD RACK AE-03 (2/2) (FOR 04)

IC13 TL191CN

IC23 NJM4559D
AUDIO-4 REC EQUALIZER

IC24 NJM4559D
CROSSTALK CANCEL SIGNAL AMPLIFIER

IC25 TL191CN

TP12

TPE5

RV31 20K A4 REC LEVEL

RV30 20K A4 REC EQ

RV19 10K REC A4 → A3 CROSSTALK CANCEL LEVEL

RV20 5K, LV5 3.5mH, RV20,LV5 REC A4 → PB A3 CROSSTALK CANCEL PHASE

J25
A4 REC SIG(X) 26B → AP,CN352-5
A4 REC SIG(G) 26A
A4 REC SIG(G) 27AB

REC A4 → REC A3 CANCEL (C) TO 1/2

REC A4 → PB A3 CANCEL (F) TO 1/2

(D) FROM 1/2

±12V (C) GND

C145388CP

IC20 SN74LS08N

IC30 NJM4559D

IC21 SN74LS00N

TPE3

IC29 NJM4560D
RECTIFIER

J16
A4 MONITOR(X) 39A → LA,CN602-7
A4 MONITOR(G) 39B

IC32 NJM4559D
DIO-4 MONITOR HEAD PB EQ COMPENSATOR

IC31 TL191CN
MONITOR SOURCE SELECTOR

IC30 NJM4559D
METER AMP

TP15

J15
A4 METER(X) 25A → VR,CN809-1
A4 METER(G) 25B

RV27 10K A4 CONFI EQ HIGH

RV26 20K A4 CONFI EQ LOW

RV25 10K A4 CONFI LEVEL

TPE13

RV24 10K A4 METER LEVEL

±12V (D) GND

IC31 TL191CN

INPUT AUDIO-4

OUTPUT AUDIO-4

IC25 TL191CN
AUDIO-4 OUTPUT SELECTOR

IC26 CX550
INPUT BUFFER

IC27 NJM4559D
AUDIO-4 PB EQ COMPENSATOR

IC28 TL191CN
MUTING ATTENUATER

IC27 NJM4559D
BUFFER

TP13

TP14

TP16

TPE6

TPE12

RV22 10K A4 PB EQ HIGH

RV23 20K A4 PB EQ LOW

VR-07 BOARD
A4 PB VR(3) 21A → CN809-4
A4 PB VR(1) 21B → CN809-5
A4 PB VR(1) 22B
22A A4 PB VR(2) → J24

J18
A4 OUTPUT(X) 43A → LA,CN607-3
A4 OUTPUT(G) 43B
A4 OUTPUT(G) 44AB

AE-03 BOARD (2/2) (FOR 04)
BOARD NO. 1-606-671-13,14 & UP
BVH-2000PS; # 10001-

IC16 TL082CP

RV8 REC CTL → A4 CROSSTALK CANCEL LEVEL

RV12,LV2 REC CTL → A4 CROSSTALK CANCEL PHASE

J11

J31

C-15(12/13)

RV38 REC A4 → PB CTL CROSSTALK CANCEL LEVEL

RV9 10K REC A4 → PB CTL CROSSTALK CANCEL LEVEL

RV38 1K, LV4 3.5mH CROSSTALK CANCEL PHASE

IC11 NJM4559D

IC10 TL191CN

IC16 TL082CP
CROSSTALK CANCEL

PB CTL 16A → CD,15A
→ AP,356-2

RV32 10K PB CTL → PB A4 CROSSTALK LEVEL

C-15(13/13)

EQ-02 BOARD (1-606-659-11)

Component Side

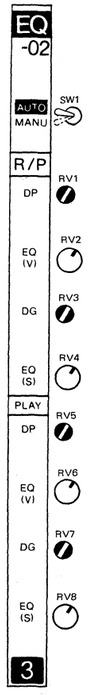

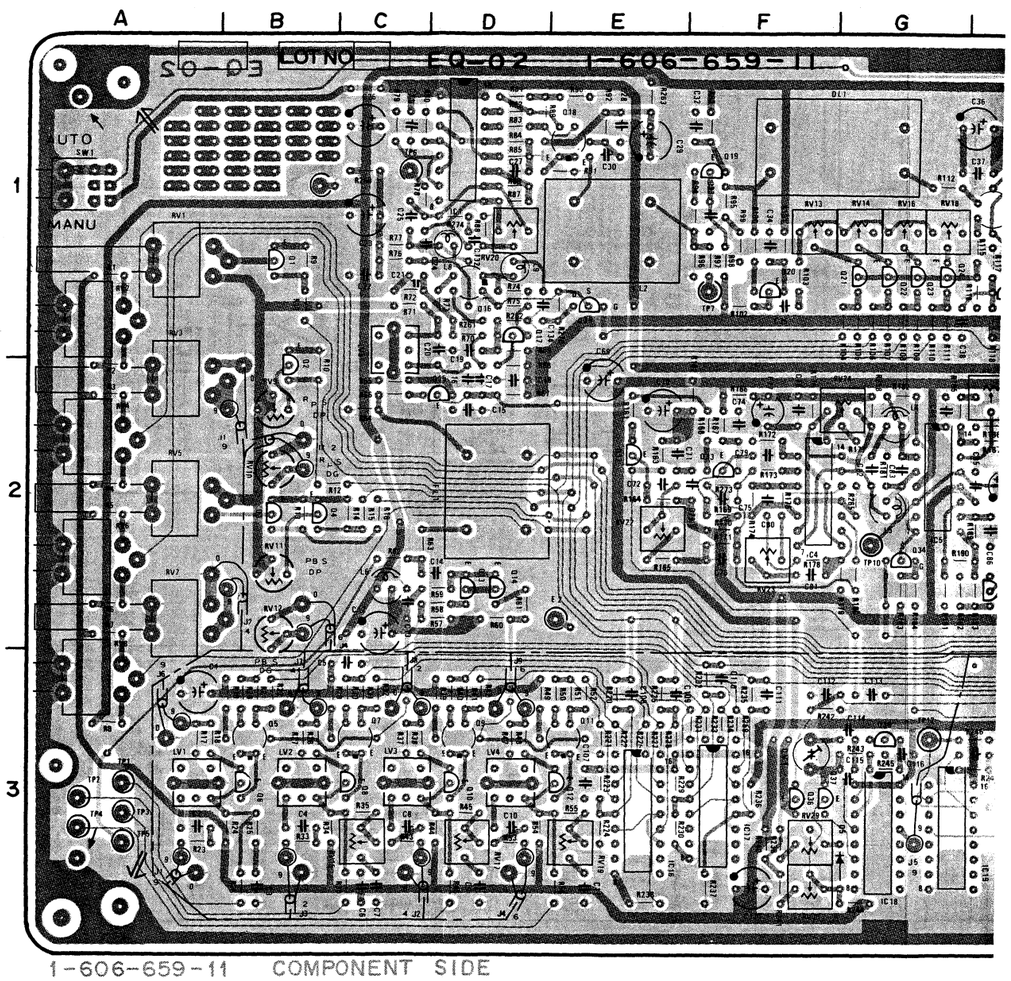

1-606-659-11 COMPONENT SIDE

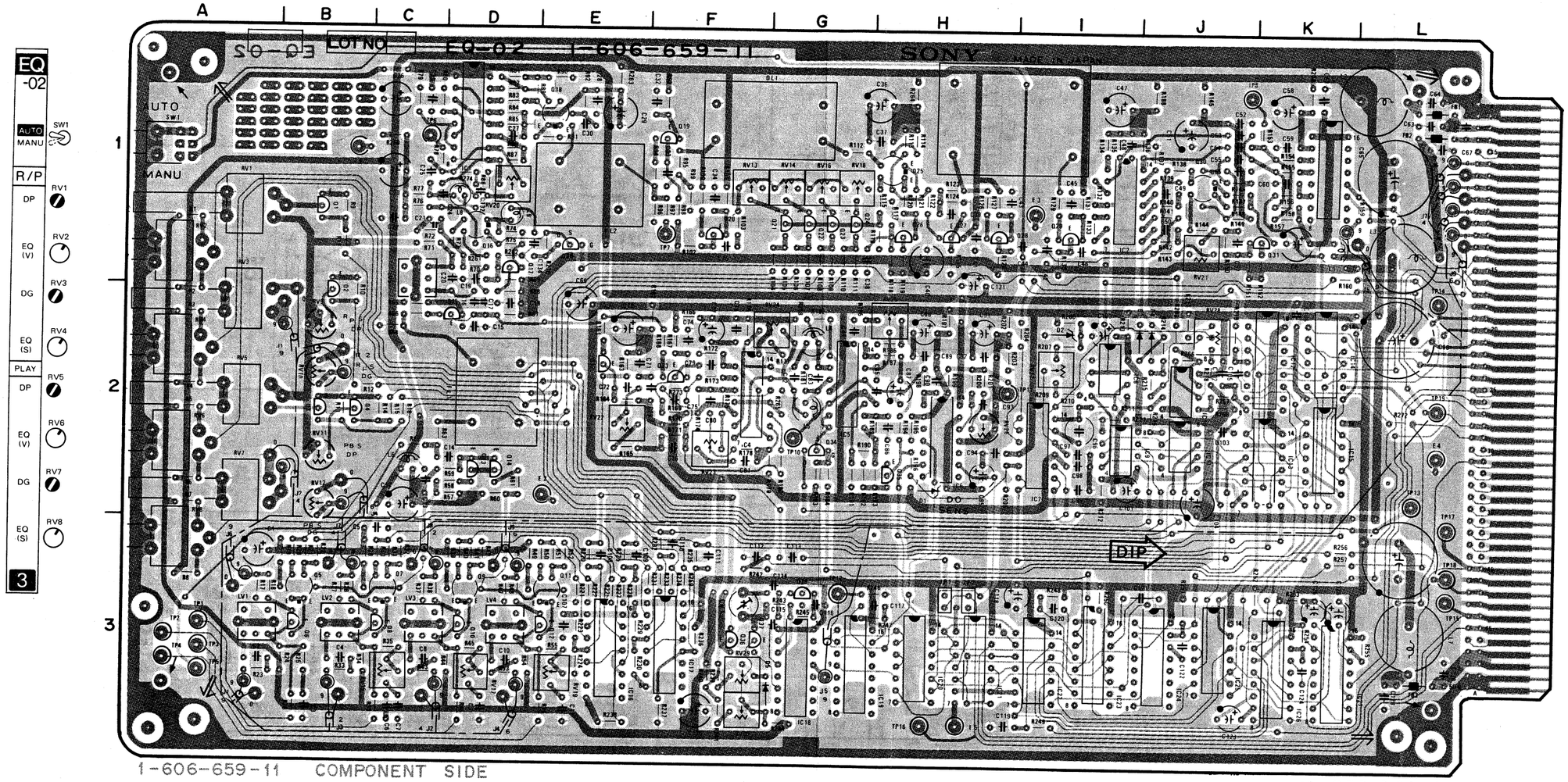

EQ-02 (1-606-659-11)

BVH-2000(J,U/C)		Q25	1H		
BVH-2000PS		Q26	1H		
BVH-2000PM		Q27	1H		
		Q28	1H		
CV1	3F	Q29	1I		
		Q30	1J		
D1	2H	Q31	1K		
D2	2I	Q32	2E		
D3	2J	Q33	2F		
D4	2J	Q34	2G		
		Q35	2H		
DL1	1G	Q36	3F		
DL2	1H	Q37	3F		
		Q38	3G		
IC1	1D	Q39	1E		
IC2	1I				
IC3	1K	RV1	1A		
IC4	2F	RV2	1A		
IC5	2F	RV3	2A		
IC6	2H	RV4	2A		
IC7	2I	RV5	2A		
IC8	2I	RV6	2A		
IC9	2I	RV7	2A		
IC10	2J	RV8	3A		
IC11	2J	RV9	2B		
IC12	2K	RV10	2B		
IC13	2K	RV11	2B		
IC14	2K	RV12	2B		
IC15	2K	RV13	1F		
IC16	3E	RV14	1G		
IC17	3F	RV15	3G		
IC18	3G	RV16	1G		
IC19	3G	RV17	3D		
IC20	3H	RV18	1G		
IC21	3H	RV19	3E		
IC22	3I	RV20	1D		
IC23	3I	RV21	1J		
IC24	3J	RV22	2E		
IC25	3J	RV23	2E		
IC26	3K	RV24	2G		
IC27	3K	RV25	2H		
IC28	1B	RV26	2H		
		RV27	2I		
JP1	3H	RV28	2J		
JP2	3H	RV30	3F		
		RV31	3B		
LV1	3A	RV32	3C		
LV2	3B	RV33	3D		
LV3	3C				
LV4	3D	SW1	1A		
LV5	1C				
		TP1	3A		
Q1	1B	TP2	3A		
Q2	2B	TP3	3A		
Q3	2B	TP4	3A		
Q4	2B	TP5	3A		
Q5	3B	TP6	1C		
Q6	3B	TP7	1E		
Q7	3C	TP8	1J		
Q8	3C	TP10	2G		
Q9	3D	TP11	2H		
Q10	3D	TP12	3G		
Q11	3E	TP13	2L		
Q12	3E	TP14	2L		
Q13	2D	TP15	3L		
Q14	2D	TP16	3H		
Q15	2D	TP17	2L		
Q16	1D	TP18	3L		
Q17	1D	TP19	2L		
Q18	1E				
Q19	1F	TPE1	1B		
Q20	1F	TPE2	2E		
Q21	1G	TPE3	1I		
Q22	1G	TPE4	2L		
Q23	1G	TPE5	3H		
Q24	1G				

EQ-02 BOARD

Video/Sync PB Equalizer

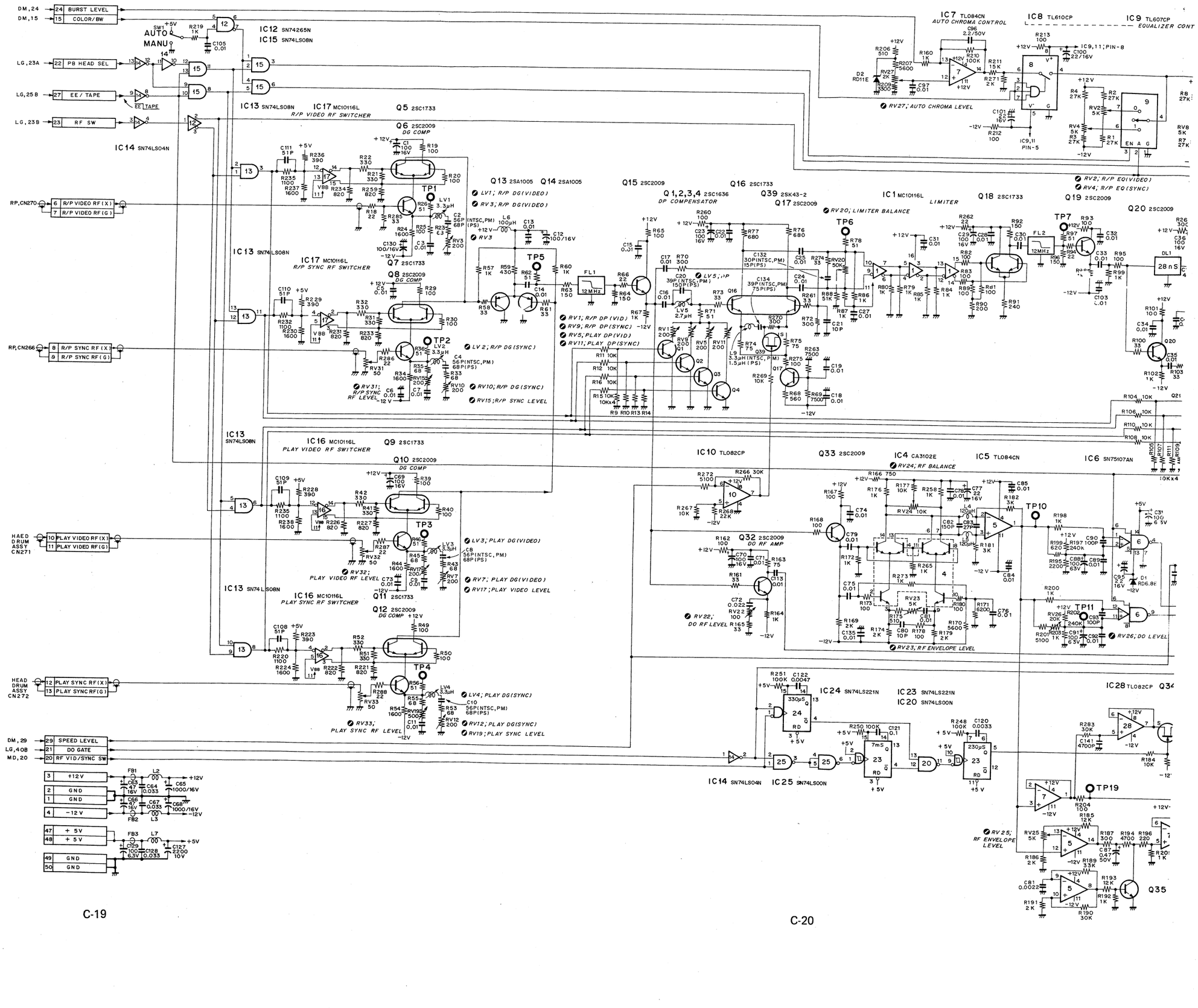

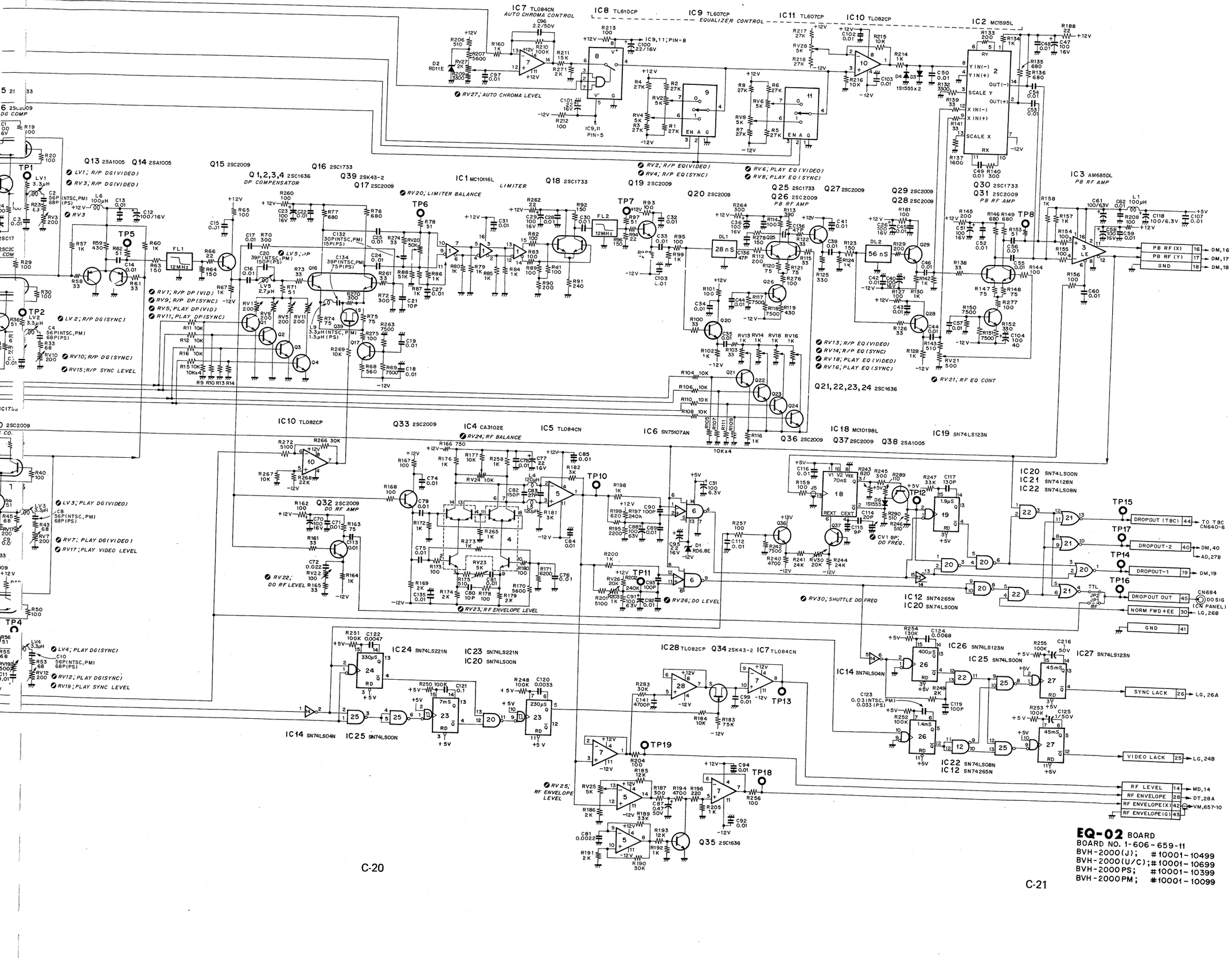

EQ-02 BOARD
BOARD NO. 1-606-659-11
BVH-2000(J); #10001-10499
BVH-2000(U/C); #10001-10699
BVH-2000PS; #10001-10399
BVH-2000PM; #10001-10099

EQ-02 BOARD (1-606-659-14)

Component Side

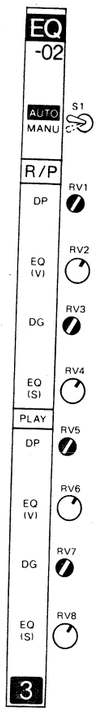

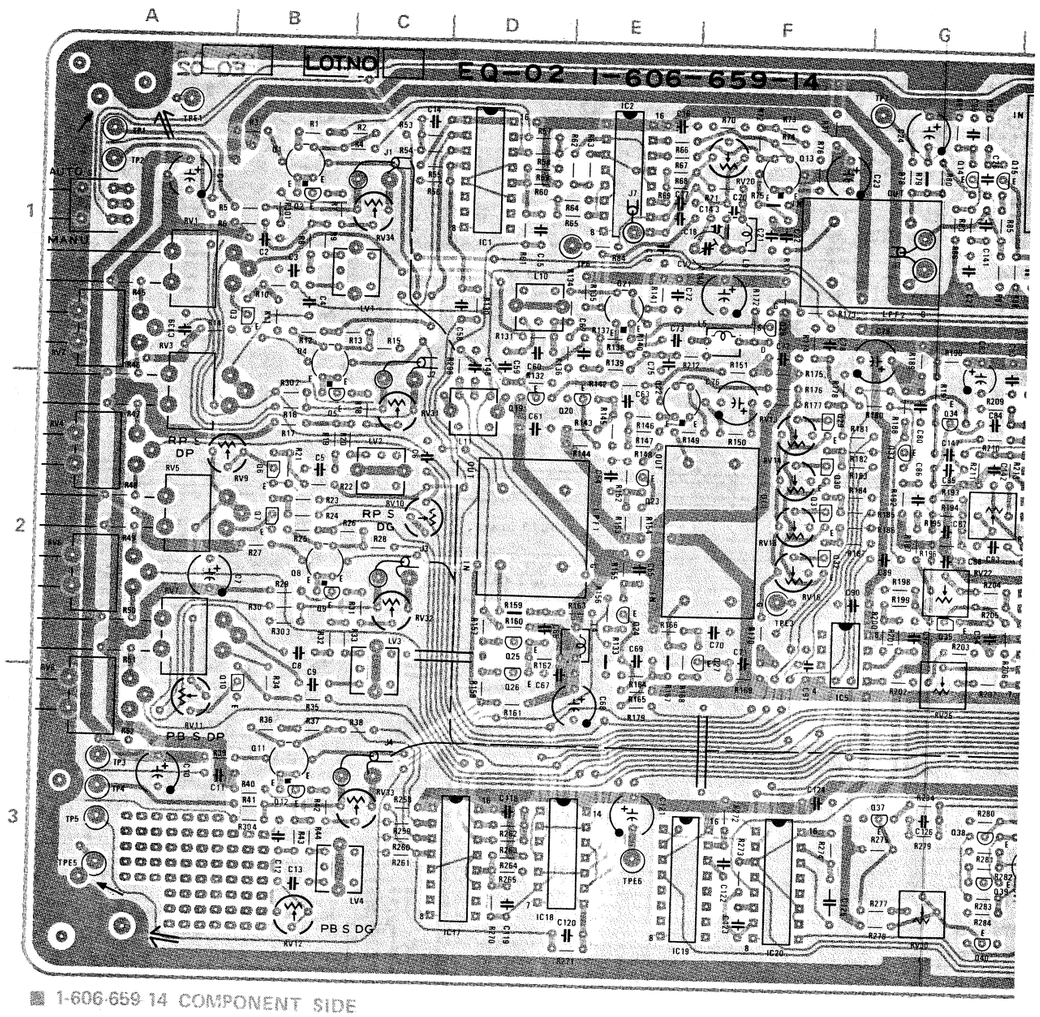

1-606-659-14 COMPONENT SIDE

14)

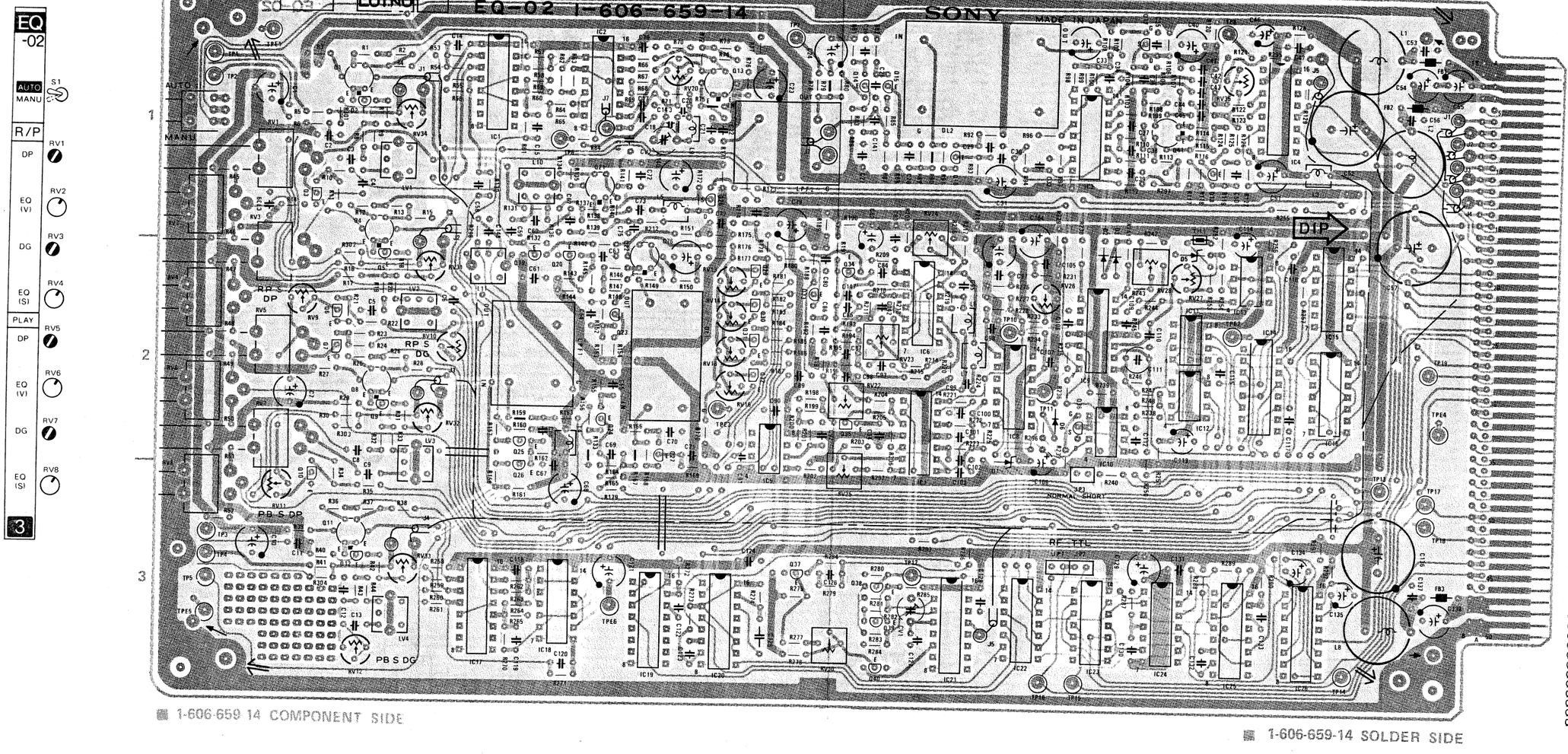

■ 1-606-659 14 COMPONENT SIDE

■ 1-606-659-14 SOLDER SIDE

EQ-02 (1-606-659-14)

BVH-2000PS

CV1	3H		Q28	1F			
CV2	1E		Q29	2F			
			Q30	2F			
D1	2H		Q31	2F			
D2	2J		Q32	2F			
D3	2J		Q33	2G			
D5	2K		Q34	2G			
D6	2J		Q35	2G			
			Q36	2J			
DL1	2F		Q37	3G			
DL2	1H		Q38	3G			
			Q39	3G			
IC1	1D		Q40	3G			
IC2	1E		Q41	1K			
IC3	1J						
IC4	1L		RV1	1A			
IC5	2F		RV2	1A			
IC6	2H		RV3	2A			
IC7	2H		RV4	2A			
IC8	2H		RV5	2A			
IC9	2J		RV6	2A			
IC10	2J		RV7	2A			
IC11	2K		RV8	3A			
IC12	2K		RV9	2A			
IC13	2K		RV10	2C			
IC14	2L		RV11	3A			
IC15	2L		RV12	3B			
IC16	2L		RV13	2P			
IC17	3D		RV14	2P			
IC18	3D		RV16	2P			
IC19	3E		RV18	2P			
IC20	3F		RV20	1P			
IC21	3H		RV22	2G			
IC22	3H		RV23	2G			
IC23	3J		RV24	1H			
IC24	3K		RV25	2G			
IC25	3K		RV26	2J			
IC26	3L		RV27	2K			
			RV28	2K			
JP1	3J		RV30	3G			
JP2	3J		RV31	2C			
JP3	2J		RV32	2C			
			RV33	3C			
LV1	1C		RV34	1C			
LV2	2C		RV35	1K			
LV3	2C						
LV4	3C		S1	1A			
Q1	1B		TH1	1K			
Q2	1B						
Q3	1B		TP1	1A			
Q4	1B		TP2	1A			
Q5	2B		TP3	3A			
Q6	2B		TP4	3A			
Q7	2B		TP5	3A			
Q8	2B		TP6	1D			
Q9	2B		TP7	1G			
Q10	3B		TP8	1K			
Q11	3B		TP10	2H			
Q12	3B		TP11	2J			
Q13	1F		TP12	3H			
Q14	1G		TP13	3M			
Q15	1G		TP14	3L			
Q16	1H		TP15	3J			
Q17	1J		TP16	3J			
Q18	1K		TP17	3M			
Q19	2D		TP18	3M			
Q20	2E		TP19	2M			
Q21	1E						
Q22	2E		TPE1	1A			
Q23	2E		TPE2	2K			
Q24	2E		TPE3	2F			
Q25	2D		TPE4	2M			
Q26	2D		TPE5	3A			
Q27	2E		TPE6	3E			

EQ-02 BOARD

Video/Sync PB Equalizer

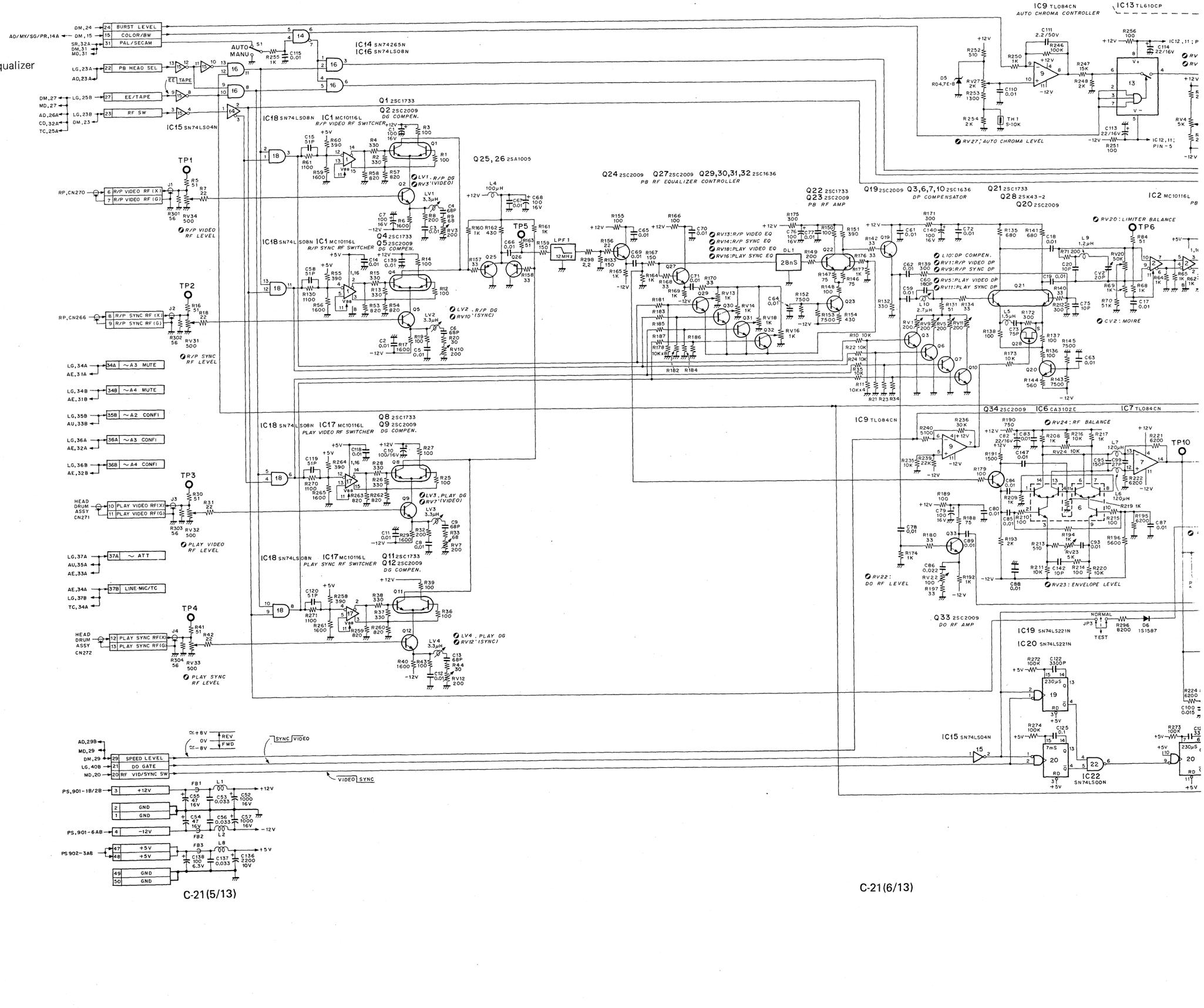

C-21(5/13)

C-21(6/13)

#10401 – 12299 1-606-659-12, 13, 14 CARD RACK **EQ-02**

IC9 TL084CN AUTO CHROMA CONTROLLER — IC13 TL610CP — IC12 TL607CP — EQ CONTROLLER — IC11 TL607CP — IC9 TL084CN — IC3 MC1595L

RV27: AUTO CHROMA LEVEL — RV4: R/P SYNC EQ — RV2: R/P VIDEO EQ — RV8: PLAY SYNC EQ — RV6: PLAY VIDEO EQ — RV28: EQ CONT

Q25, 26 2SA1005 — Q24 2SC2009 Q27 2SC2009 Q29,30,31,32 2SC1636 PB RF EQUALIZER CONTROLLER — Q22 2SC1733 Q23 2SC2009 PB RF AMP — Q19 2SC2009 Q3,6,7,10 2SC1636 DP COMPENSATOR — Q21 2SC1733 Q28 2SK43-2 Q20 2SC2009 — IC2 MC10116L PB RF LIMITER — Q13 2SC1733 — Q14 2SC2009 Q15 2SC2009 — Q17 2SK43-3 Q16 2SC2009 Q41 2SC1733 Q18 2SC2009 — IC4 AM685DL PB RF LIMITER

RV13: R/P VIDEO EQ — RV14: R/P SYNC EQ — RV18: PLAY VIDEO EQ — RV16: PLAY SYNC EQ — RV20: LIMITER BALANCE — L10: DP COMPEN. — RV1: R/P VIDEO DP — RV9: R/P SYNC DP — RV5: PLAY VIDEO DP — RV11: PLAY SYNC DP — CV2: MOIRE — RV35: MOIRE

IC9 TL084CN — Q34 2SC2009 — IC6 CA3102E — IC7 TL084CN — IC8 SN75107AN Q37,040 2SC2009 — IC21 MC10198L — Q38,39 2SA1005

RV24: RF BALANCE — RV22: DO RF LEVEL — RV23: ENVELOPE LEVEL — RV26: DO LEVEL — RV30: SHUTTLE DO FREQ — CV1: DO FREQ — RV25: RF ENVELO LEVEL

Q33 2SC2009 DO RF AMP — Q36 2SK43-2 — Q35 2SC1636

IC19 SN74LS221N — IC20 SN74LS221N — IC15 SN74LS04N — IC22 SN74LS00N — IC5 TL082CP — IC7 TL084CN — IC14 SN74265N — IC9 TL084CN — IC10 TL082CP — IC7 TL084CN — IC24 SN74LS00N — IC25 SN74LS123N — IC23 SN74128N — IC22 SN74LS00N — IC25 SN74LS123N — IC24 SN74LS00N — IC26 SN74LS123N — IC14 SN74265N

TP5 TP6 TP7 TP8 TP10 TP11 TP12 TP13 TP14 TP15 TP16 TP17 TP18 TP19

PB RF (X)	16 → DM,16
PB RF (Y)	17 → DM,17
GND	18 → DM,18
DROPOUT (TBC)	44 → TO TBC CN640-6
DROPOUT-1	19 → DM,19
DROPOUT-2	40 → DM,40 / AD,27B
DO SIG OUT	45 → CN684 DO SIG (CN PANEL)
NORM FWD+EE	30 → LG,26B / AE,33B / DM,26 / AD,26B / DT,26B / BE-02,385-14 / TC,26B
SYNC LACK	26 → LG,26A
VIDEO LACK	25 → LG,24B
RF ENVELOPE	28 → DT,28A
RF LEVEL	14 → MD,14
RF ENVELOPE(X)	42
RF ENVELOPE(G)	43 → VM,657-10

EQ-02 BOARD
BOARD NO. 1-606-659-12,13,14
BVH-2000PS(AEP);#10401-12299

1-606-659-14

2000(J); #11701 –
2000(U/C); #11801 –
2000PS; #22301 –
2000PM; #20201 –
2500(J); #10001 –
2500(U/C); #10001 –

EQ-02 BOARD (1-606-659-14)

Component Side

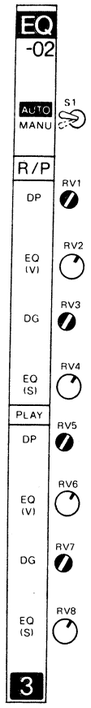

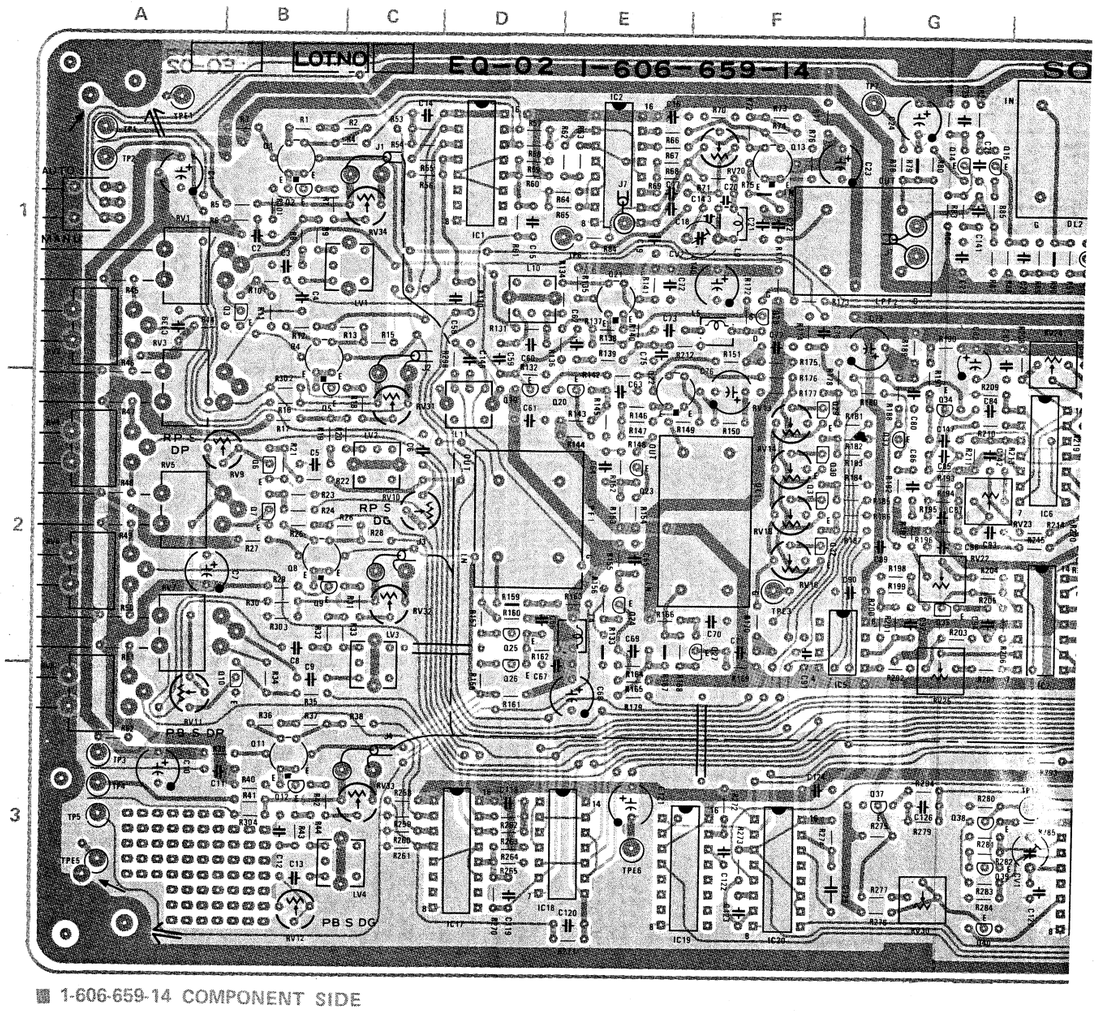

■ 1-606-659-14 COMPONENT SIDE

SW-81 BOARD (1-612-751-11)

Solder Side

For PS

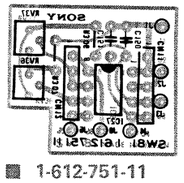

■ 1-612-751-11
SOLDER SIDE

2000(J); #11701 –
2000(U/C); #11801 –
2000PS; #22301 –
2000PM; #20201 –
2500(J); #10001 –
2500(U/C); #10001 –

1-606-659-14

2000(J); #11701 –
2000(U/C); #11801 –
2000PS; #22301 –
2000PM; #20201 –
2500(J); #10001 –
2500(U/C); #10001 –

1-606-659-14

CARD RACK **EQ-02**

EQ-02 CARD RACK

1-606-659-14

2000(J); #11701 –
2000(U/C); #11801 –
2000PS; #22301 –
2000PM; #20201 –
2500(J); #10001 –
2500(U/C); #10001 –

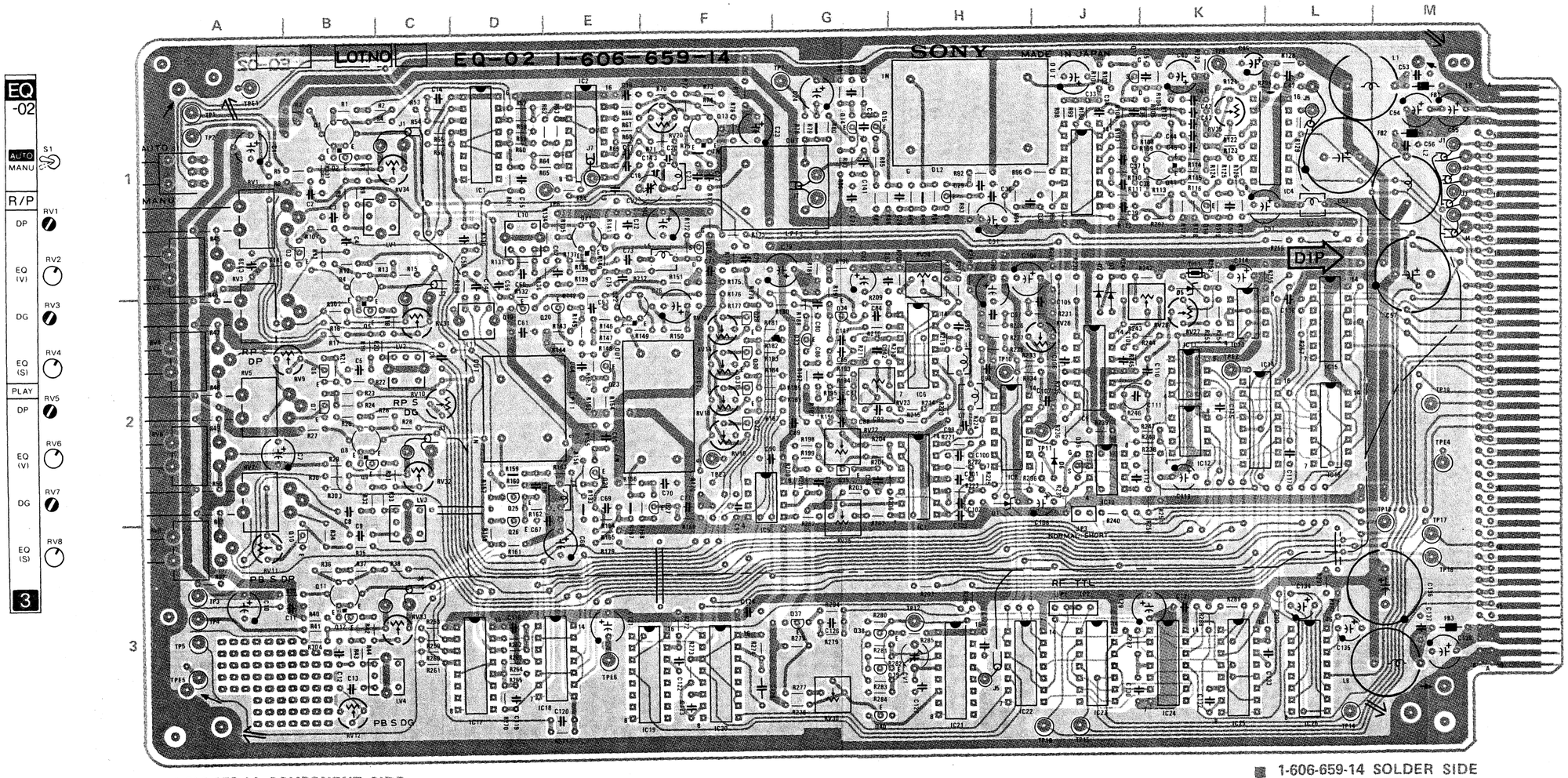

■ 1-606-659-14 COMPONENT SIDE

■ 1-606-659-14 SOLDER SIDE

EQ-02 (1-606-659-14 & UP)

BVH-2000(J,U/C)
BVH-2000PS
BVH-2000PM
BVH-2500(J,U/C)

CV1	3H	Q30	2F
		Q31	2F
(NTSC,PM)		Q32	2F
CV2	1E	Q33	2G
		Q34	2G
D1	2H	Q35	2G
D2	2J	Q36	2J
D3	2J	Q37	3G
D5	2K	Q38	3G
D6	2J	Q39	3G
		Q40	3G
DL1	2F	Q41	1K
DL2	1H		
		RV1	1A
IC1	1D	RV2	1A
IC3	1J	RV3	2A
IC4	1L	RV4	2A
IC5	2F	RV5	2A
IC6	2H	RV6	2A
IC7	2H	RV7	2A
IC8	2H	RV8	3A
IC9	2J	RV9	2A
IC10	2J	RV10	2C
IC11	2K	RV11	3A
IC12	2K	RV12	3B
IC13	2K	RV13	2F
IC14	2L	RV14	2F
IC15	2L	RV16	2F
IC16	2L	RV18	2F
IC17	3D	RV22	2G
IC18	3D	RV23	2G
IC19	3E	RV24	1H
IC20	3F	RV25	2G
IC21	3H	RV26	2J
IC22	3H	RV27	2K
IC23	3J	RV28	2K
IC24	3K	RV30	3G
IC25	3K	RV31	2C
IC26	3L	RV32	2C
		RV33	3C
(SW-81 BOARD)		RV34	1C
IC27	3B	RV35	1K
JP1	3J	(SW-81 BOARD)	
JP2	3J	RV36	3A
JP3	2J	RV37	3A
LV1	1C	S1	1A
LV2	2C		
LV3	2C	TH1	1K
LV4	3C		
		TP1	1A
Q1	1B	TP2	1A
Q2	1B	TP3	3A
Q3	1B	TP4	3A
Q4	1B	TP5	3A
Q5	2B		
Q6	2B	(NTSC,PM)	
Q7	2B	TP6	1D
Q8	2B		
Q9	2B	TP8	1K
Q10	3B	TP10	2H
Q11	3B	TP11	2J
Q12	3B	TP12	3H
Q15	1G	TP13	3M
Q16	1H	TP14	3L
Q17	1J	TP15	3J
Q18	1K	TP16	3J
Q19	2D	TP17	3M
Q20	2E	TP18	3M
Q21	1E	TP19	2M
Q22	2E		
Q23	2E	TPE1	1A
Q24	2E	TPE2	2K
Q25	2D	TPE3	2F
Q26	2D	TPE4	2M
Q27	2E	TPE5	3A
Q28	1F	TPE6	3E
Q29	2F		

12-751-11)

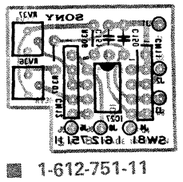

■ 1-612-751-11
SOLDER SIDE

EQ-02 BOARD

Video/Sync PB Equalizer

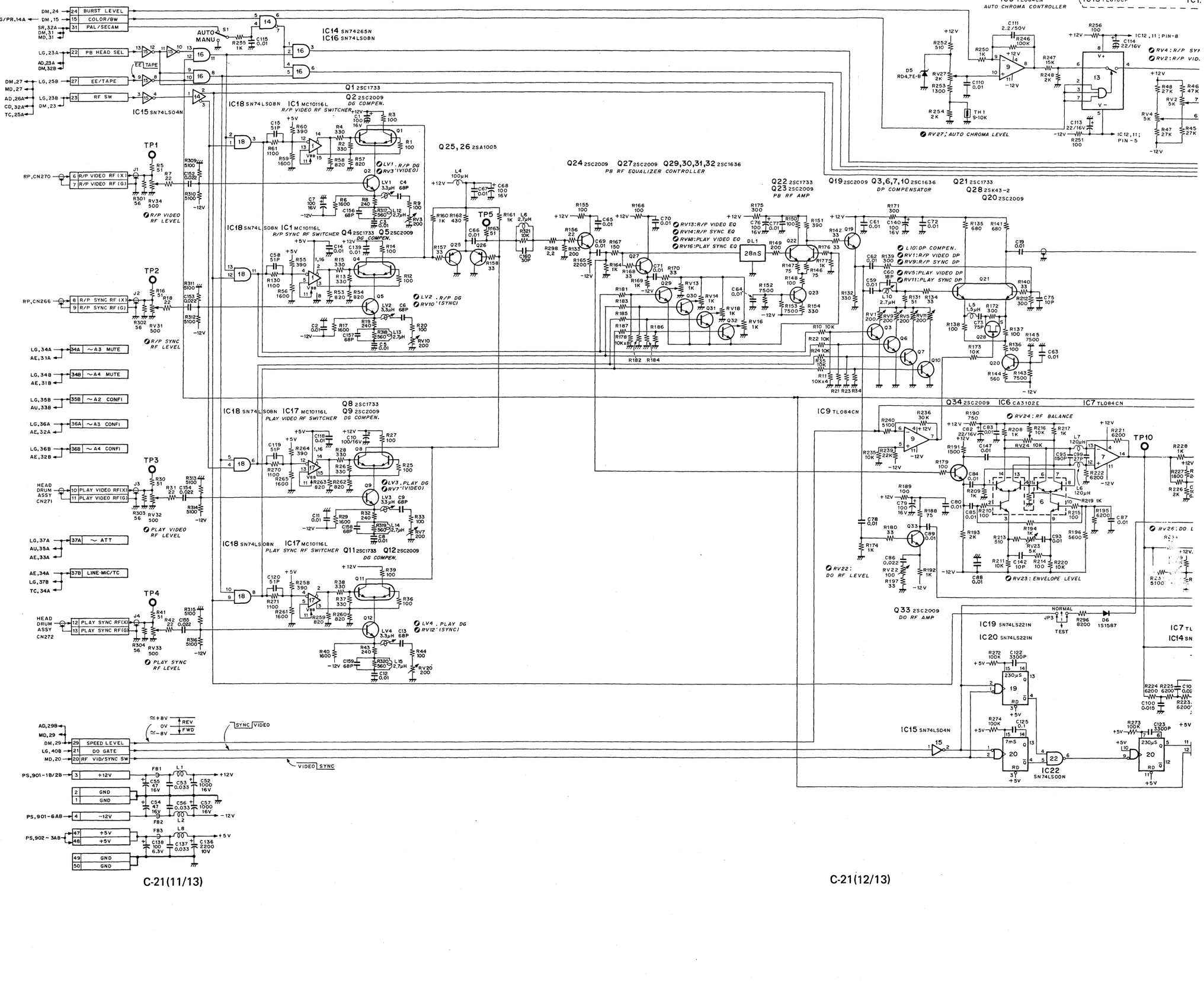

C-21(11/13)

C-21(12/13)

IC9 TL084CN AUTO CHROMA CONTROLLER
IC13 TL610CP
IC12 TL607CP
IC11 TL607CP
IC9 TL084CN
IC3 MC1595L
EQ CONTROLLER
RV27: AUTO CHROMA LEVEL
RV4: R/P SYNC EQ
RV2: R/P VIDEO EQ
RV28: EQ CONT
RV8: PLAY SYNC EQ
RV6: PLAY VIDEO EQ
IC12,11; PIN-8
IC12,11; PIN-5
TH1 S-10K
1S1555x2
SCALE Y
SCALE X
Y IN(-)
Y IN(+)
X IN(-)
X IN(+)
OUT(-)
OUT(+)
RY
RX
IC4 AM685DL PB RF LIMITER
Q24 2SC2009 Q27 2SC2009 Q29,30,31,32 2SC1636
PB RF EQUALIZER CONTROLLER
Q22 2SC1733 Q23 2SC2009
PB RF AMP
Q19 2SC2009 Q3,6,7,10 2SC1636
DP COMPENSATOR
Q21 2SC1733 Q28 2SK43-2 Q20 2SC2009
Q15 2SC2009
Q17 2SK43-3 Q16 2SC2009
Q41 2SC1733 Q18 2SC2009
RV13:R/P VIDEO EQ
RV14:R/P SYNC EQ
RV16:PLAY VIDEO EQ
RV15:PLAY SYNC EQ
L10:DP COMPEN.
RV1:R/P VIDEO DP
RV9:R/P SYNC DP
RV5:PLAY VIDEO DP
RV11:PLAY SYNC DP
RV35 MOIRÉ
28nS
56nS
DL1
DL2
TP5
TP8
IC9 TL084CN
IC7 TL084CN
IC6 CA3102E
Q34 2SC2009
RV24: RF BALANCE
IC8 SN75107AN Q37,40 2SC2009
IC21 MC10198L
Q38,39 2SA1005
IC27 TL601CP
RV36; PLAY HEAD MOIRÉ
RV37; R/P HEAD MOIRÉ
TP10
TP11
TP12
IC24 SN74LS00N
IC25 SN74LS123N
IC23 SN74128N
RV22: DO RF LEVEL
RV23: ENVELOPE LEVEL
RV26: DO LEVEL
RV30: SHUTTLE DO FREQ
CV1: DO FREQ
Q33 2SC2009
DO RF AMP
Q36 2SK43-2
IC22 SN74LS00N
TP15
TP14
TP17
TP16
DROPOUT (TBC)
DROPOUT-1
DROPOUT-2
DO SIG OUT
TO TBC CN640-6
CN684
DO SIG (CN PANEL)
IC19 SN74LS221N
IC20 SN74LS221N
IC15 SN74LS04N
IC14 SN74265N
IC10 TL082CP
IC5 TL082CP
Q35 2SC1636
TP19
TP13
TP18
IC26 SN74LS123N
NORM FWD+EE
SYNC LACK
VIDEO LACK
RF ENVELOPE
RF LEVEL
RF ENVELOPE(X)
RF ENVELOPE(G)
RV25: RF ENVELO LEVEL

EQ-02 BOARD
BOARD NO. 1-606-659-14 & UP
BVH-2000PS(AEP); #22301 -

DM-25 BOARD (1-606-661-11)

Component Side

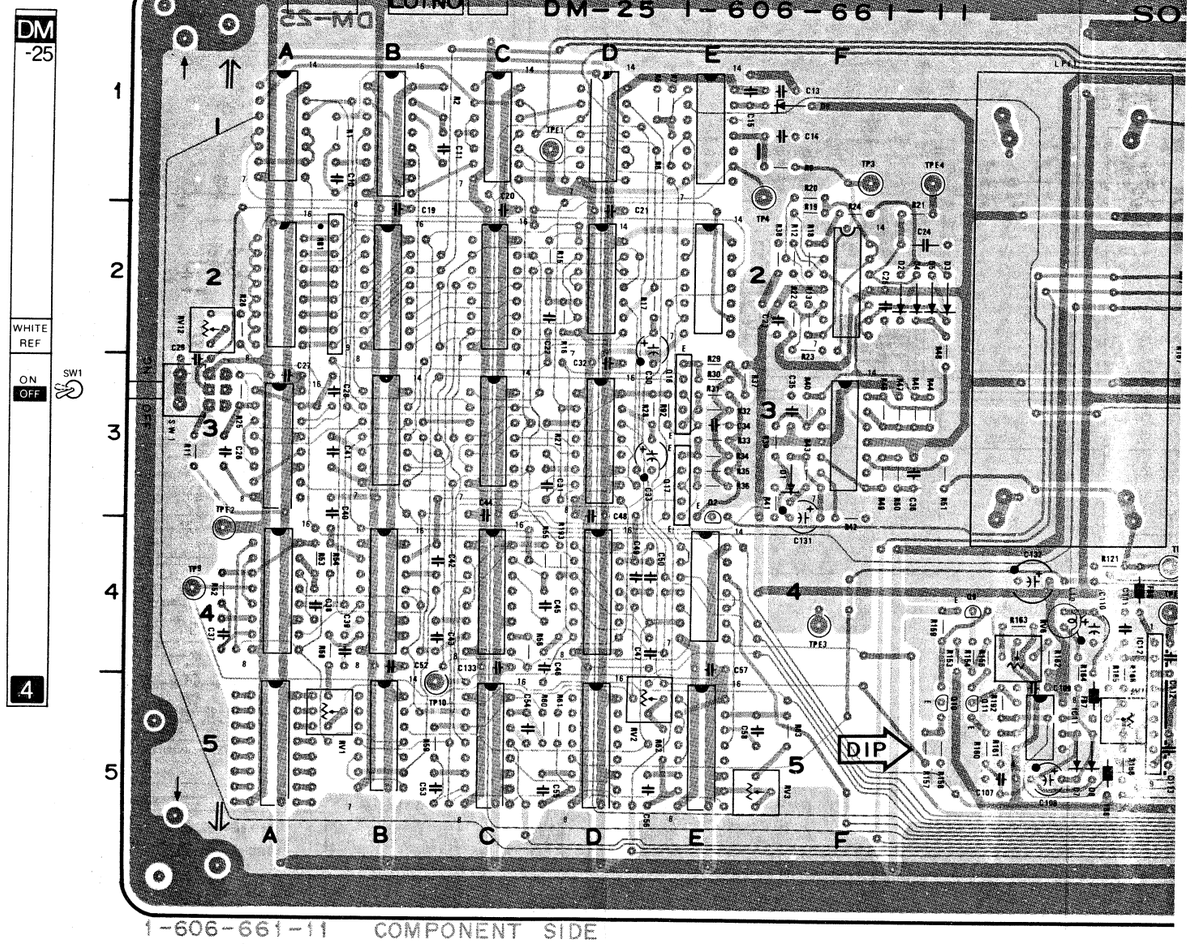

RB1

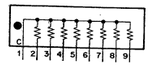

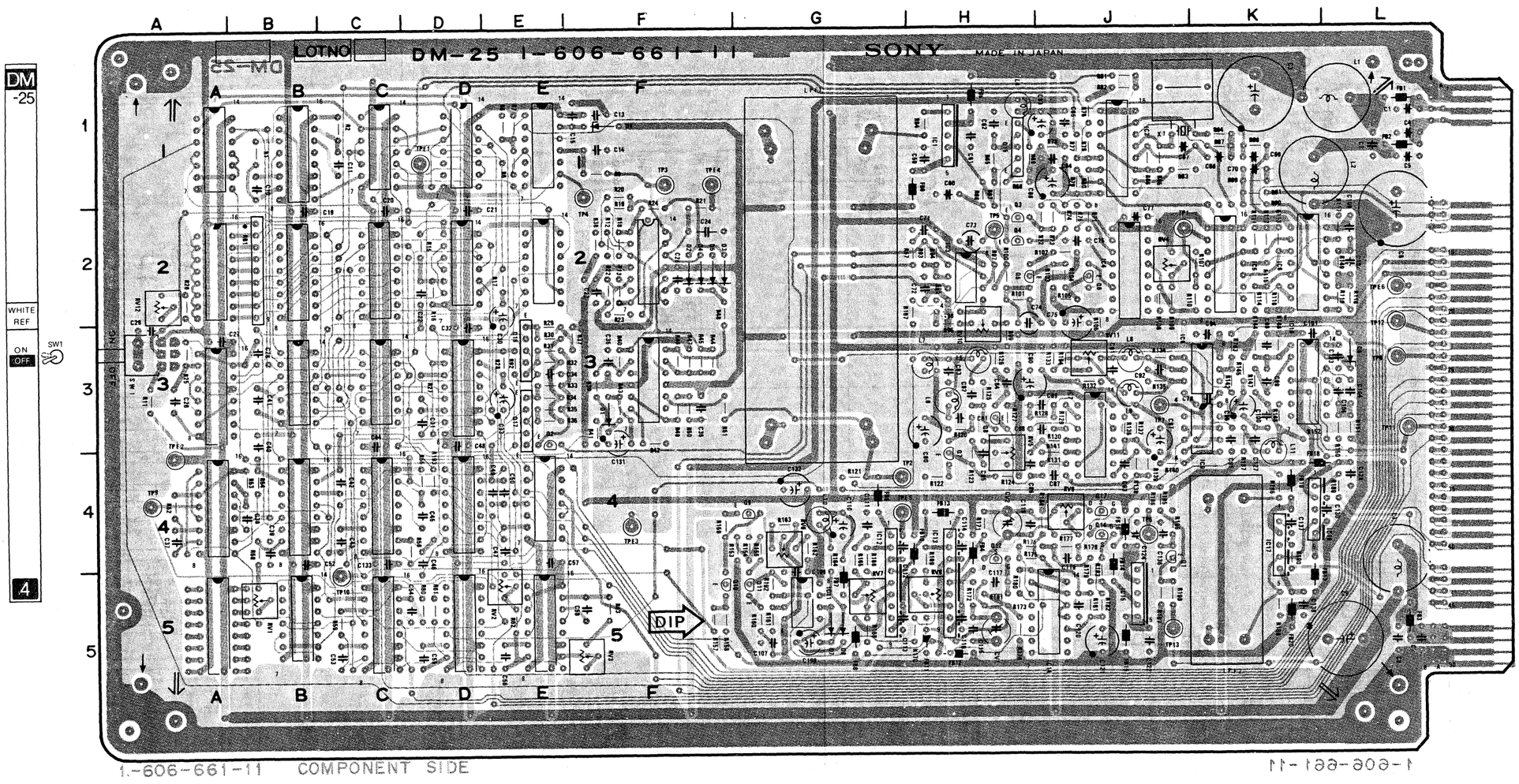

DM-25 (1-606-661-11)

BVH-2000(J,U/C)		Q1	4J
BVH-2000PS		Q2	3E
		Q3	2H
CV1	5H	Q4	2H
CV2	4H	Q5	2H
		Q6	2J
D1	3F	Q7	4H
D2	2F	Q8	3H
D3	3F	Q9	4G
D4	3F	Q10	5F
D5	3F	Q11	5G
D6	3L	Q12	4H
D7	5G	Q13	4J
D8	5G	Q14	4J
D9	1F	Q15	1H
		Q16	3E
IC1	1H	Q17	3E
IC1A			
IC1B		RB1	2B
IC1C			
IC1D		RV1	5B
IC1E		RV2	5E
IC2	1J	RV3	5F
IC2B		RV4	2J
IC2C		RV5	4H
IC2D		RV6	4G
IC2E		RV7	5G
IC2F		RV8	5H
IC3	2H	RV9	4J
IC3A		RV10	3H
IC3B		RV11	3J
IC3C		RV12	2A
IC3D			
IC3F		(PS)	
IC4	2J	RV13	5A
IC4A			
IC4B		SW1	3A
IC4C		SW2A	
IC4D			
IC4E		TP1	2J
IC5	2K	TP2	4G
IC5B		TP3	1F
IC5C		TP4	1F
IC5D		TP5	2H
IC5E		TP6	4J
IC6	2K	TP7	3J
IC7	3J	TP8	3L
IC8	3K	TP9	4A
IC9	3K	TP10	5C
IC10	3K	TP11	3L
IC11	5G	TP12	3L
IC12	5G	TP13	5J
IC13	5H		
IC14	5J	TPE1	1D
IC15	5J	TPE2	4A
IC16	4K	TPE3	4F
IC17	4K	TPE4	1F
		TPE5	4G
		TPE6	2L

RB1

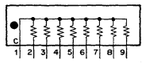

DM-25 BOARD

Video Demodulator

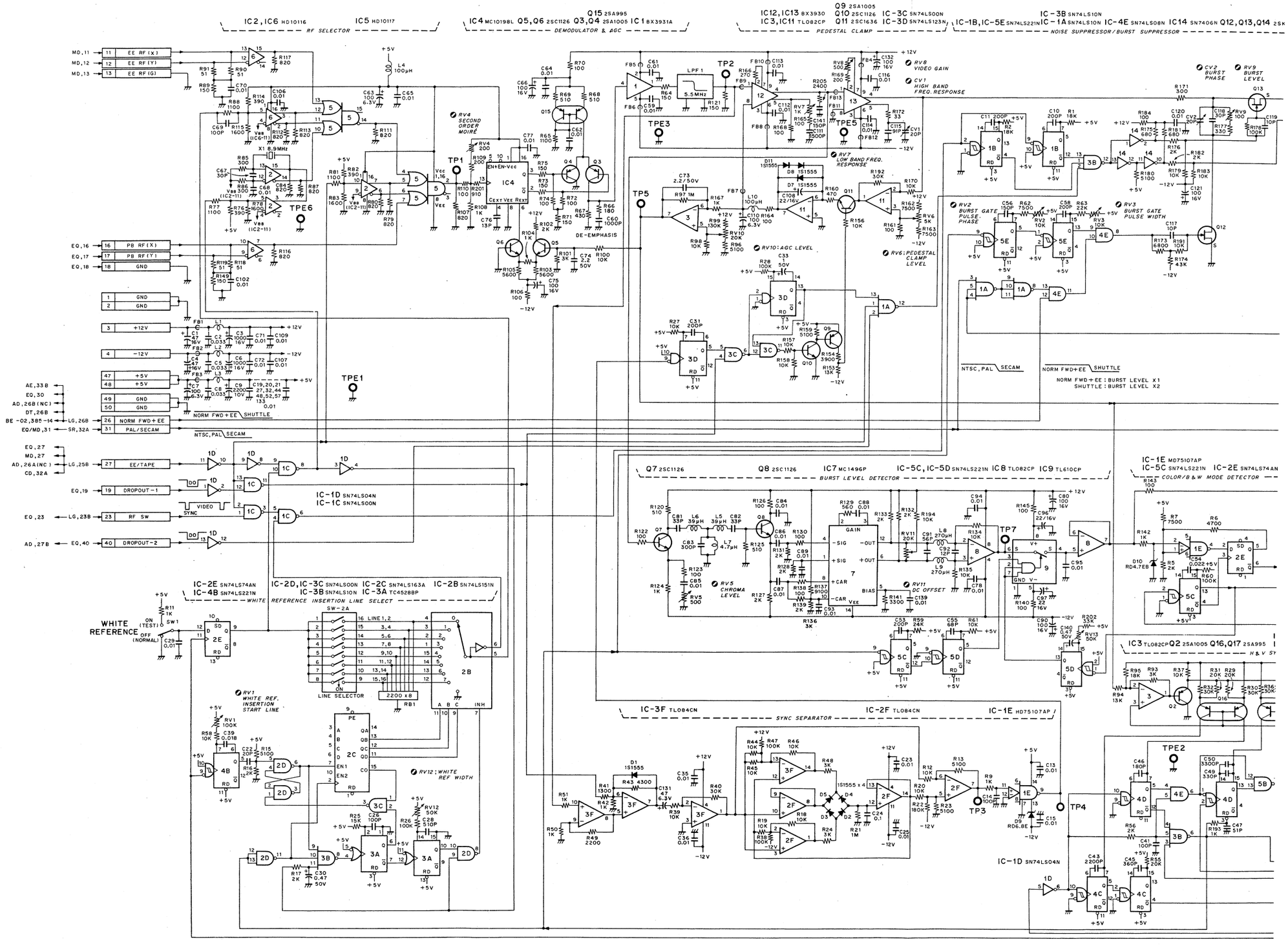

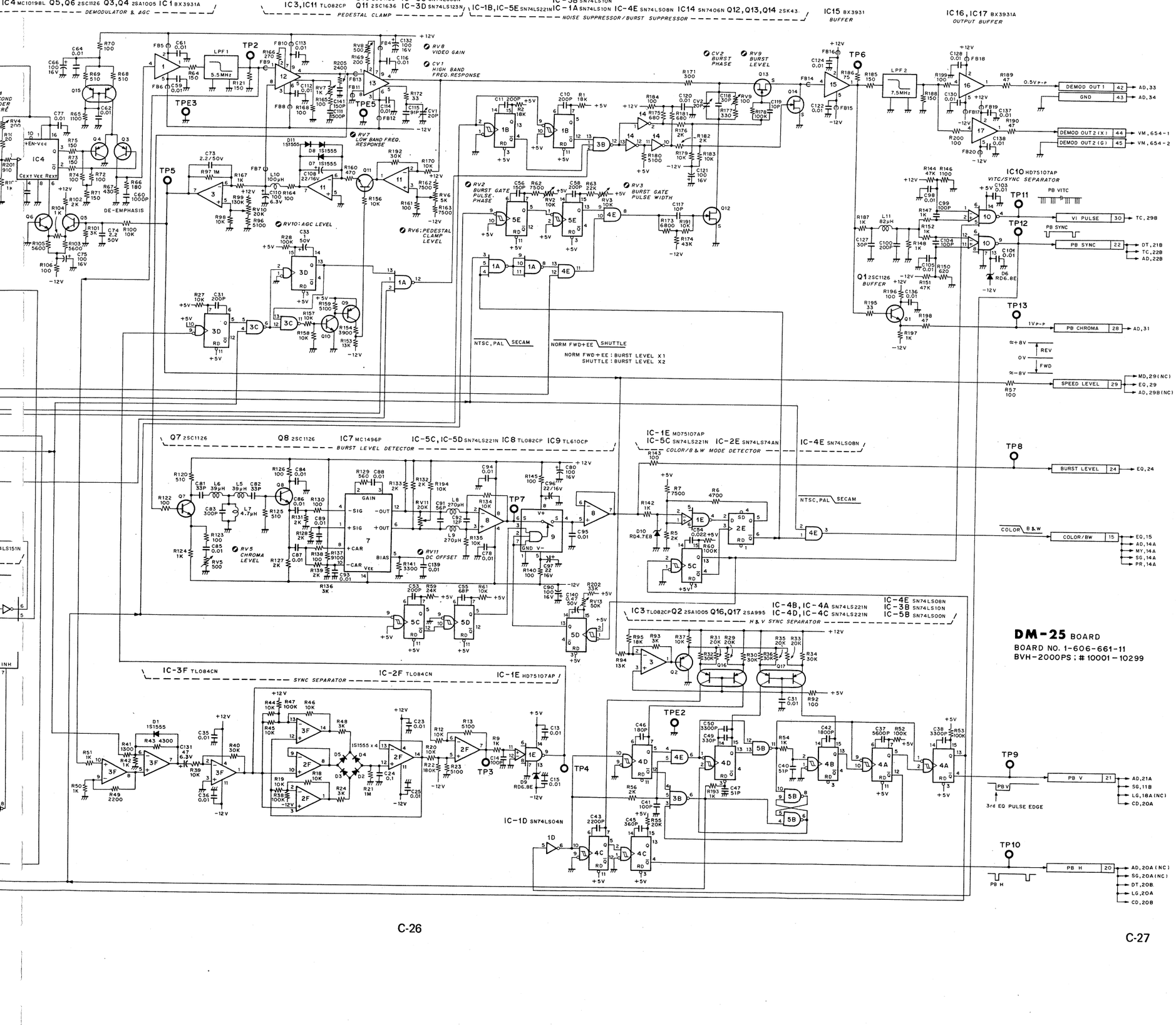

DM-25 BOARD
BOARD NO. 1-606-661-11
BVH-2000PS ; # 10001-10299

DM-25 BOARD (1-606-661-12)

Component Side

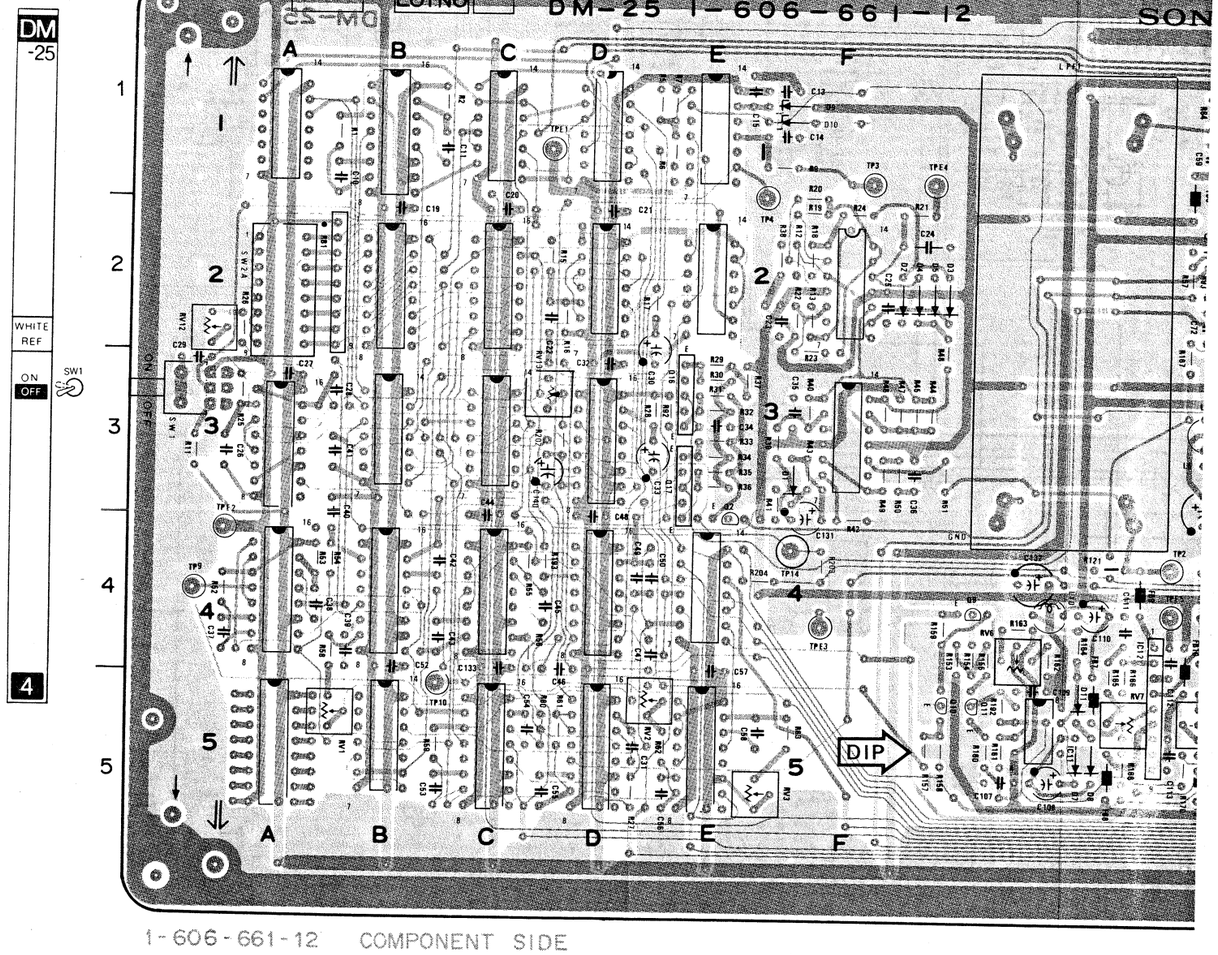

1-606-661-12 COMPONENT SIDE

RB1

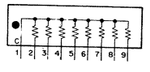

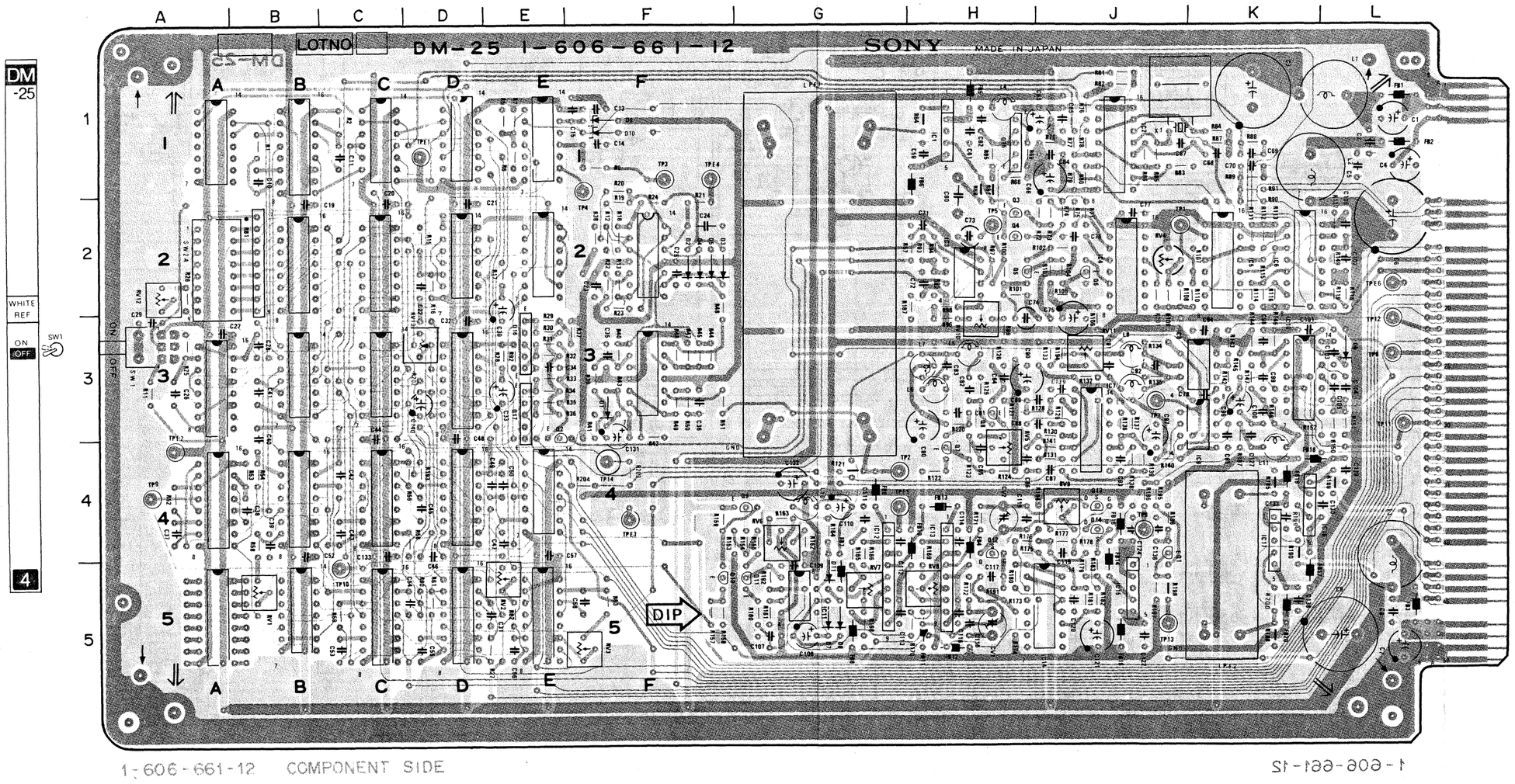

1-606-661-12 COMPONENT SIDE

1-606-661-12

RB1

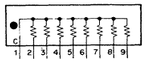

C-27(3/19)

C-27(4/19)

DM-25 (1-606-661-12)

BVH-2000(J,U/C)
BVH-2000PS

CV1	5H	Q1	4J
CV2	4H	Q2	3E
		Q3	2H
D1	3F	Q4	2H
D2	2F	Q5	2H
D3	2F	Q6	2J
D4	2F	Q7	4H
D5	2F	Q8	3H
D6	3L	Q9	4G
D7	5G	Q10	5F
D8	5G	Q11	5G
D9	1F	Q12	4H
D10	1F	Q13	4J
D11	5G	Q14	4J
		Q15	1H
IC1	1H	Q16	3E
IC1A		Q17	3E
IC1B			
IC1C		RB1	2B
IC1D			
IC1E		RV1	5B
		RV2	5E
IC2	1J	RV3	5F
IC2B		RV4	2J
IC2C		RV5	4H
IC2D		RV6	4G
IC2E		RV7	5G
IC2F		RV8	5H
IC3	2H	RV9	4J
IC3A		RV10	3H
IC3B		RV11	3J
IC3C		RV12	2A
IC3D		RV13	3D
IC3F			
IC4	2J	SW1	3A
IC4A		SW2A	
IC4B			
IC4C		TP1	2J
IC4D		TP2	4G
IC4E		TP3	1F
IC5	2K	TP4	1F
IC5B		TP5	2H
IC5C		TP6	4J
IC5D		TP7	3J
IC5E		TP8	3L
IC6	2K	TP9	4A
IC7	3J	TP10	5C
IC8	3K	TP11	3L
IC9	3K	TP12	3L
IC10	3K	TP13	5J
IC11	5G	TP14	4F
IC12	5G		
IC13	5H	TPE1	1D
IC14	5J	TPE2	4A
IC15	5J	TPE3	4F
IC16	4K	TPE4	1F
IC17	4K	TPE5	4G
		TPE6	2L
		X1	1J

DM-25 BOARD

Video Demodulator

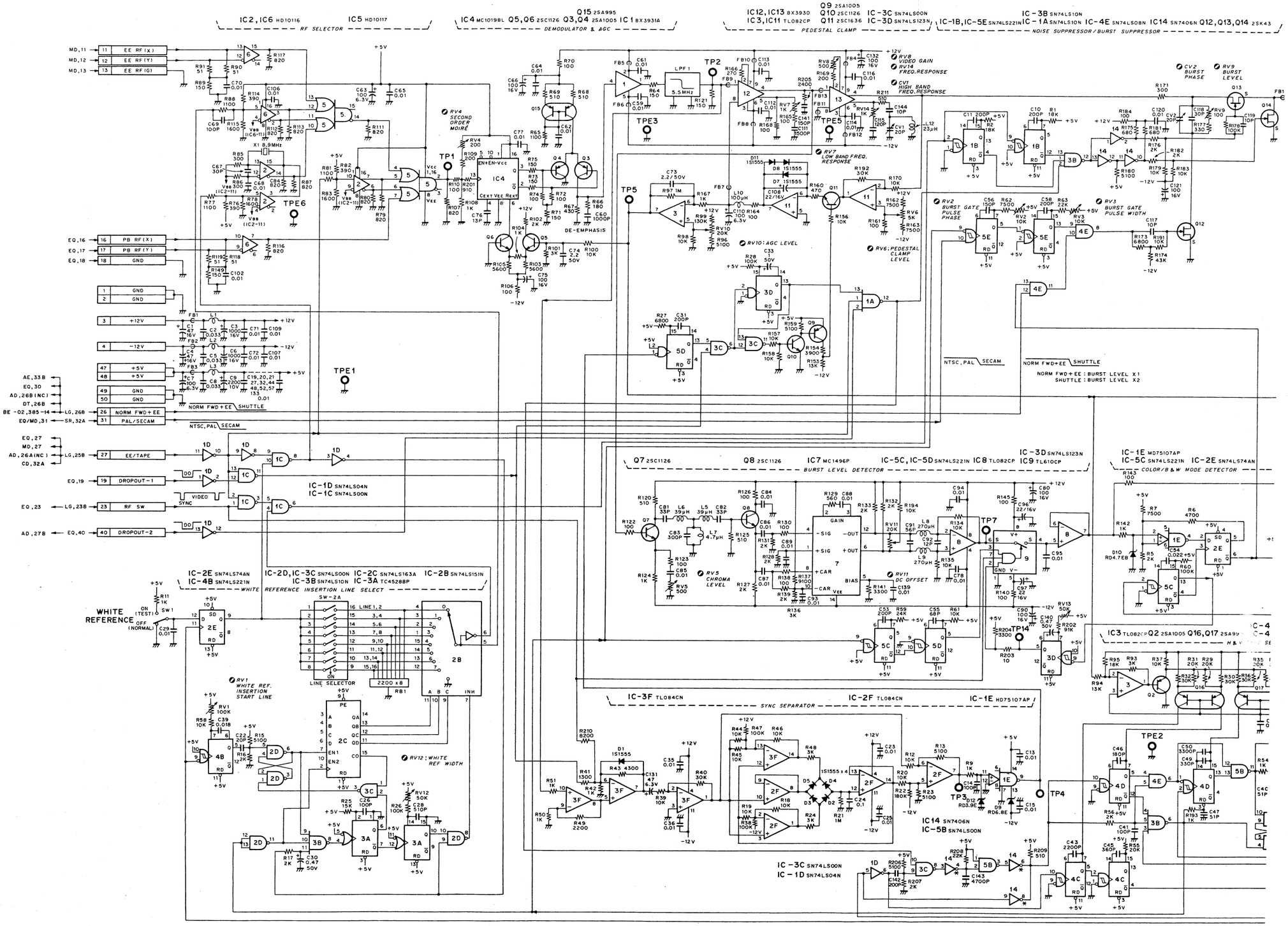

C-27(5/19)

C-27(6/19)

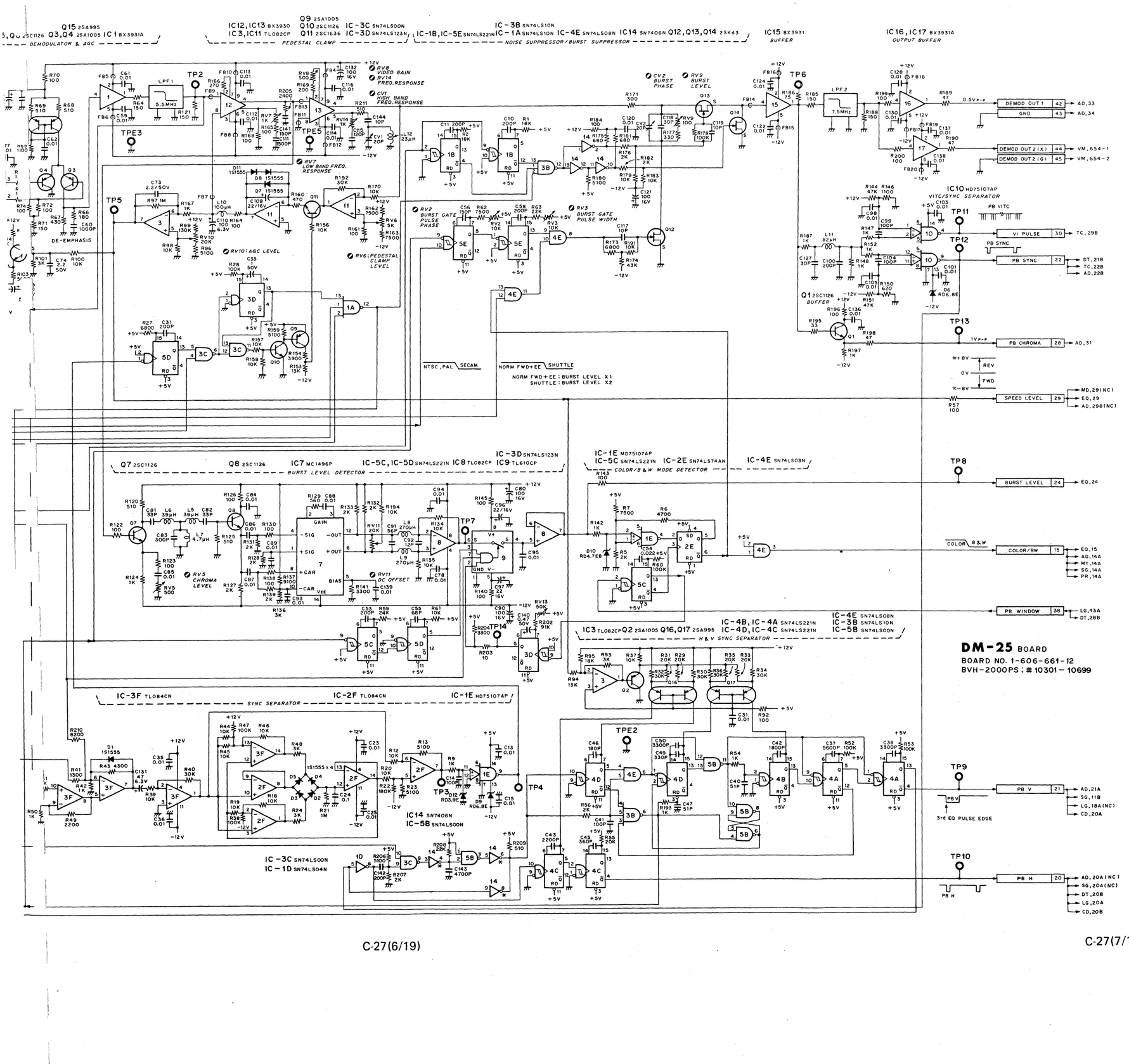
Q15 2SA995 Q3,Q4 2SA1005 IC1 BX3931A
DEMODULATOR & AGC
IC12,IC13 BX3930 IC3,IC11 TL082CP
Q9 2SA1005 Q10 2SC1126 Q11 2SC1636
IC-3C SN74LS00N IC-3D SN74LS123N
PEDESTAL CLAMP
IC-3B SN74LS10N IC-1A SN74LS10N IC-4E SN74LS08N IC14 SN7406N Q12,Q13,Q14 2SK43
IC-1B,IC-5E SN74LS221N
NOISE SUPPRESSOR/BURST SUPPRESSOR
IC15 BX3931 BUFFER
IC16,IC17 BX3931A OUTPUT BUFFER
RV8 VIDEO GAIN
RV14 FREQ.RESPONSE
RV1 HIGH BAND FREQ.RESPONSE
CV2 BURST PHASE
RV9 BURST LEVEL
RV7 LOW BAND FREQ. RESPONSE
RV2 BURST GATE PULSE PHASE
RV3 BURST GATE PULSE WIDTH
RV10 AGC LEVEL
RV6 PEDESTAL CLAMP LEVEL
DE-EMPHASIS
IC10 HD75107AP VITC/SYNC SEPARATOR
DEMOD OUT 1 42 AD,33
GND 43 AD,34
DEMOD OUT 2 (X) 44 VM,654-1
DEMOD OUT 2 (G) 45 VM,654-2
VI PULSE 30 TC,29B
PB SYNC 22 DT,21B TC,22B AD,22B
PB CHROMA 28 AD,31
SPEED LEVEL 29 MD,29(NC) EQ,29 AD,29B(NC)
NTSC,PAL SECAM
NORM FWD+EE SHUTTLE
NORM FWD+EE : BURST LEVEL X1
SHUTTLE : BURST LEVEL X2
Q7 2SC1126 Q8 2SC1126
IC7 MC1496P
IC-5C,IC-5D SN74LS221N IC8 TL082CP IC9 TL610CP
IC-3D SN74LS123N
BURST LEVEL DETECTOR
RV5 CHROMA LEVEL
RV11 DC OFFSET
IC-1E MD75107AP IC-5C SN74LS221N IC-2E SN74LS74AN IC-4E SN74LS08N
COLOR/B&W MODE DETECTOR
BURST LEVEL 24 EQ,24
COLOR/BW 15 EQ,15 AD,14A MY,14A SG,14A PR,14A
PB WINDOW 38 LG,43A DT,28B
IC3 TL082CP Q2 2SA1005 Q16,Q17 2SA995
IC-4B,IC-4A SN74LS221N IC-4D,IC-4C SN74LS221N
IC-4E SN74LS08N IC-3B SN74LS10N IC-5B SN74LS00N
H & V SYNC SEPARATOR
IC-3F TL084CN IC-2F TL084CN IC-1E MD75107AP
SYNC SEPARATOR
IC14 SN7406N IC-5B SN74LS00N
IC-3C SN74LS00N IC-1D SN74LS04N
PB V 21 AD,21A SG,11B LG,18A(NC) CD,20A
3rd EQ PULSE EDGE
PB H 20 AD,20A(NC) SG,20A(NC) DT,20B LG,20A CD,20B
DM-25 BOARD
BOARD NO. 1-606-661-12
BVH-2000PS ; # 10301 - 10699

1-606-661-14

2000(J); #10801 – 22399
2000(U/C); #11001 – 22599
2000PS; #10701 – 12299
2500(J); #10001 – 10199
2500(U/C); #10001 – 10199

DM-25 BOARD (1-606-661-14)
Component Side

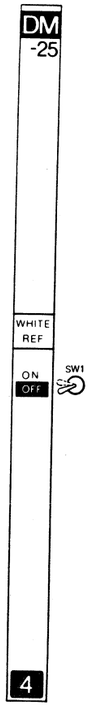

2000(J); #10801 – 22399
2000(U/C); #11001 – 22599
2000PS; #10701 – 12299
2500(J); #10001 – 10199
2500(U/C); #10001 – 10199

1-606-661-14

CARD RACK **DM-25**

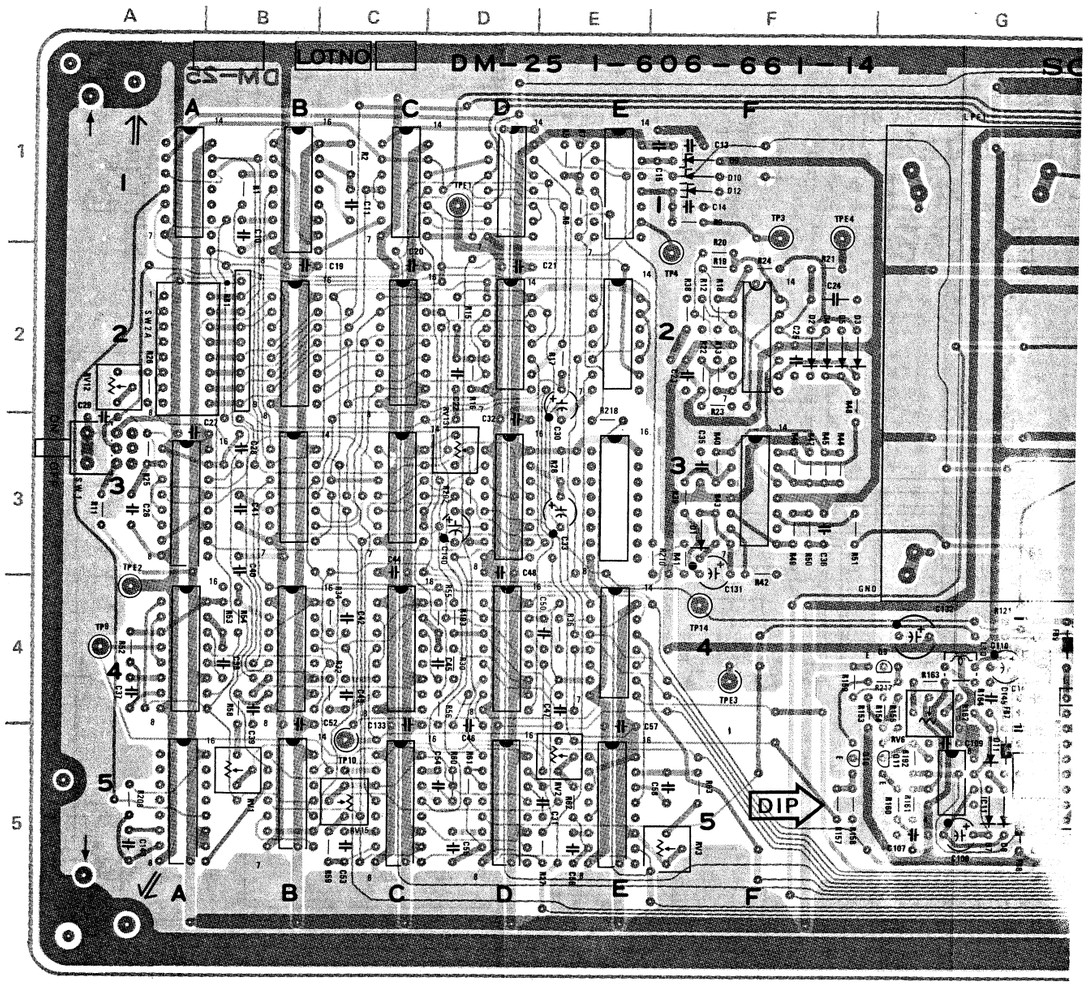

■ 1-606-661-14 COMPONENT SIDE

RB1

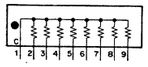

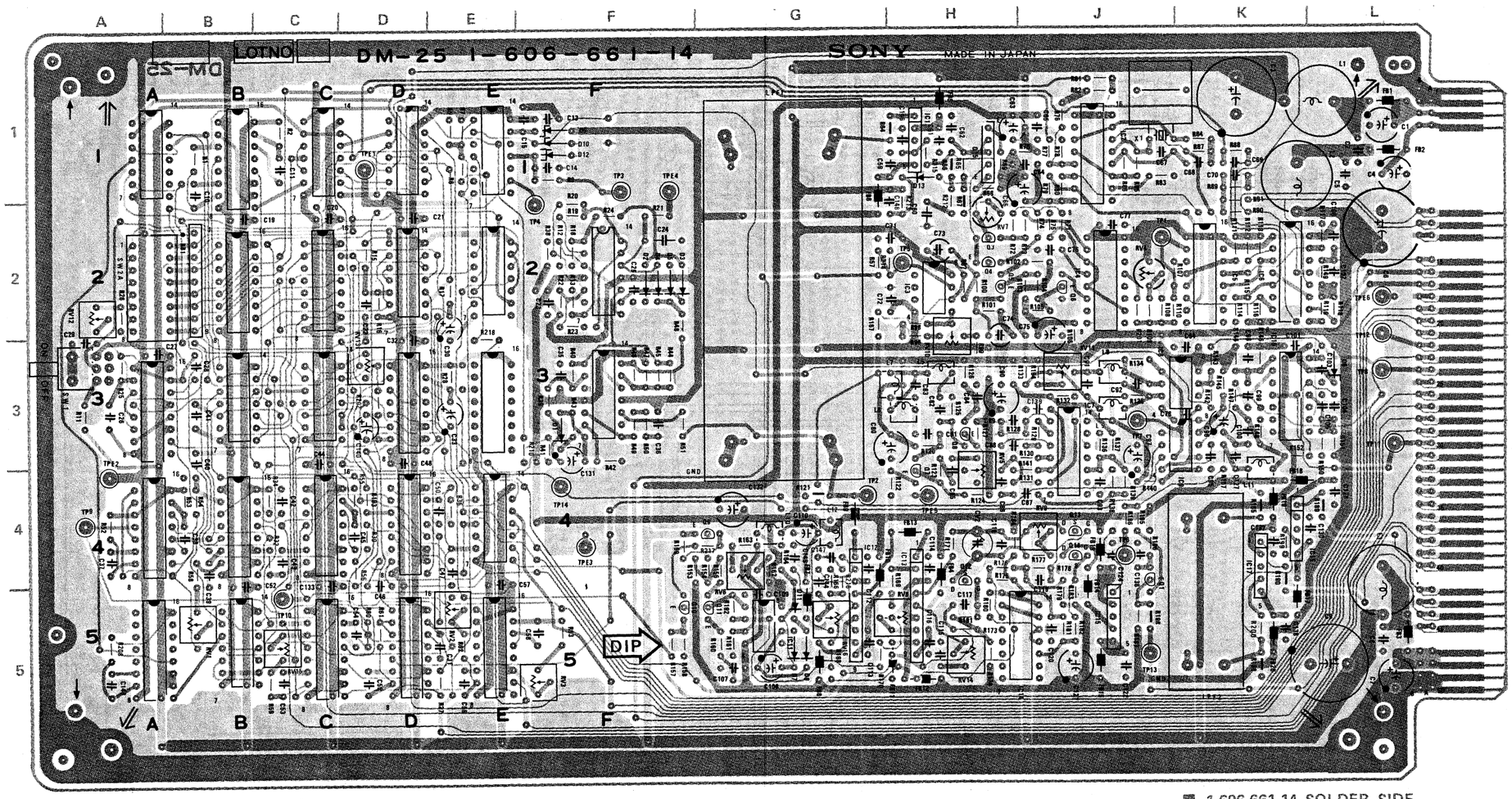

■ 1-606-661-14 COMPONENT SIDE

■ 1-606-661-14 SOLDER SIDE

DM-25 (1-606-661-14)

BVH-2000(J,U/C)
BVH-2000PS
BVH-2500(J,U/C)

CV2	4H	Q1	4J
		Q3	2H
D1	3F	Q4	2H
D2	2F	Q5	2H
D3	2F	Q6	2J
D4	2F	Q7	4H
D5	2F	Q8	3H
D6	3L	Q9	4G
D7	5G	Q10	5F
D8	5G	Q11	5G
D9	1F	Q12	4H
D10	1F	Q13	4J
D11	5G	Q14	4J
D12	1F	Q15	1H
D13	1H		
		RB1	2B
IC1	1H		
IC1A		RV1	5B
IC1B		RV2	5E
IC1C		RV3	5F
IC1D		RV4	2J
IC1E		RV5	4H
IC2	1J	RV6	4G
IC2B		RV7	2H
IC2C		RV8	5H
IC2D		RV9	4J
IC2E		RV10	3H
IC2F		RV11	3J
IC3	2H	RV12	2A
IC3A		RV13	3D
IC3B		RV14	5H
IC3C		RV15	5C
IC3D		RV16	5G
IC3F			
IC4	2J	SW1	3A
IC4A		SW2A	
IC4B			
IC4C		TP1	2J
IC4D		TP2	4G
IC4E		TP3	1F
IC5	2K	TP4	1F
IC5A		TP5	2H
IC5B		TP6	4J
IC5C		TP7	3J
IC5D		TP8	3L
IC5E		TP9	4A
IC6	2K	TP10	5C
IC7	3J	TP11	3L
IC8	3K	TP12	3L
IC9	3K	TP13	5J
IC10	3K	TP14	4F
IC11	5G		
IC12	5G	TPE1	1D
IC13	5H	TPE2	4A
IC14	5J	TPE3	4F
IC15	5J	TPE4	1F
IC16	4K	TPE5	4H
IC17	4K	TPE6	2L
		X1	1J

RB1

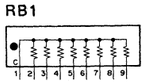

DM-25 BOARD

Video Demodulator

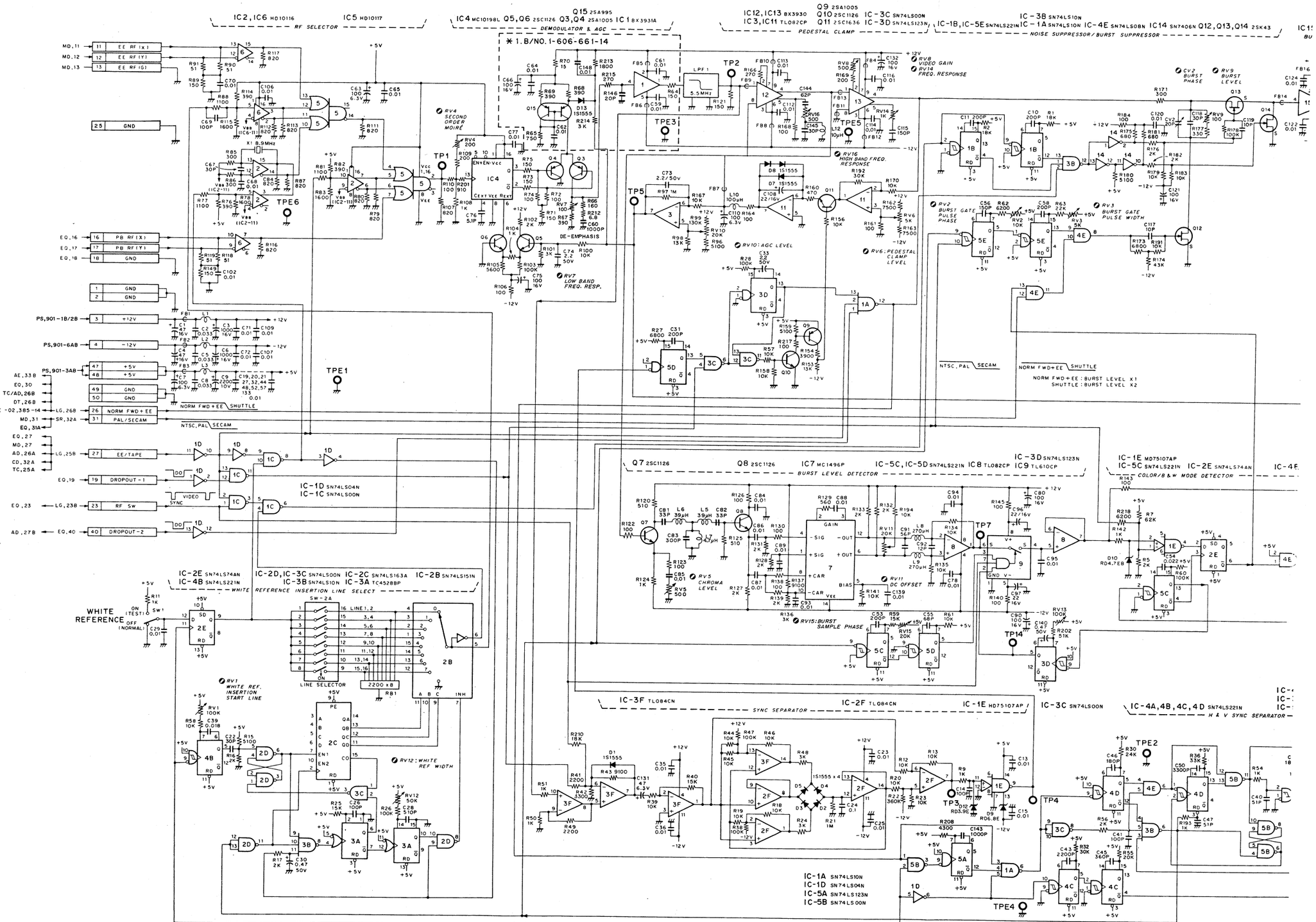

C-27(11/19)

C-27(12/19)

1-606-661-13, 14

2000(J); #10801 – 22399
2000(U/C); #11001 – 22599
2000PS; #10701 – 12299

2500(J); #10001 – 10199
2500(U/C); #10001 – 10199

2500(J); #10001 – 10199
2500(U/C); #10001 – 10199

2000(J); #10801 – 22399
2000(U/C); #11001 – 22599
2000PS; #10701 – 12299

1-606-661-13, 14

CARD RACK DM-25

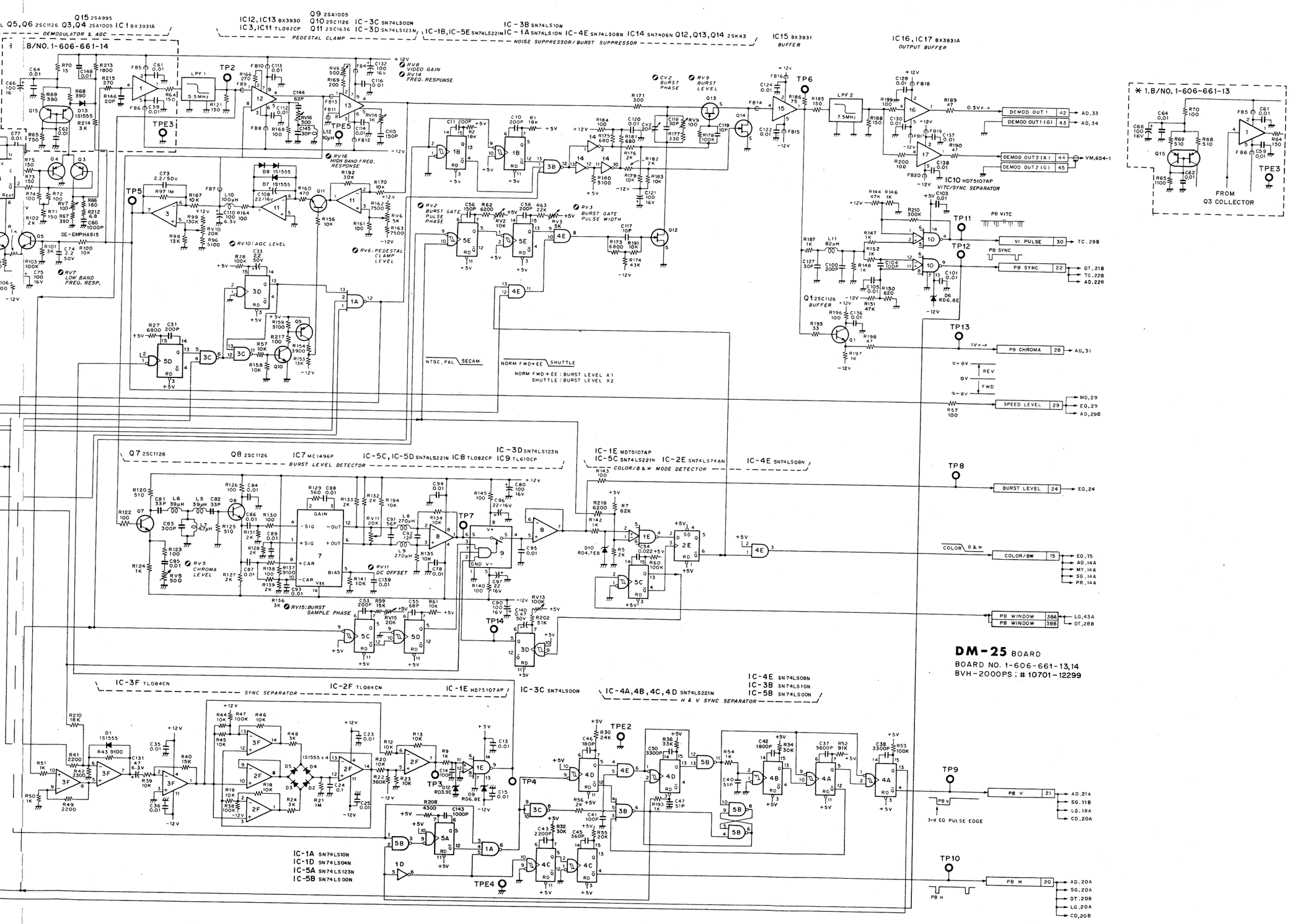

DM-25 BOARD
BOARD NO. 1-606-661-13,14
BVH-2000PS ; # 10701-12299

1-606-661-14

2000(J); #22401 –
2000(U/C); #22601 –
2000PS; #22301 –
2000PM; #20201 –
2500(J); #10201 –
2500(U/C); #10201 –

DM-25 BOARD (1-606-661-14)

Component Side

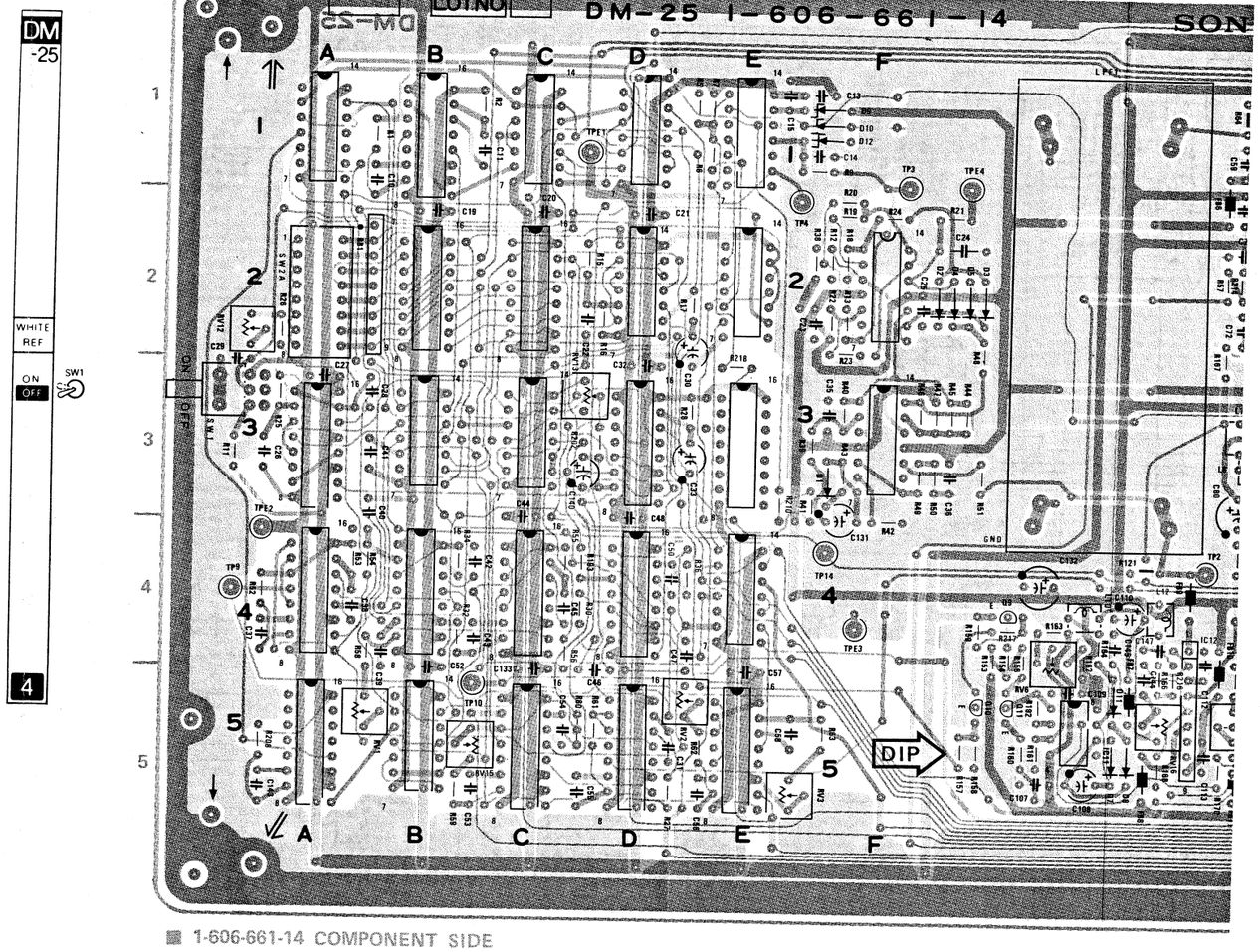

■ 1-606-661-14 COMPONENT SIDE

2000(J); #22401 –
2000(U/C); #22601 –
2000PS; #22301 –
2000PM; #20201 –
2500(J); #10201 –
2500(U/C); #10201 –

1-606-661-14

CARD RACK **DM-25**

SW-86 BOARD (1-613-185-11)

Component Side

For NTSC, PM

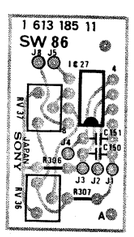

■ 1-613-185-11 SOLDER SIDE

RB1

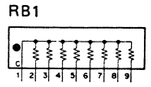

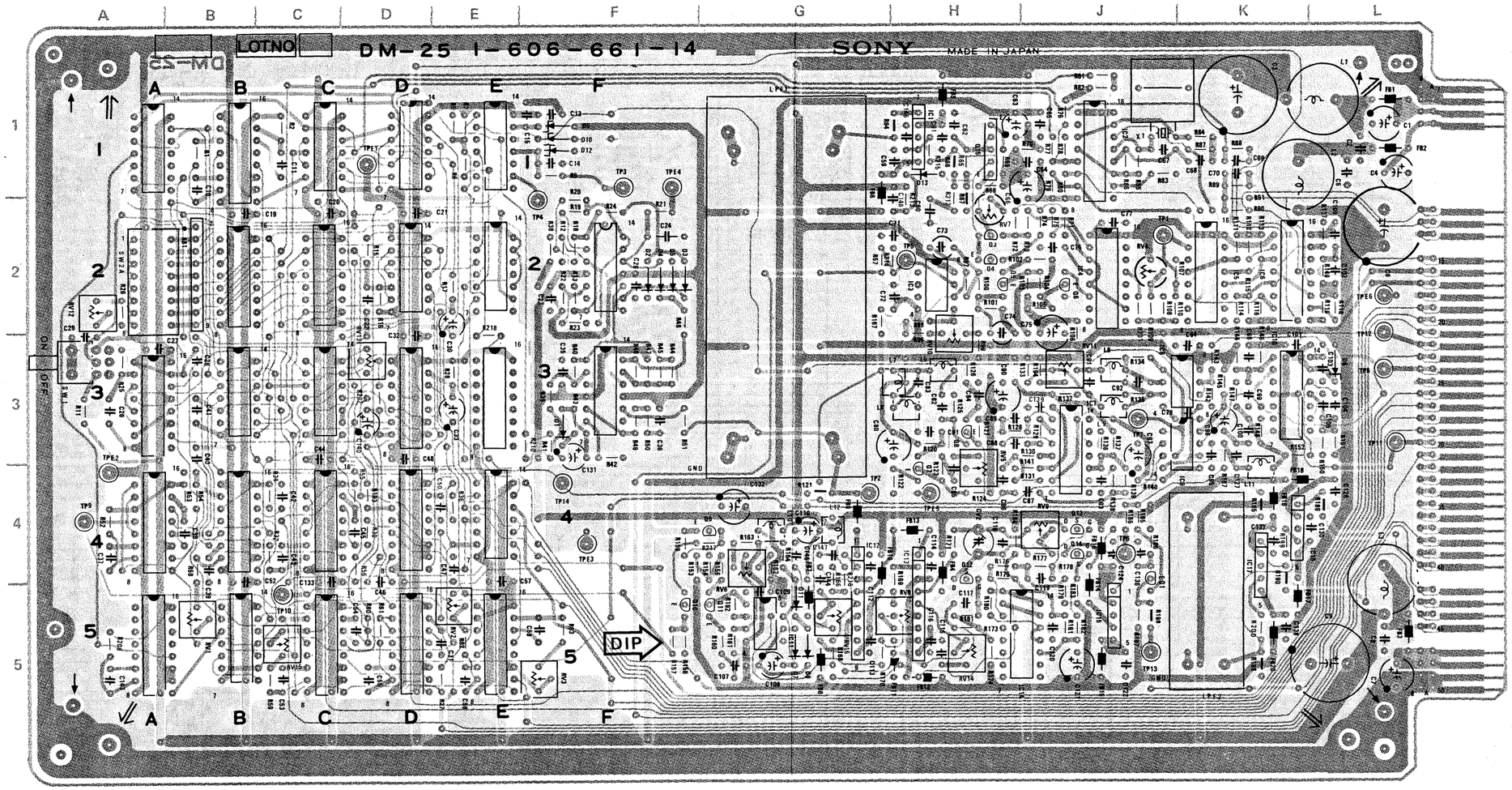

■ 1-606-661-14 COMPONENT SIDE

■ 1-606-661-14 SOLDER SIDE

DM-25 (1-606-661-14 & UP)

BVH-2000(J,U/C)
BVH-2000PS
BVH-2000PM
BVH-2500(J,U/C)

CV2	4H	Q5	2H
		Q6	2J
D1	3F	Q7	4H
D2	2F	Q8	3H
D3	2F	Q9	4G
D4	2F	Q10	5F
D5	2F	Q11	5G
D6	3L	Q12	4H
D7	5G	Q13	4J
D8	5G	Q14	4J
D9	1F	Q15	1H
D10	1F		
D11	5G	RB1	2B
D12	1F		
D13	1H	RV1	5B
		RV2	5E
IC1	1H	RV3	5F
IC1A		RV4	2J
IC1B		RV5	4H
IC1C		RV6	4G
IC1D		RV7	2H
IC1E		RV8	5H
IC2	1J	RV9	4J
IC2B		RV10	3H
IC2C		RV11	3J
IC2D		RV12	2A
IC2E		RV13	3D
IC2F		RV14	5H
IC3	2H	RV15	5C
IC3A		RV16	5G
IC3B		RV17	2J
IC3C			
IC3D		(SW-86 BOARD)	
IC3F		RV36	1A
IC4	2J	RV37	1A
IC4A			
IC4B		SW1	3A
IC4C		SW2A	
IC4D			
IC4E		TP1	2J
IC5	2K	TP2	4G
IC5A		TP3	1F
IC5B		TP4	1F
IC5C		TP5	2H
IC5D		TP6	4J
IC5E		TP7	3J
IC6	2K	TP8	3L
IC7	3J	TP9	4A
IC8	3K	TP10	5C
IC9	3K	TP11	3L
IC10	3K	TP12	3L
IC11	5G	TP13	5J
IC12	5G	TP14	4F
IC13	5H		
IC14	5J	(SW-86 BOARD)	
IC15	5J	TPA	2A
IC16	4K		
IC17	4K	TPE1	1D
		TPE2	4A
(SW-86 BOARD)		TPE3	4F
IC27	1A	TPE4	1F
		TPE5	4H
Q1	4J	TPE6	2L
Q3	2H		
Q4	2H	X1	1J

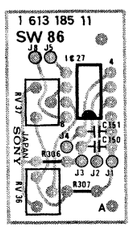

■ 1-613-185-11 SOLDER SIDE

RB1

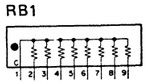

DM-25 BOARD

Video Demodulator

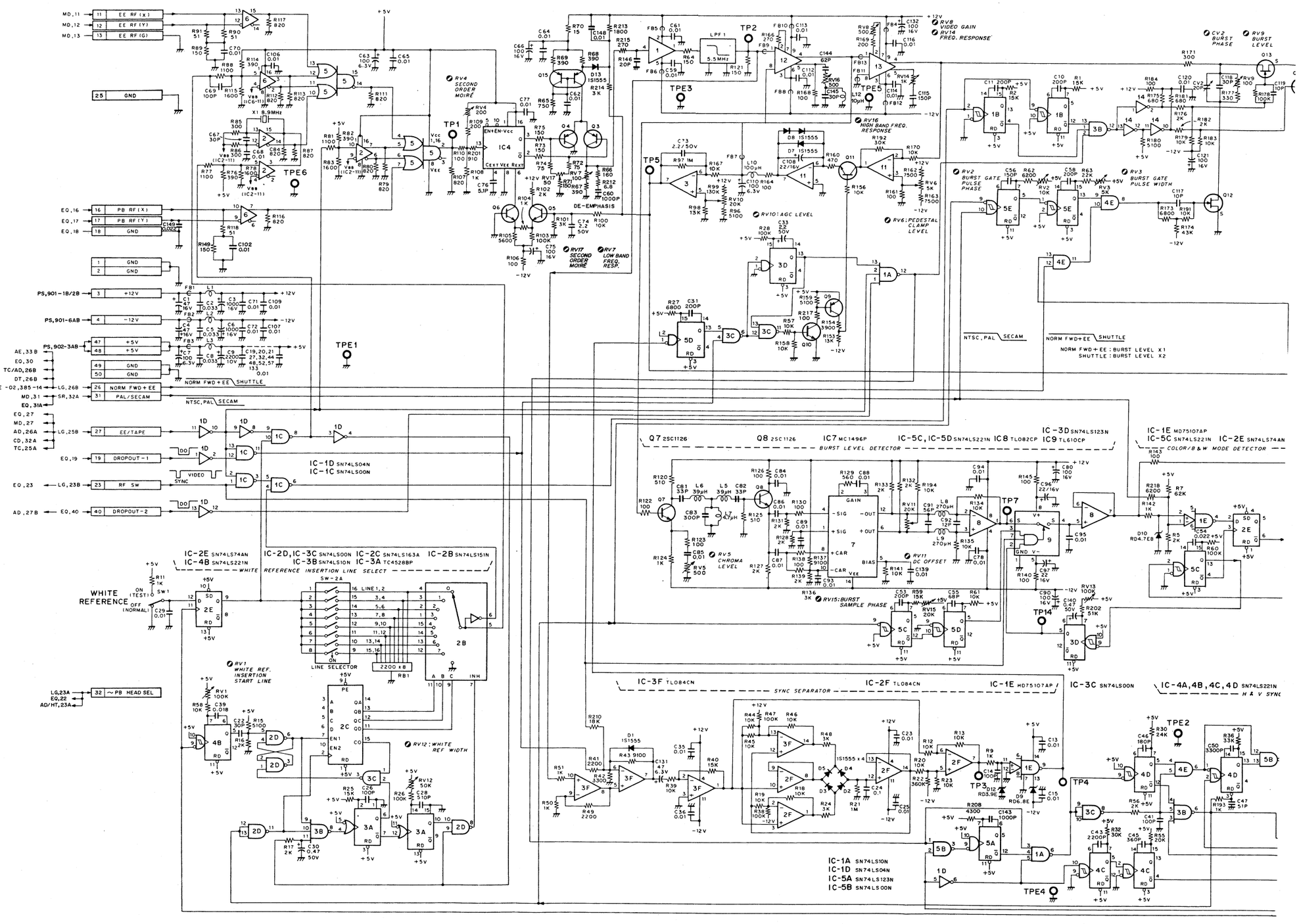

C-27(17/19) C-27(18/19)

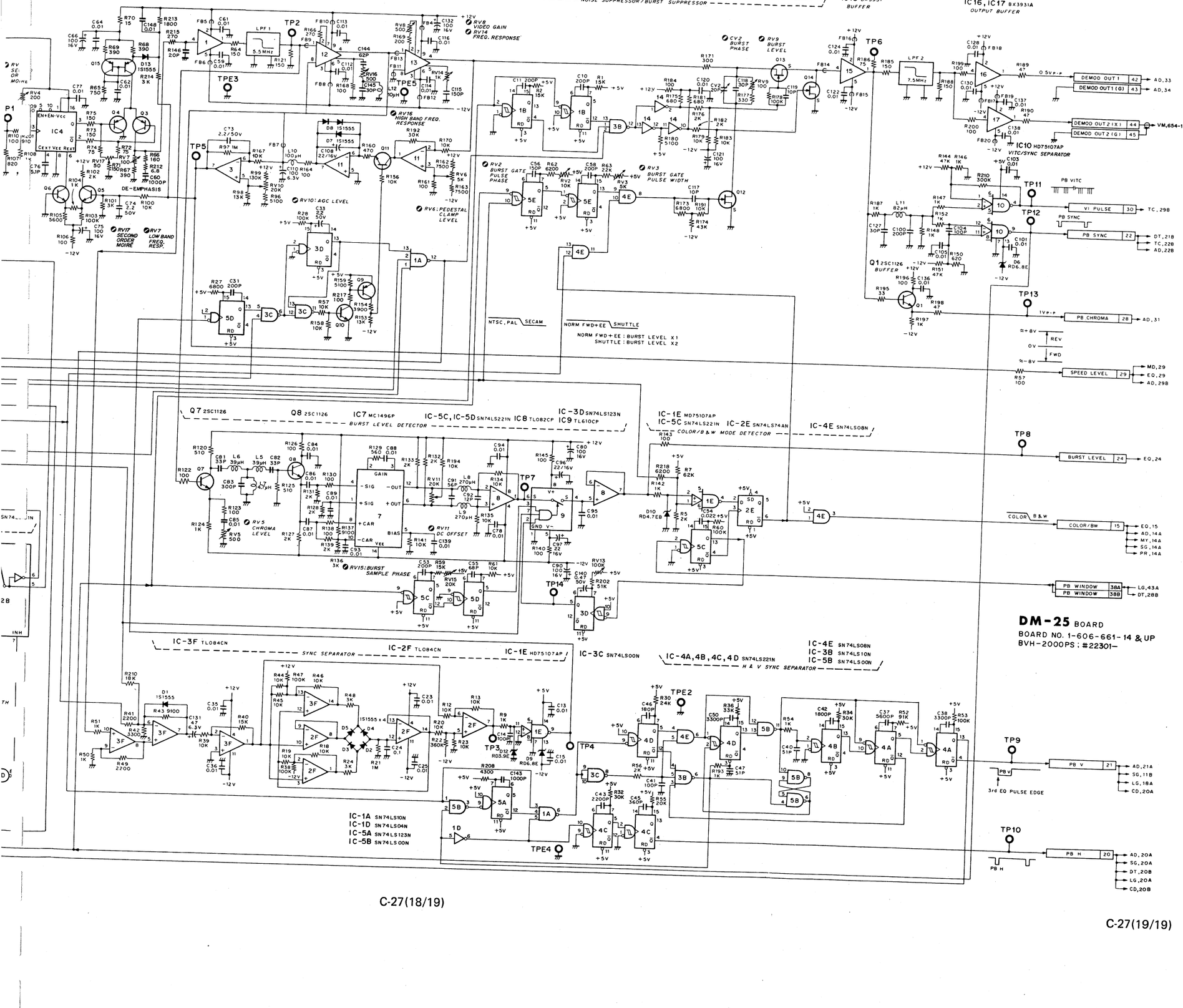

DM-25 BOARD
BOARD NO. 1-606-661-14 & UP
BVH-2000PS ; #22301–

MD-14 BOARD (1-606-660-11)

Component Side

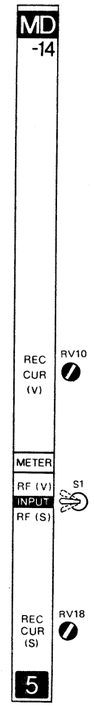

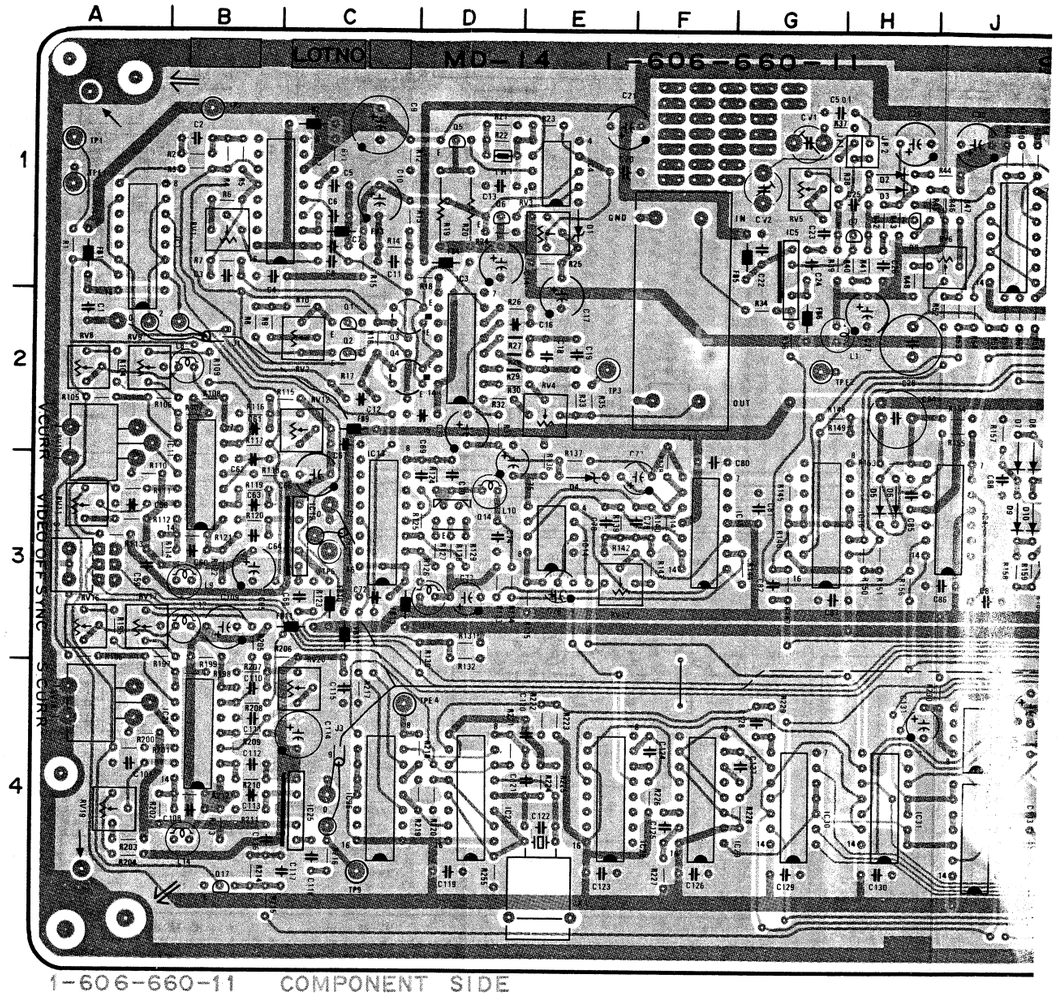

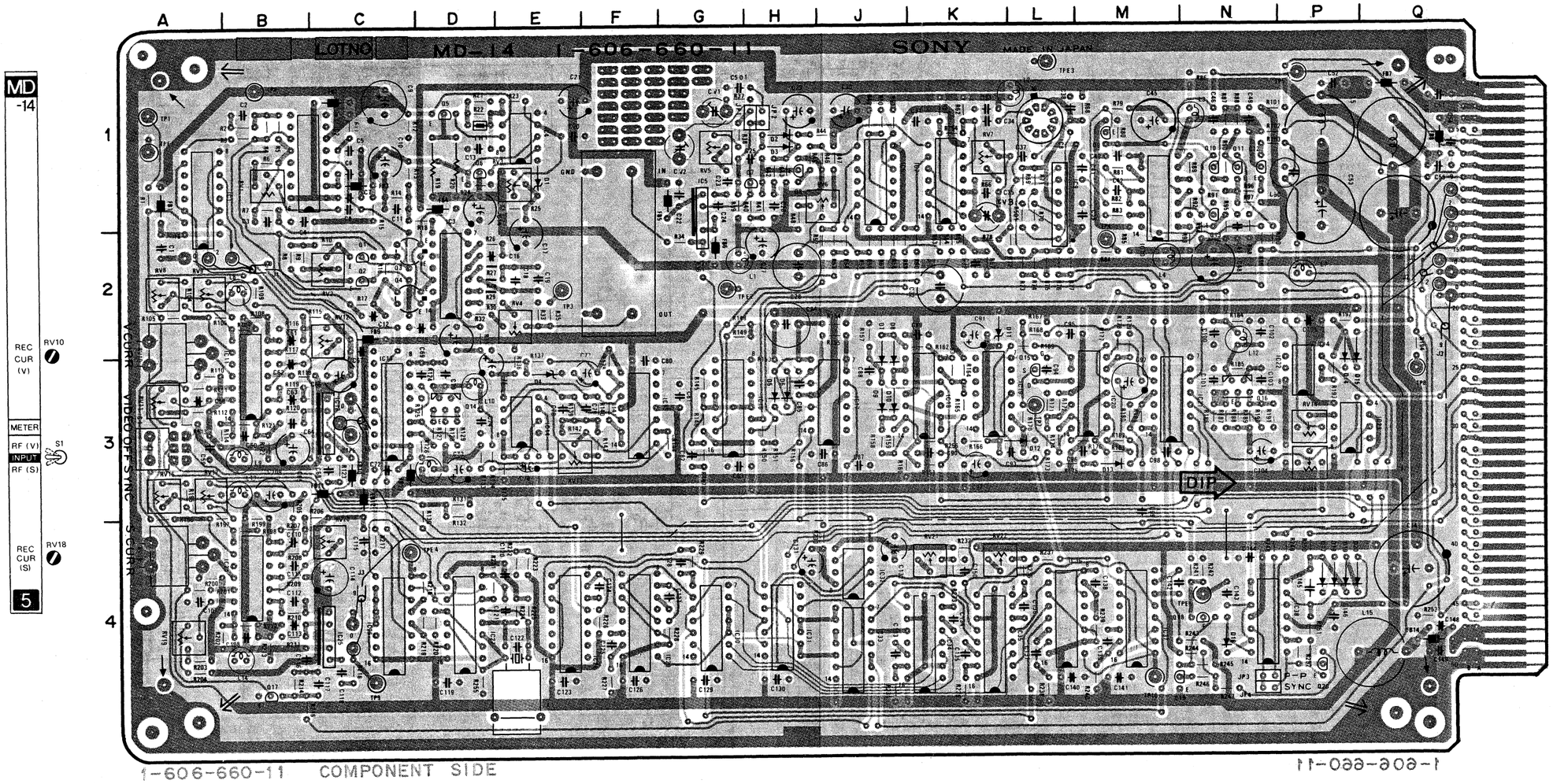

MD-14 (1-606-660-11)

BVH-2000(J,U/C)
BVH-2000PS

CV1	1G	Q1	2C	RV1	1B
CV2	1G	Q2	2C	RV2	2C
CV3	1K	Q3	2C	RV3	1E
		Q4	2C	RV4	2E
D1	1E	Q5	1D	RV5	1G
D2	1H	Q6	1D	RV6	1J
D3	2H	Q7	1H	RV7	1K
D4	3E	Q8	1H	RV8	2A
D5	3H	Q9	1M	RV9	2A
D6	3H	Q10	1N	RV10	2A
D7	3J	Q11	1N	RV11	2A
D8	3J	Q12	1N	RV12	2C
D9	3J	Q13	1N	RV13	3E
D10	3J	Q14	3D	RV14	3P
D11	2K	Q15	3L	RV15	3P
D12	3L	Q16	3N	RV16	3A
D13	3M	Q17	4B	RV17	3A
D14	3P	Q18	4N	RV18	4A
D15	3P	Q19	4M	RV19	4A
D16	4N	Q20	4P	RV20	4C
D17	4P	Q21	1F	RV21	4K
D18	4P			RV22	4k
D19	4P				
D20	4P			S1	3A
D21	3B				
D22	4B			TP1	1A
				TP2	1B
IC1	1A			TP3	2E
IC2	1B			TP4	2M
IC3	2D			TP5	1P
IC4	1E			TP6	3C
IC5	1G			TP7	3L
IC6	1K			TP8	3Q
IC7	1K			TP9	4C
IC8	1L			TP10	4M
IC9	1L				
IC10	1M			TPE1	1A
IC11	3B			TPE2	2G
IC12	3C			TPE3	1L
IC13	3C			TPE4	4C
IC14	3E			TPE5	4N
IC15	3F				
IC16	3G			X1	4E
IC17	3J				
IC18	3K				
IC19	3K				
IC20	3M				
IC21	3M				
IC22	3P				
IC23	3P				
IC24	4B				
IC25	4C				
IC26	4C				
IC27	4D				
IC28	4E				
IC29	4F				
IC30	4G				
IC31	4H				
IC32	4J				
IC33	4K				
IC34	4K				
IC35	4K				
IC36	4L				
IC37	4M				
IC38	4N				
JP1	1H				
JP2	1H				
JP3	4N				
JP4	4N				

MD-14 BOARD

Video Modulator

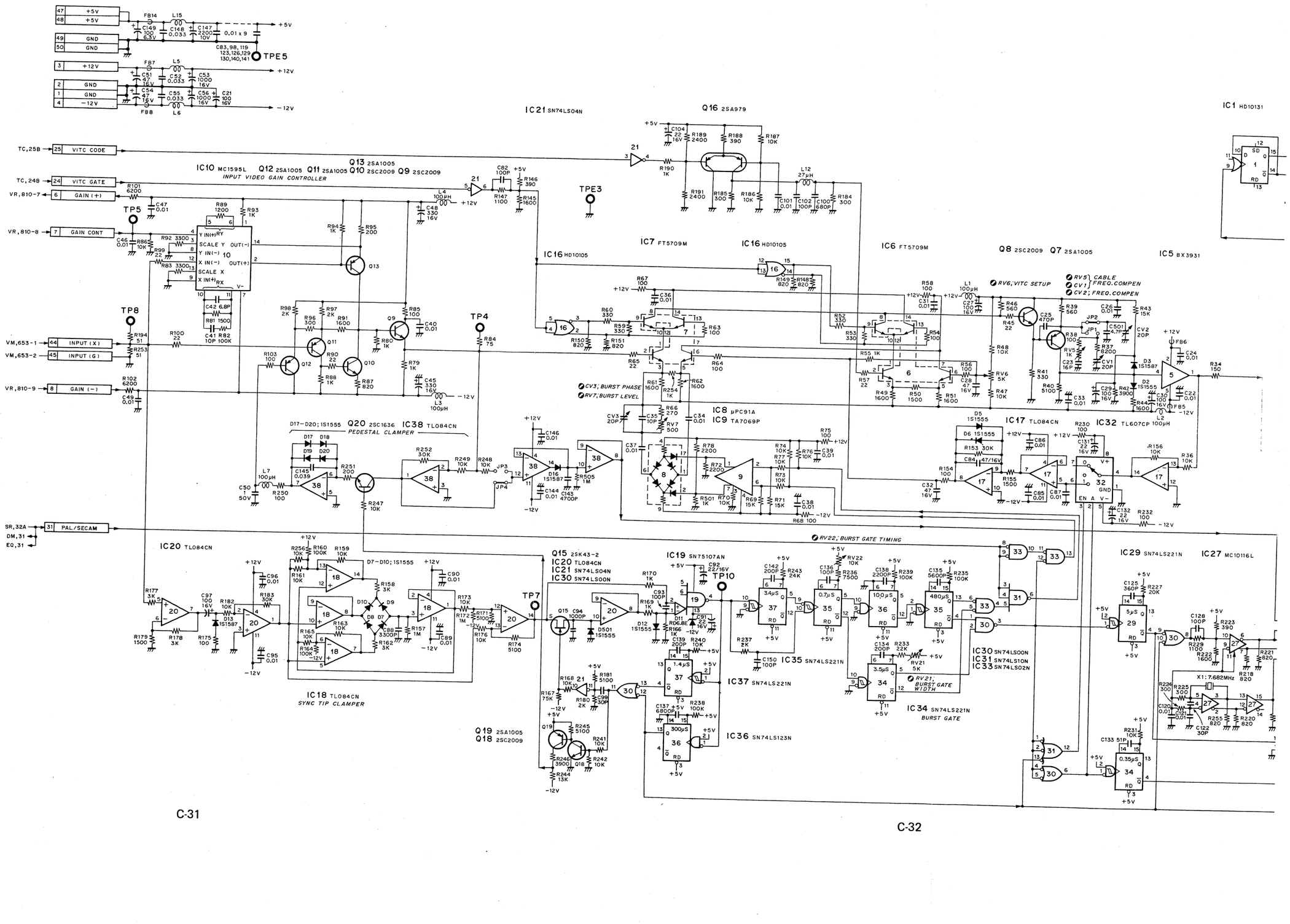

C-31

C-32

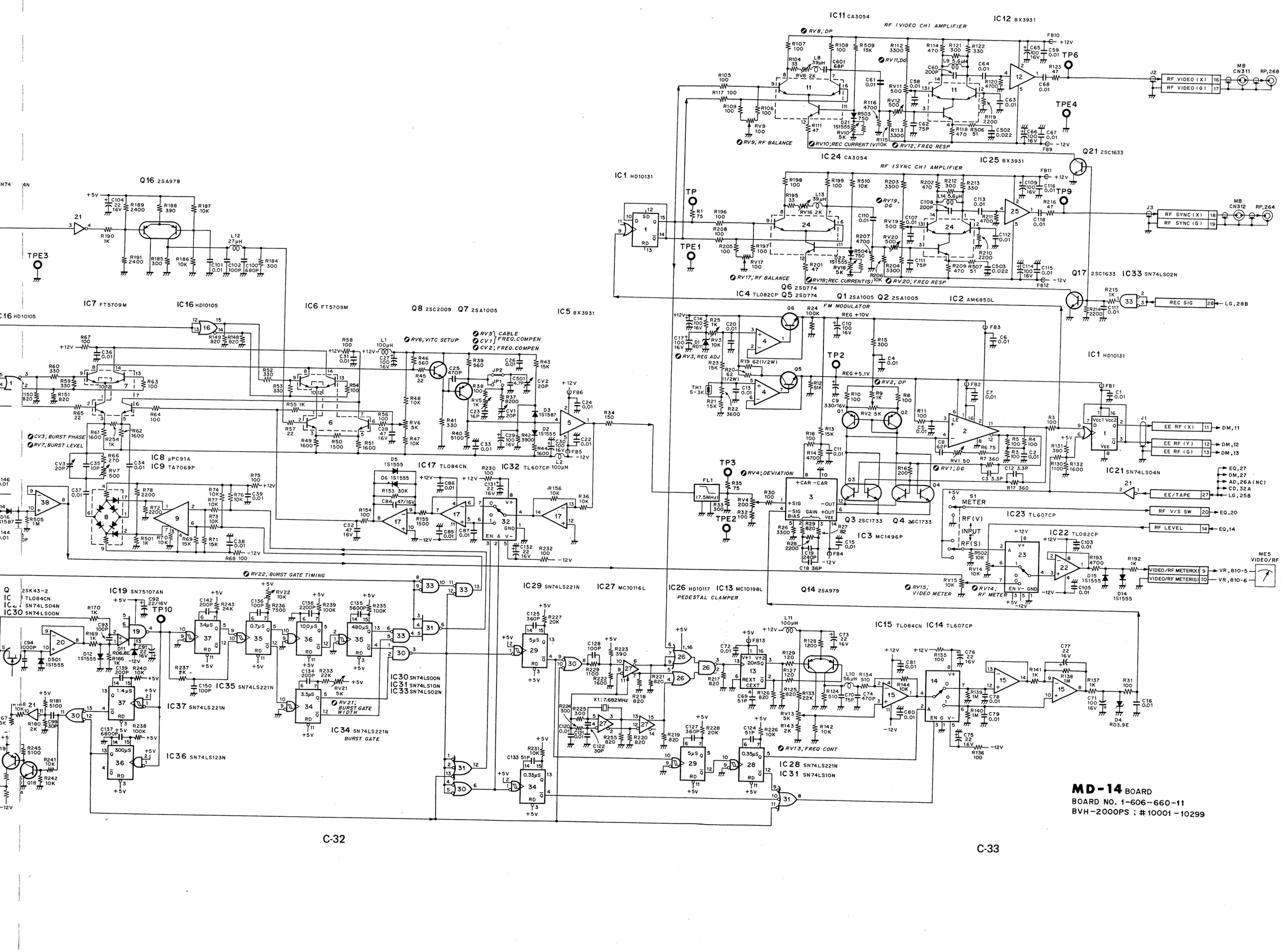

MD-14 BOARD
BOARD NO. 1-606-660-11
BVH-2000PS ; # 10001 - 10299

MD-14 BOARD (1-606-660-13)

Component Side

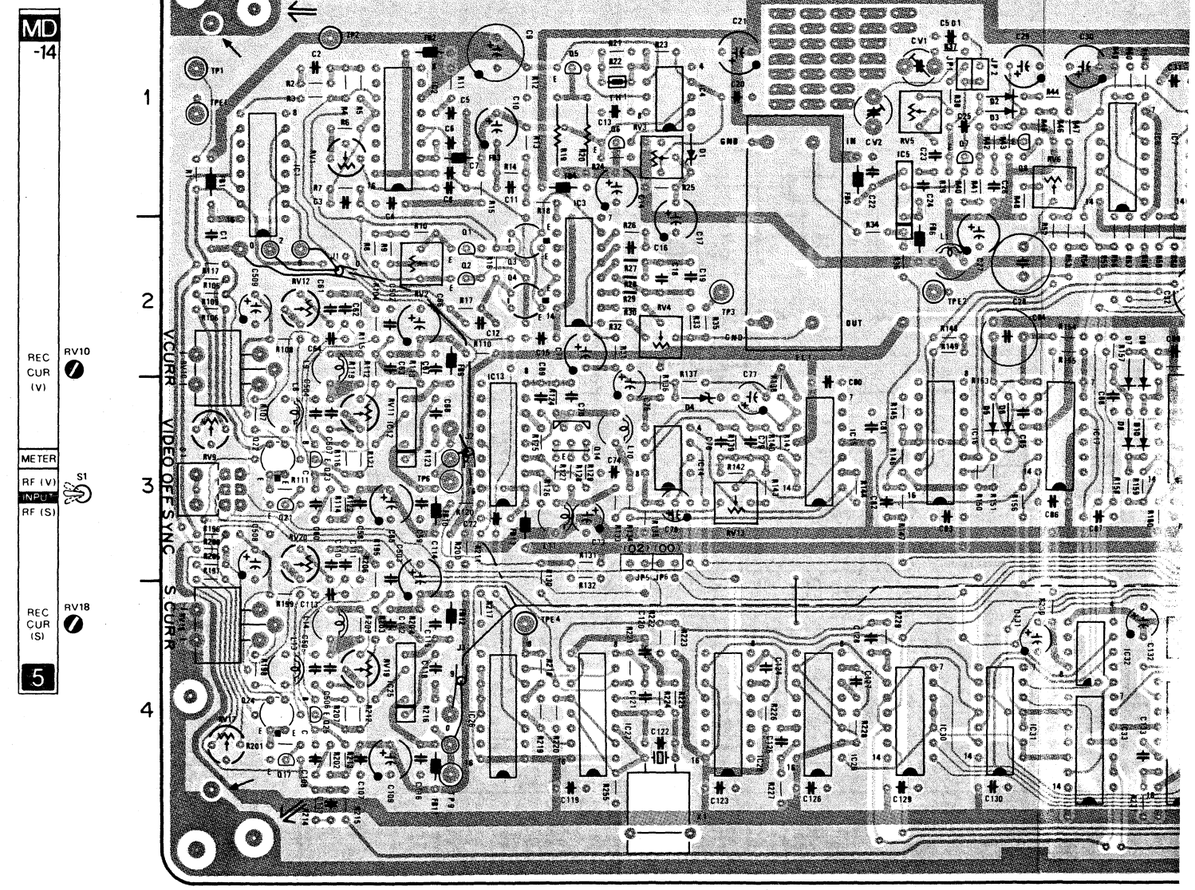

1-606-660-13 COMPONENT SIDE

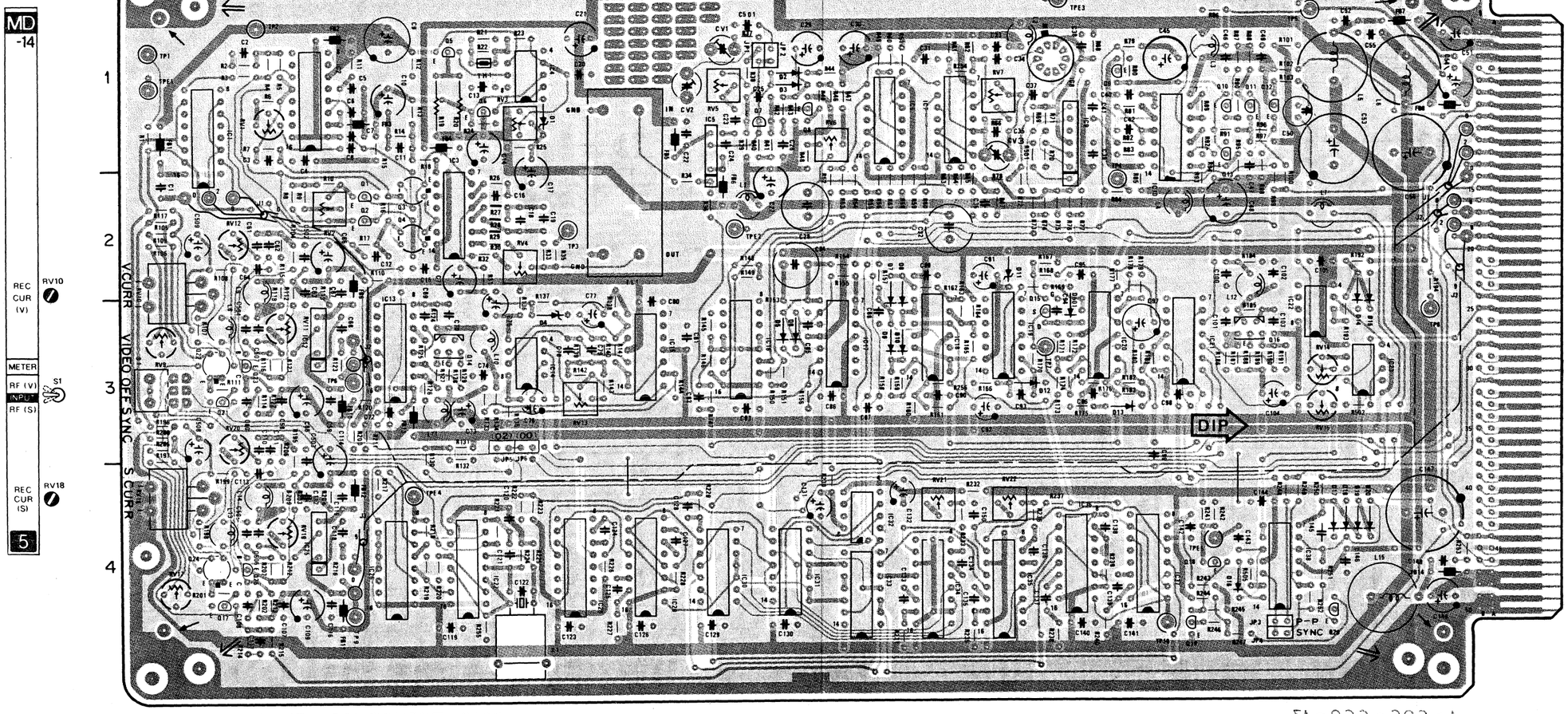

MD-14 (1-606-660-13 & UP)

BVH-2000(J,U/C)
BVH-2000PS
BVH-2000PM

CV1	1G	Q1	2C
CV2	1G	Q2	2C
CV3	1K	Q3	2C
		Q4	2C
(PS)		Q5	1D
CV4	3B	Q6	1D
		Q7	1H
D1	1E	Q8	1E
D2	1H	Q9	1M
D3	1H	Q10	1N
D4	3E	Q11	1N
D5	3H	Q12	1N
D6	3H	Q13	1N
D7	3J	Q14	3D
D8	3J	Q15	3L
D9	3J	Q16	3N
D10	3J	Q17	4B
D11	2K	Q18	4N
D12	3L	Q19	4M
D13	3M	Q20	4P
D14	3P	Q21	3B
D15	3P	Q22	3A
D16	4N	Q23	3B
D17	4P	Q24	4A
D18	4P	Q25	4B
D19	4P		
D20	4P	RV1	1B
D501	3L	RV2	2C
		RV3	1E
IC1	1A	RV4	2E
IC2	1B	RV5	1G
IC3	2D	RV6	1J
IC4	1E	RV7	1K
IC5	1G	RV9	3A
IC6	1J	RV10	2A
IC7	1K	RV11	3B
IC8	1L	RV12	2B
IC9	1L	RV13	3E
IC10	1M	RV14	3P
IC12	3C	RV15	3P
IC13	3C	RV17	4A
IC14	3E	RV18	4A
IC15	3F	RV19	4B
IC16	3G	RV20	3B
IC17	3J	RV21	4K
IC18	3K	RV22	4K
IC19	3K	RV23	1G
IC20	3M		
IC21	3M	S1	3A
IC22	3P		
IC23	3P	TH1	1D
IC25	4C		
IC26	4C	TP1	1A
IC27	4D	TP2	1B
IC28	4E	TP3	2E
IC29	4F	TP4	2M
IC30	4G	TP5	1P
IC31	4H	TP6	3C
IC32	4J	TP7	3L
IC33	4J	TP8	3Q
IC34	4K	TP9	4C
IC35	4K	TP10	4M
IC36	4L		
IC37	4M	TPE1	1A
IC38	4N	TPE2	2G
		TPE3	1L
JP1	1H	TPE4	4C
JP2	1H	TPE5	4N
JP3	4N		
JP4	4N	X1	4E
JP5	3E		
JP6	3E		

MD-14 BOARD

Video Modulator

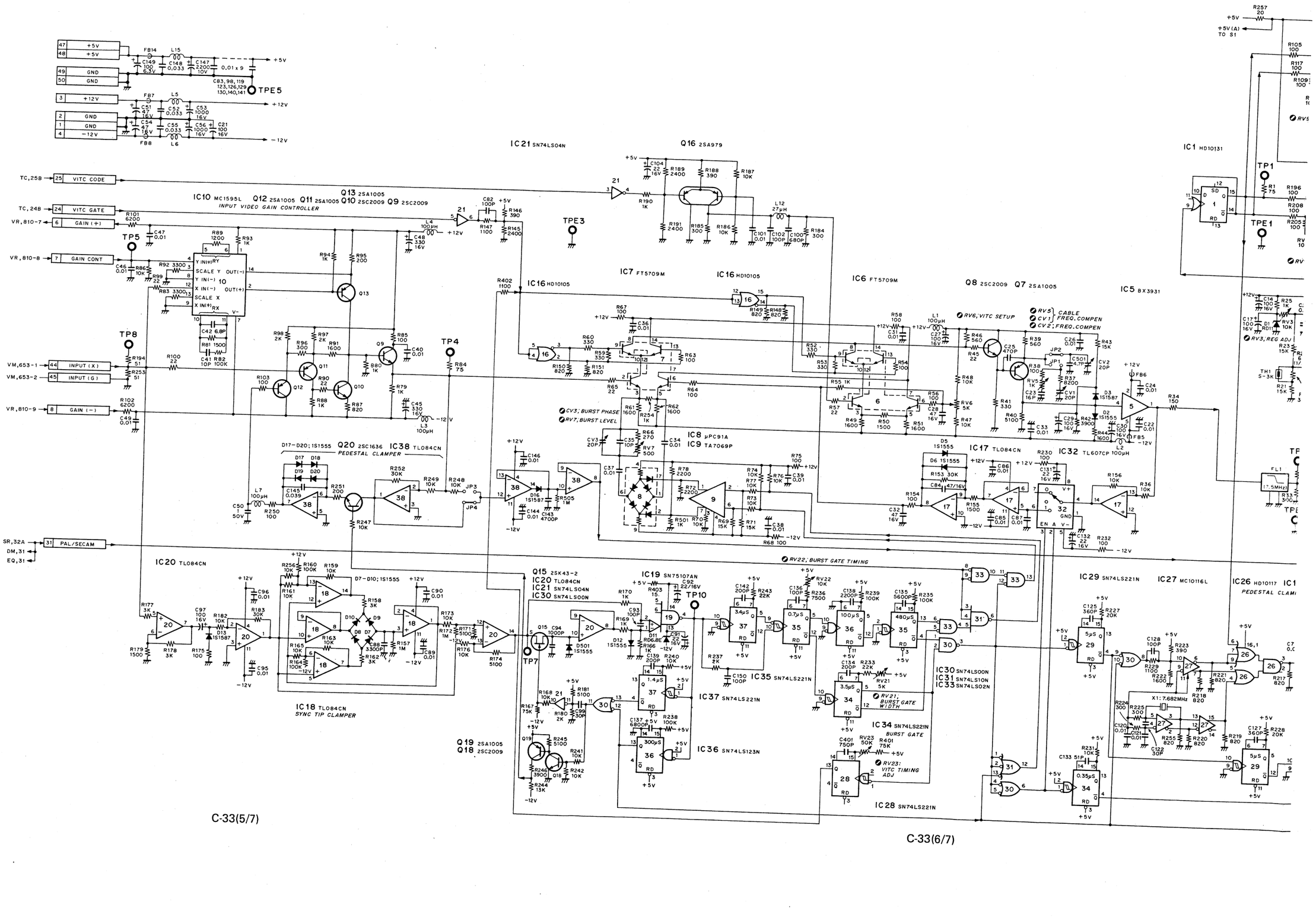

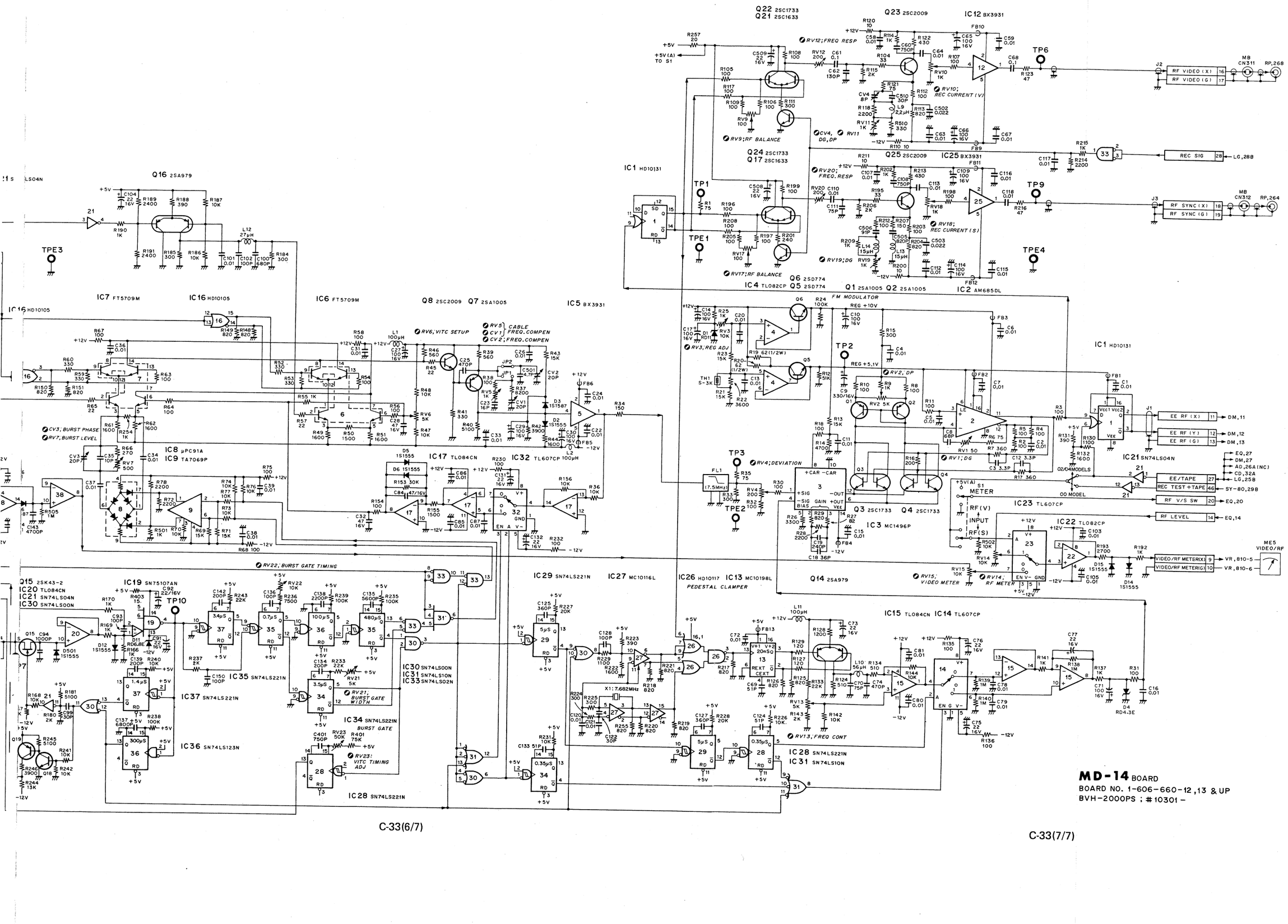

MD-14 BOARD
BOARD NO. 1-606-660-12,13 & UP
BVH-2000PS ; # 10301 -

C-33(6/7)

C-33(7/7)

J; #10001 – 12299
U/C; #10001 – 12499
PS; #10001 – 12299
PM; #10001 – 10199

LG-02 BOARD (1-606-682-13)

Component Side

BVH-2000PS

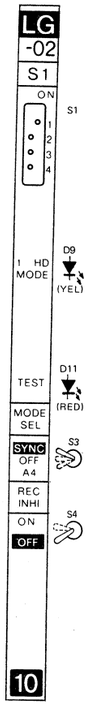

BVH-2000(J, U/C)
BVH-2000PM

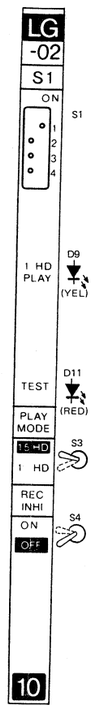

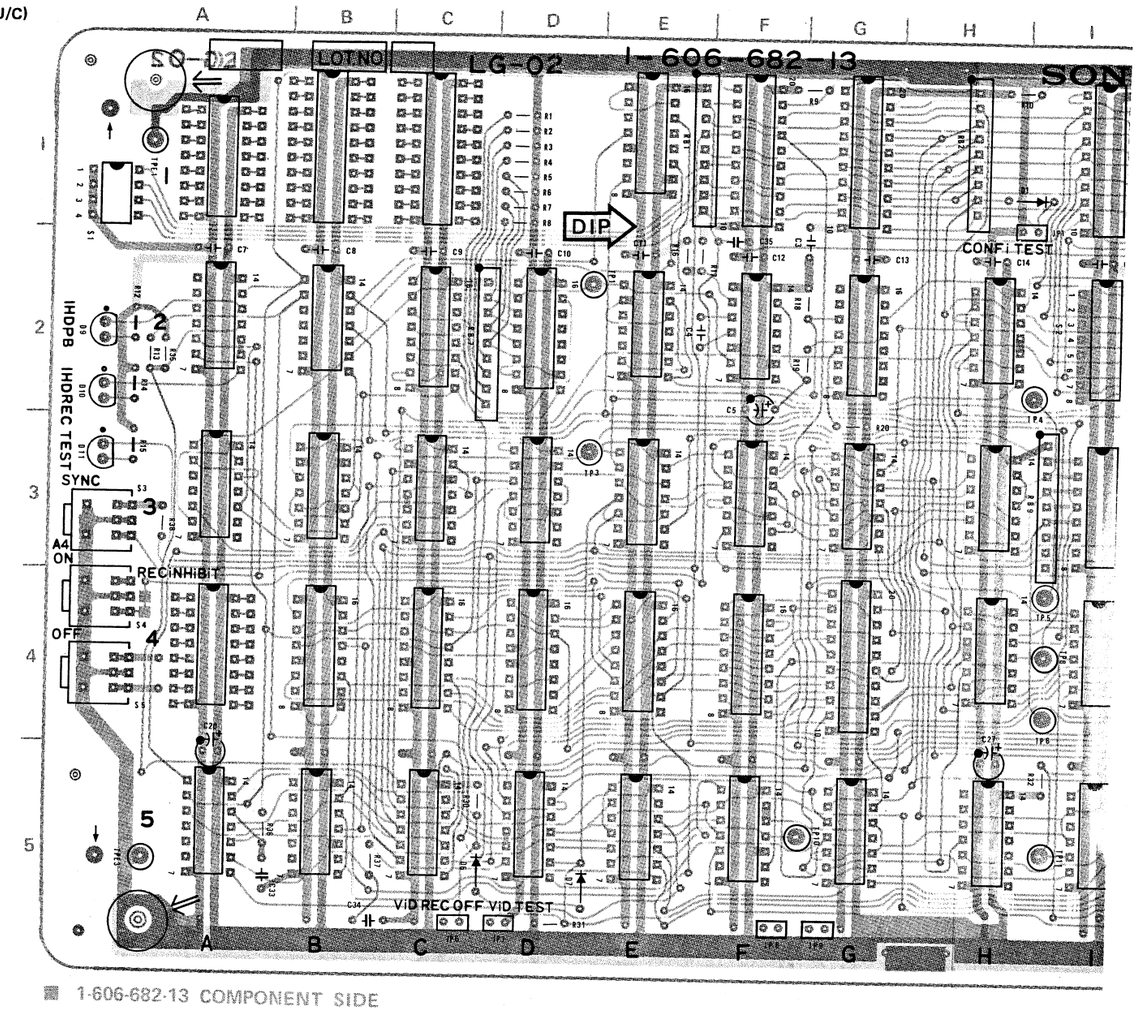

■ 1-606-682-13 COMPONENT SIDE

RB1, 2, 3, 4, 5, 6, 7, 8, 9

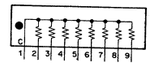

J; #10001 – 12299
U/C; #10001 – 12499
PS; #10001 – 12299
PM; #10001 – 10199

J; #10001 – 12299
U/C; #10001 – 12499
PS; #10001 – 12299
PM; #10001 – 10199

CARD RACK **LG-02** **LG-02** CARD RACK

J; #10001 – 12299
U/C; #10001 – 12499
PS; #10001 – 12299
PM; #10001 – 10199

/H-2000PS

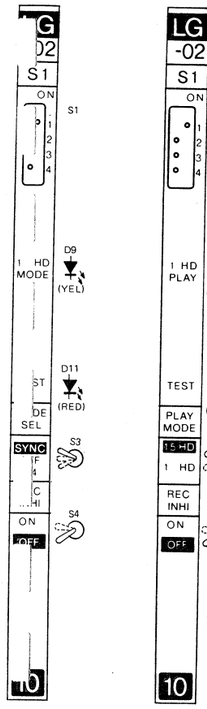

BVH-2000(J, U/C)
BVH-2000PM

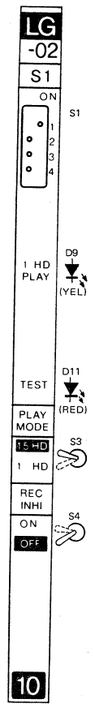

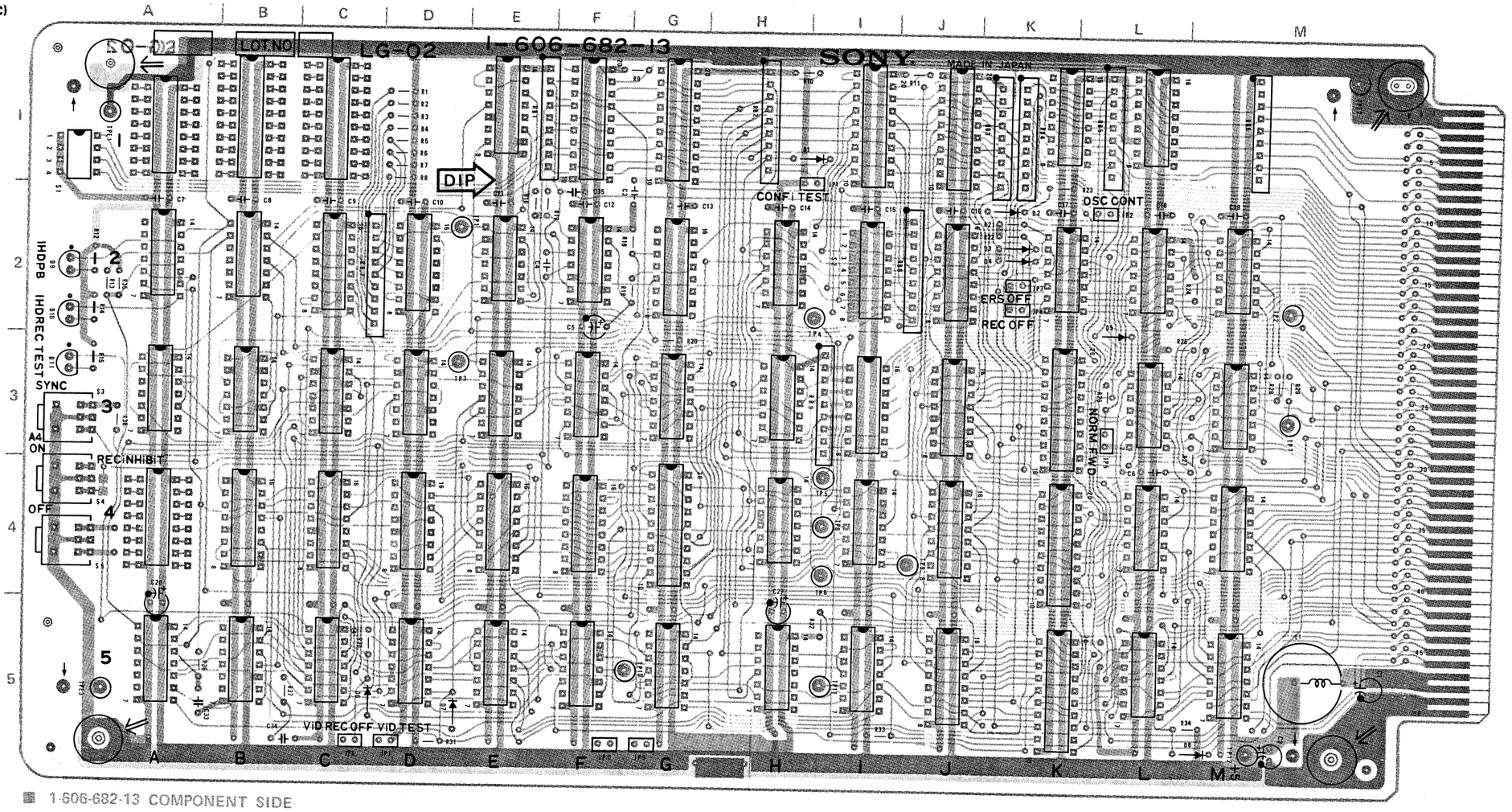

■ 1-606-682-13 COMPONENT SIDE

RB1, 2, 3, 4, 5, 6, 7, 8, 9

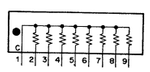

LG-02 (1-606-682-13)

BVH-2000(J,U/C)
BVH-2000PS
BVH-2000PM

D1	1H	JP1	1H
D2	2K	JP2	2L
D3	2K	JP3	2K
D4	2K	JP4	2K
D5	2L	JP5	3L
D6	5C	JP6	5C
D7	5D	JP7	5D
D8	5M	JP8	5F
D9	2A	JP9	5G
D11	3A		
		RB1	1E
IC1E		RB2	1H
IC1F		RB3	1K
IC1G		RB4	1K
IC1I		RB5	1L
IC1J		RB6	1M
IC1K		RB7	2C
IC1L		RB8	2J
IC2A		RB9	3I
IC2B			
IC2C		S1	1A
IC2D		S2	2I
IC2E		S3	3A
IC2F		S4	4A
IC2G			
IC2H		TP1	2D
IC2J		TP2	2M
IC2K		TP3	3D
IC2L		TP4	2I
IC2M		TP5	4I
IC3A		TP6	4I
IC3B		TP7	3M
IC3C		TP8	4I
IC3D		TP9	4J
IC3E		TP10	5F
IC3F		TP11	5I
IC3G		TP12	5M
IC3H			
IC3I		TPE1	1A
IC3J		TPE2	1M
IC3K		TPE3	5A
IC3L			
IC3M			
IC4B			
IC4C			
IC4D			
IC4E			
IC4F			
IC4G			
IC4H			
IC4I			
IC4J			
IC4K			
IC4L			
IC4M			
IC5A			
IC5B			
IC5C			
IC5D			
IC5E			
IC5F			
IC5G			
IC5H			
IC5I			
IC5J			
IC5K			
IC5L			
IC5M			

■ 1-606-682-13

J; #10001 – 12299
U/C; #10001 – 12499
PS; #10001 – 12299
PM; #10001 – 10199

CARD RACK **LG-02**

LG-02 CARD RACK

J; #10001 – 12299
U/C; #10001 – 12499
PS; #10001 – 12299
PM; #10001 – 10199

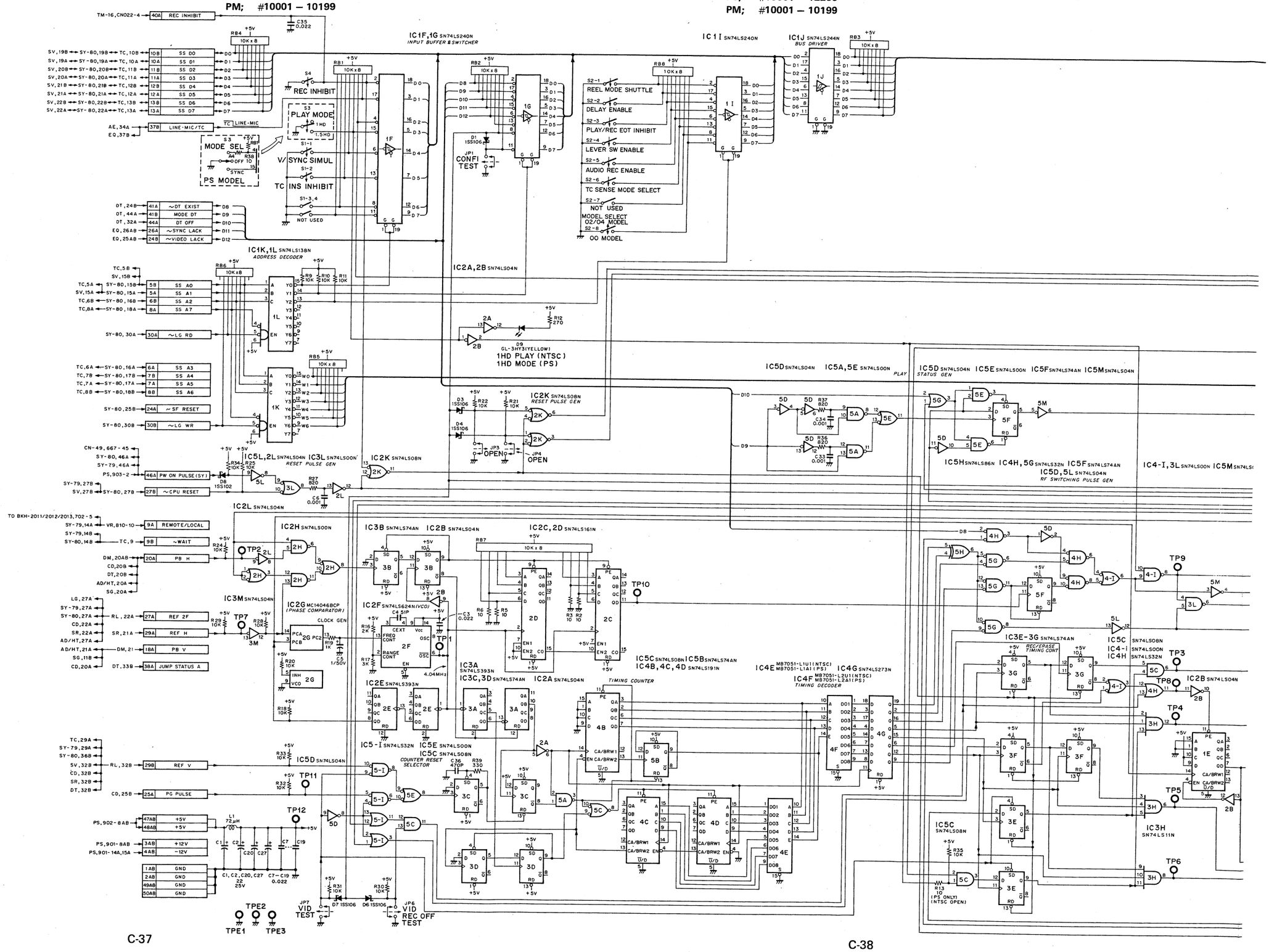

J; #10001 – 12299
U/C; #10001 – 12499
PS; #10001 – 12299
PM; #10001 – 10199

J; #10001 – 12299
U/C; #10001 – 12499
PS; #10001 – 12299
PM; #10001 – 10199

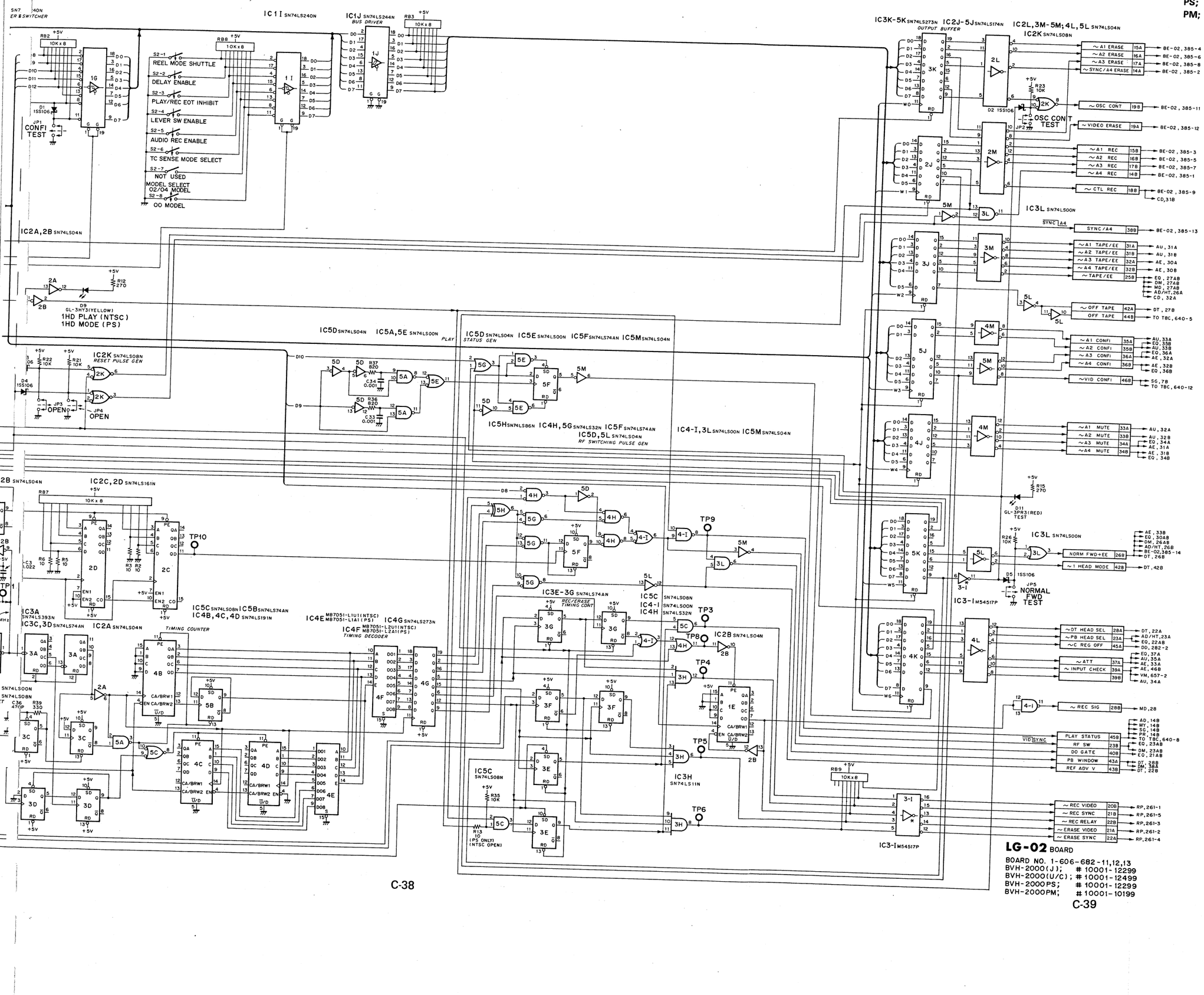

LG-02 BOARD

BOARD NO. 1-606-682-11,12,13
BVH-2000(J); # 10001-12299
BVH-2000(U/C); # 10001-12499
BVH-2000PS; # 10001-12299
BVH-2000PM; # 10001-10199

J; #22301 –
U/C; #22501 –
PS; #22301 –
PM; #20201 –

J; #22301 –
U/C; #22501 –
PS; #22301 –
PM; #20201 –

LG-02(A) BOARD (1-606-682-13)

Component Side

BVH-2000PS

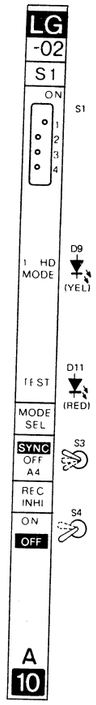

BVH-2000(J, U/C)
BVH-2000PM

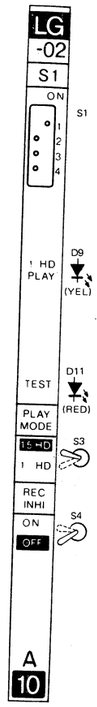

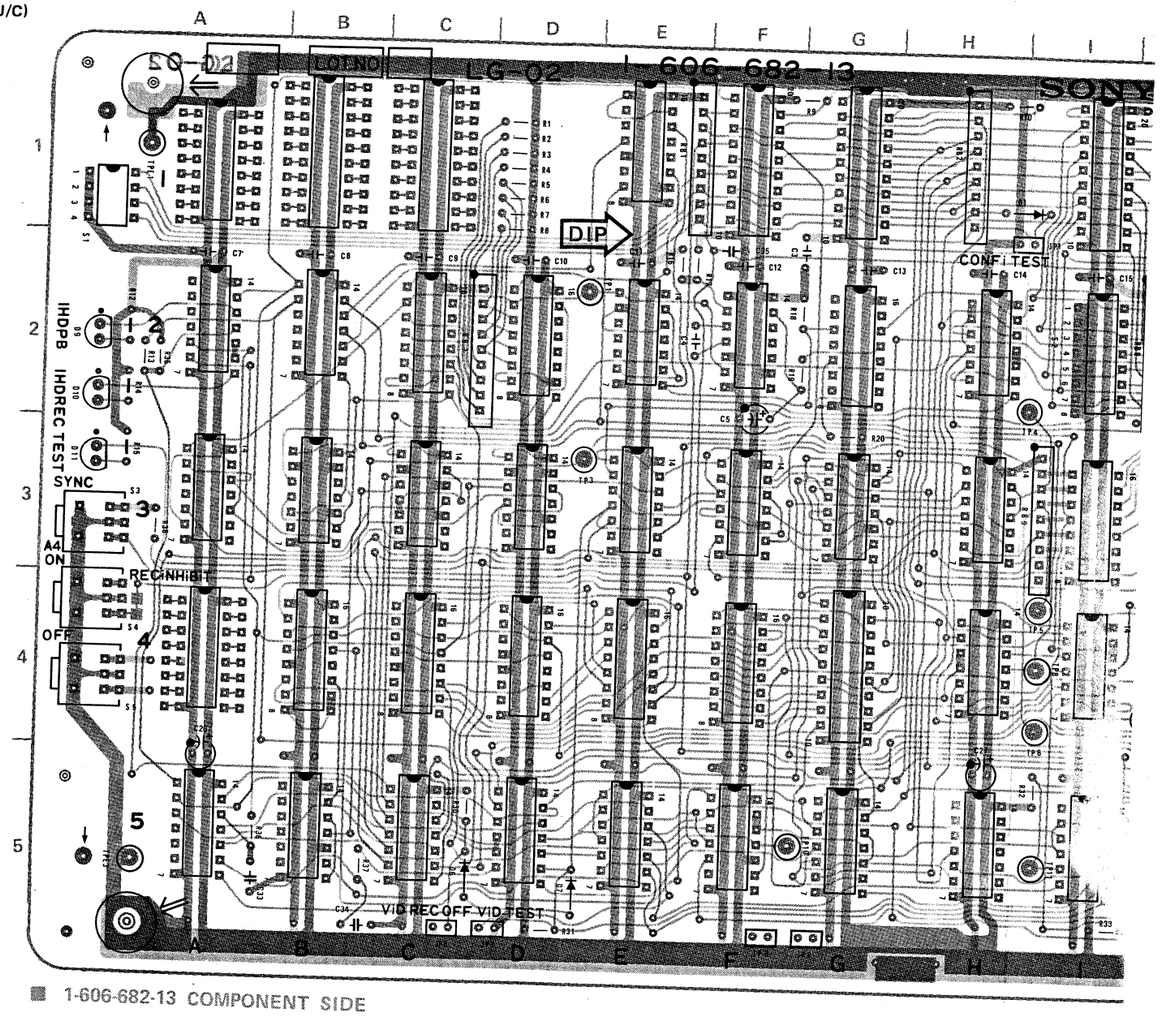

■ 1-606-682-13 COMPONENT SIDE

RB1, 2, 3, 4, 5, 6, 7, 8, 9

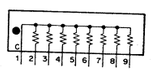

J; #22301 –
U/C; #22501 –
PS; #22301 –
PM; #20201 –

CARD RACK **LG-02(A)**

LG-02(A) CARD RACK

J; #22301 –
U/C; #22501 –
PS; #22301 –
PM; #20201 –

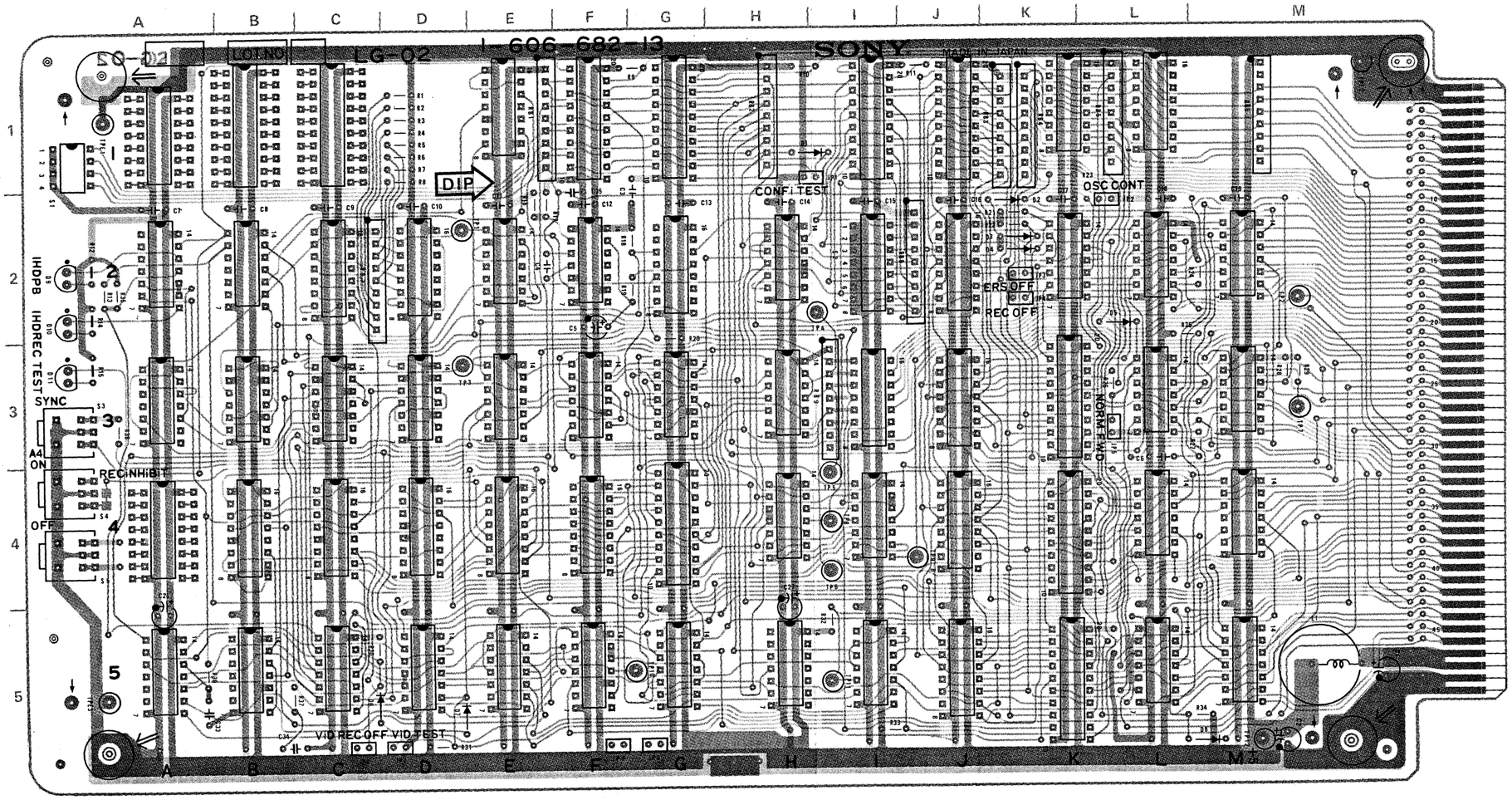

■ 1-606-682-13 COMPONENT SIDE

■ 1-606-682-13

LG-02(A) (1-606-682-13 & UP)

BVH-2000(J,U/C)
BVH-2000PS
BVH-2000PM

D1	1H	JP1	1H
D2	2K	JP2	2L
D3	2K	JP3	2K
D4	2K	JP4	2K
D5	2L	JP5	3L
D6	5C	JP6	5C
D7	5D	JP7	5D
D8	5M	JP8	5F
D9	2A	JP9	5G
D11	3A		
		RB1	1E
IC1E		RB2	1H
IC1F		RB3	1K
IC1G		RB4	1K
IC1I		RB5	1L
IC1J		RB6	1M
IC1K		RB7	2C
IC1L		RB8	2J
IC2A		RB9	3I
IC2B			
IC2C		S1	1A
IC2D		S2	2I
IC2E		S3	3A
IC2F		S4	4A
IC2G			
IC2H		TP1	2D
IC2J		TP2	2M
IC2K		TP3	3D
IC2L		TP4	2I
IC2M		TP5	4I
IC3A		TP6	4I
IC3B		TP7	3M
IC3C		TP8	4I
IC3D		TP9	4J
IC3E		TP10	5F
IC3F		TP11	5I
IC3G		TP12	5M
IC3H			
IC3I		TPE1	1A
IC3J		TPE2	1M
IC3K		TPE3	5A
IC3L			
IC3M			
IC4B			
IC4C			
IC4D			
IC4E			
IC4F			
IC4G			
IC4H			
IC4I			
IC4J			
IC4K			
IC4L			
IC4M			
IC5A			
IC5B			
IC5C			
IC5D			
IC5E			
IC5F			
IC5G			
IC5H			
IC5I			
IC5J			
IC5K			
IC5L			
IC5M			

RB1, 2, 3, 4, 5, 6, 7, 8, 9

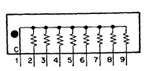

LG-02(A) BOARD

Logic

J; #22301 –
U/C; #22501 –
PS; #22301 –
PM; #20201 –

CARD RACK **LG-02(A)**

LG-02(A) CARD RACK

J; #22301 –
U/C; #22501 –
PS; #22301 –
PM; #20201 –

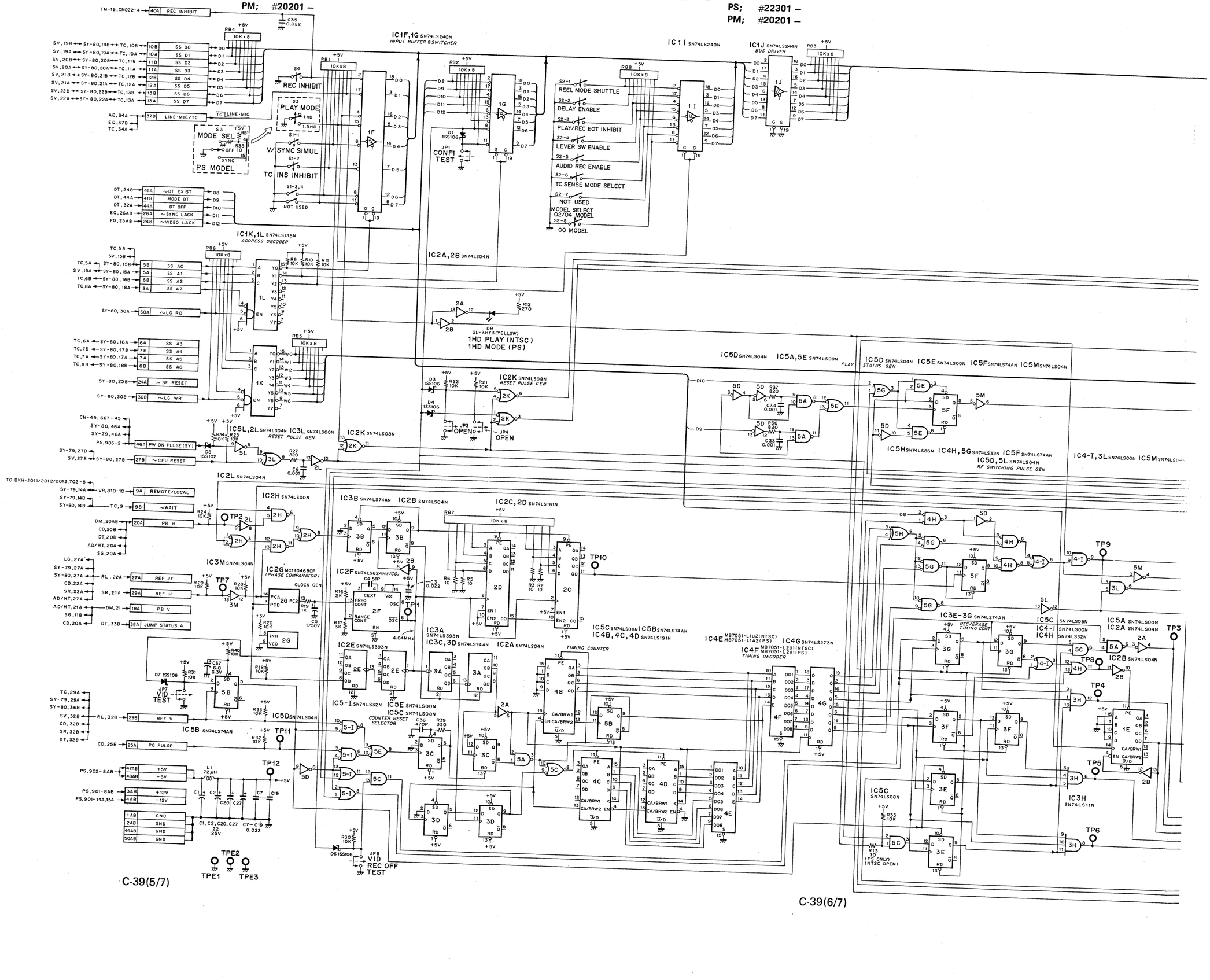

J; #22301 –
U/C; #22501 –
PS; #22301 –
PM; #20201 –

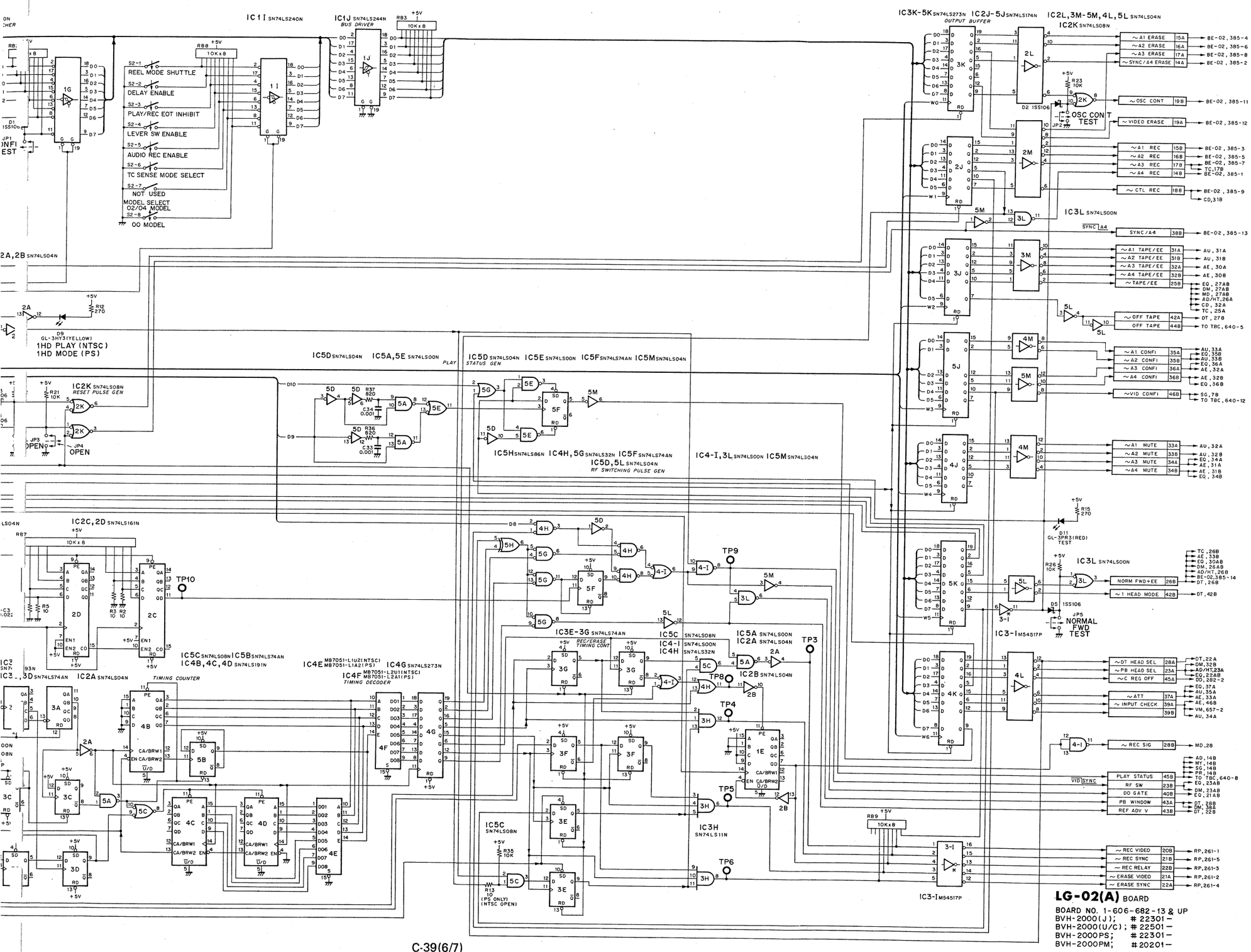

C-39(6/7)

LG-02(A) BOARD

BOARD NO. 1-606-682-13 & UP
BVH-2000(J); # 22301 –
BVH-2000(U/C); # 22501 –
BVH-2000PS; # 22301 –
BVH-2000PM; # 20201 –

C-39(7/7)

SY-79 BOARD (1-606-683-14)

Component Side

BVH-2500(J, U/C)

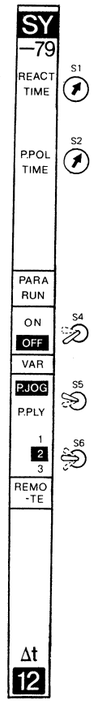

BVH-2000(J, U/C)
BVH-2000PS
(for 00 model)

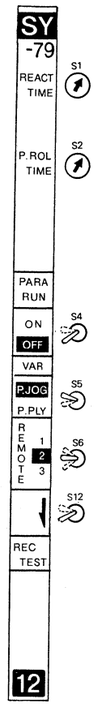

BVH-2000(J, U/C)
BVH-2000PS
BVH-2000PM
(for 02/04 models)

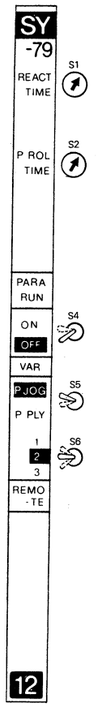

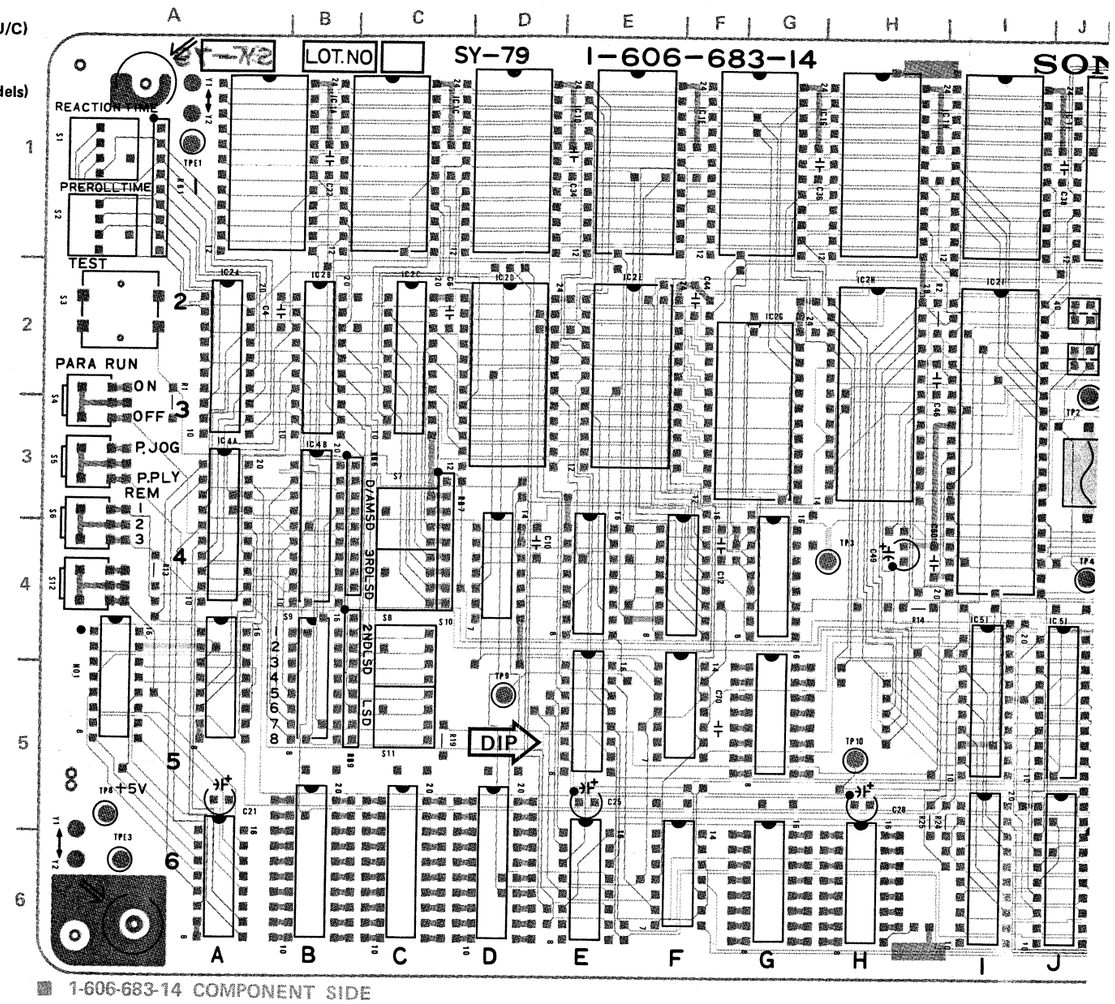

■ 1-606-683-14 COMPONENT SIDE

S1, 2

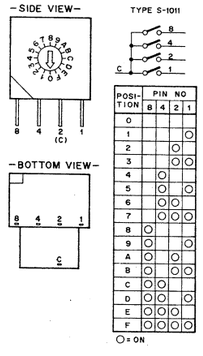

S7, 8, 10, 11

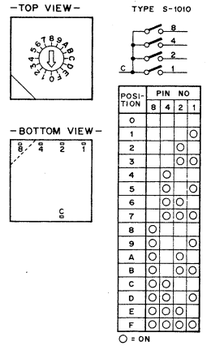

CP1, 2, 3

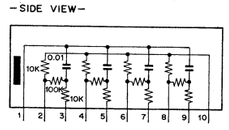

RB1, 2, 3, 5, 6, 7, 8, 9, 28, 29

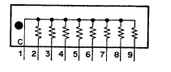

RB26, 27

U/C)

BVH-2000(J, U/C)
BVH-2000PS
BVH-2000PM
(for 02/04 models)

SY -79
REACT TIME S1
P ROL TIME S2
PARA RUN
ON OFF S4
VAR
P JOG S5
P PLY 1 2 3 S6
REMO -TE S12

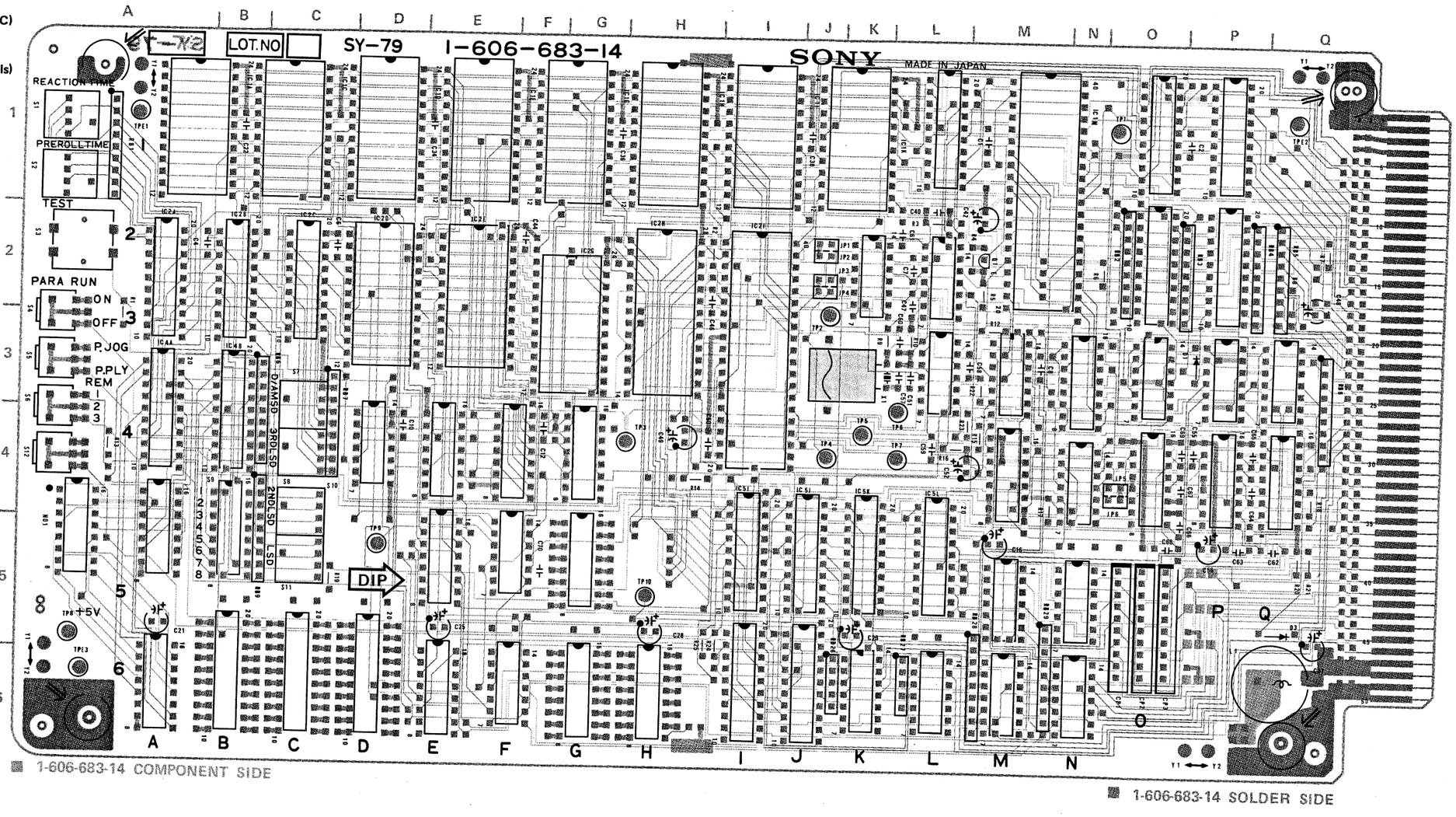

■ 1-606-683-14 COMPONENT SIDE

■ 1-606-683-14 SOLDER SIDE

SY-79 (1-606-683-14 & UP)

BVH-2000(J,U/C)
BVH-2000PS
BVH-2000PM
BVH-2500(J,U/C)

CP1	5O	IC6A	
CP2	5O	IC6B	
CP3	5P	IC6P	
		IC6I	
D1	3P	IC6J	
D3	5Q	IC6K	
		IC6L	
(BVH-2500)		IC6M	
IC1A		IC6N	
IC1C		JP1	2J
IC1D		JP2	2J
IC1E		JP3	2J
IC1G		JP4	2J
IC1H		JP5	4O
IC1I		JP6	4O
IC1K			
IC1L		ND1	5A
IC1M			
IC1O		Q1	2M
IC1P			
IC2A		RB1	1A
IC2B		RB2	2O
IC2C		RB3	2P
IC2D		RB5	2Q
IC2E		RB6	4C
IC2H		RB7	4C
IC2I		RB8	3Q
IC2K		RB9	5C
IC2L		RB26	6K
IC2O		RB27	6L
IC2P		RB28	6M
IC3L		RB29	6M
IC3M			
IC3N		S1	1A
IC3O		S2	1A
IC3P		S3	2A
IC3Q		S4	3A
IC4A		S5	3A
IC4B		S6	4A
IC4D		S7	4C
IC4E		S8	4C
IC4F		S9	5B
		S10	5C
(BVH-2500)		S11	5C
IC4G			
		(00 MODEL)	
IC4M		S12	4A
IC4N			
IC4O		TP1	1Q
IC4P		TP2	2J
IC4Q		TP3	4H
IC5A		TP4	4J
IC5E		TP5	4K
IC5F		TP6	4L
IC5I		TP7	4L
IC5J		TP8	5A
IC5K		TP9	5D
IC5L		TP10	5H
IC5M			
IC5N		TPE1	1A
		TPE2	1Q
		TPE3	6A
		X1	3L

S1, 2

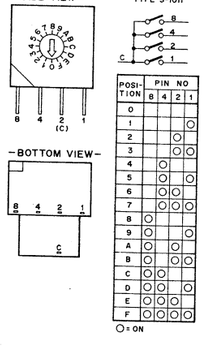

S7, 8, 10, 11

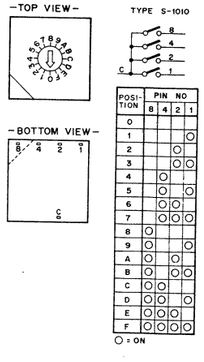

CP1, 2, 3

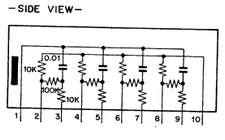

RB1, 2, 3, 5, 6, 7, 8, 9, 28, 29

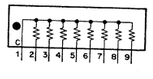

RB26, 27

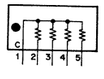

BVH-2000/PS/PM C-43 C-44 C-45

BVH-2500 C-79 C-80 C-81

SY-79 BOARD (1/2)

System Control CPU-1

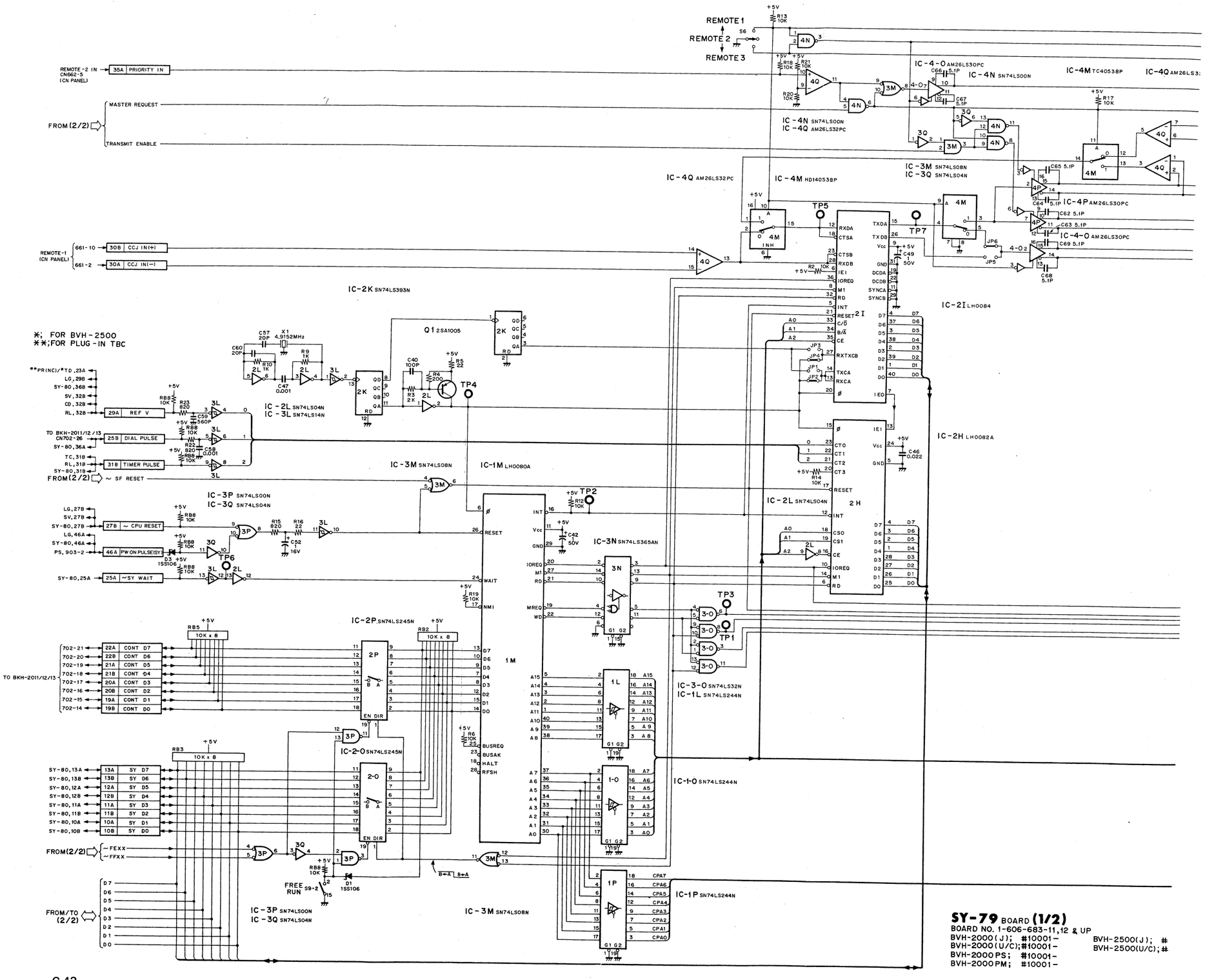

C-43

C-44

SY-79 BOARD (1/2)

BOARD NO. 1-606-683-11,12 & UP

BVH-2000(J); #10001-

BVH-2000(U/C);#10001-

BVH-2000PS; #10001-

BVH-2000PM; #10001-

BVH-2500(J); #

BVH-2500(U/C);#

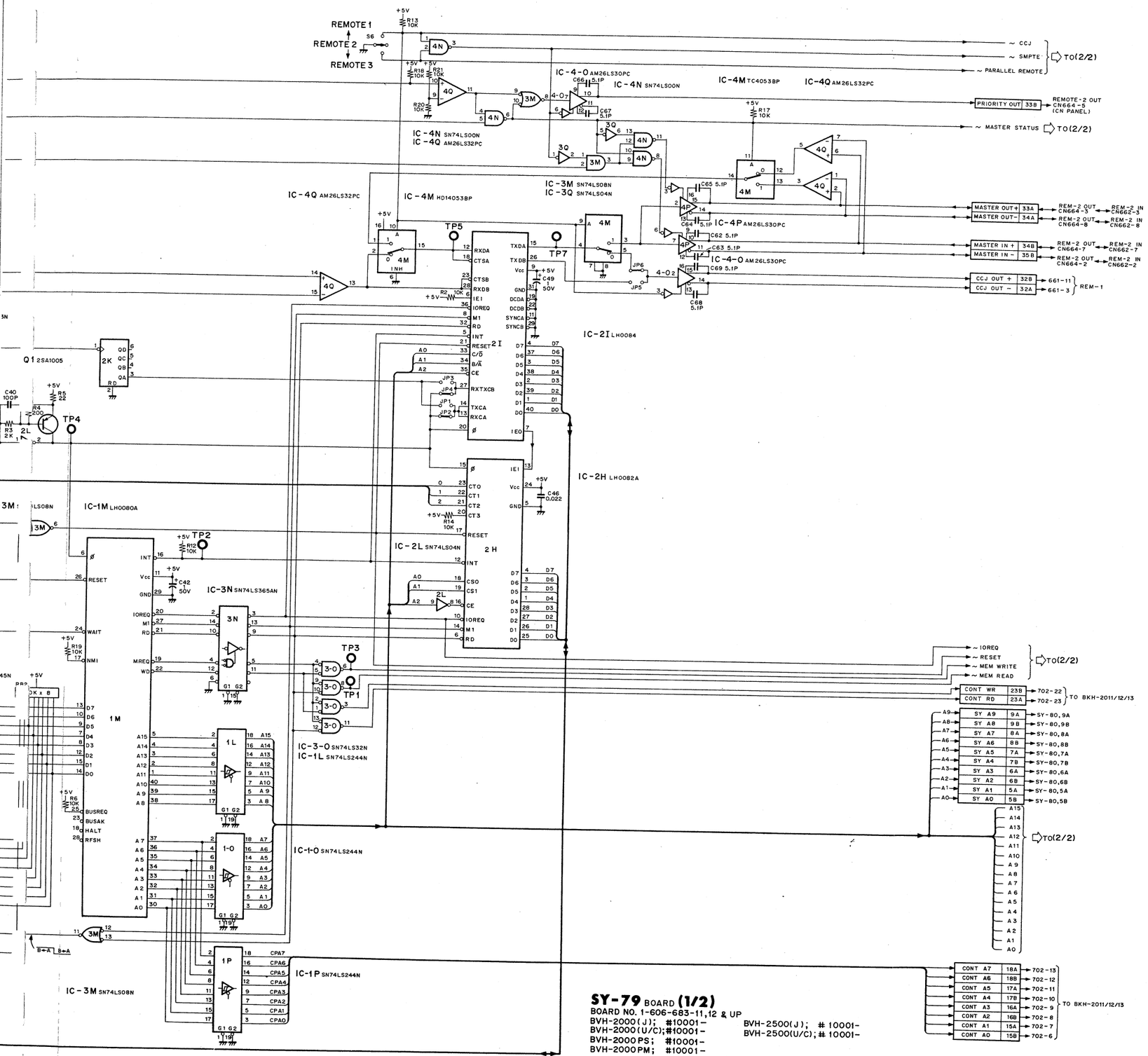

SY-79 BOARD **(1/2)**
BOARD NO. 1-606-683-11,12 & UP
BVH-2000(J); #10001-
BVH-2000(U/C);#10001-
BVH-2000PS; #10001-
BVH-2000PM; #10001-
BVH-2500(J); # 10001-
BVH-2500(U/C); # 10001-

SY-79 BOARD (2/2)

System Control CPU-1

CARD RACK **SY-79 (2/2)** SY-79 (2/2) CARD RACK

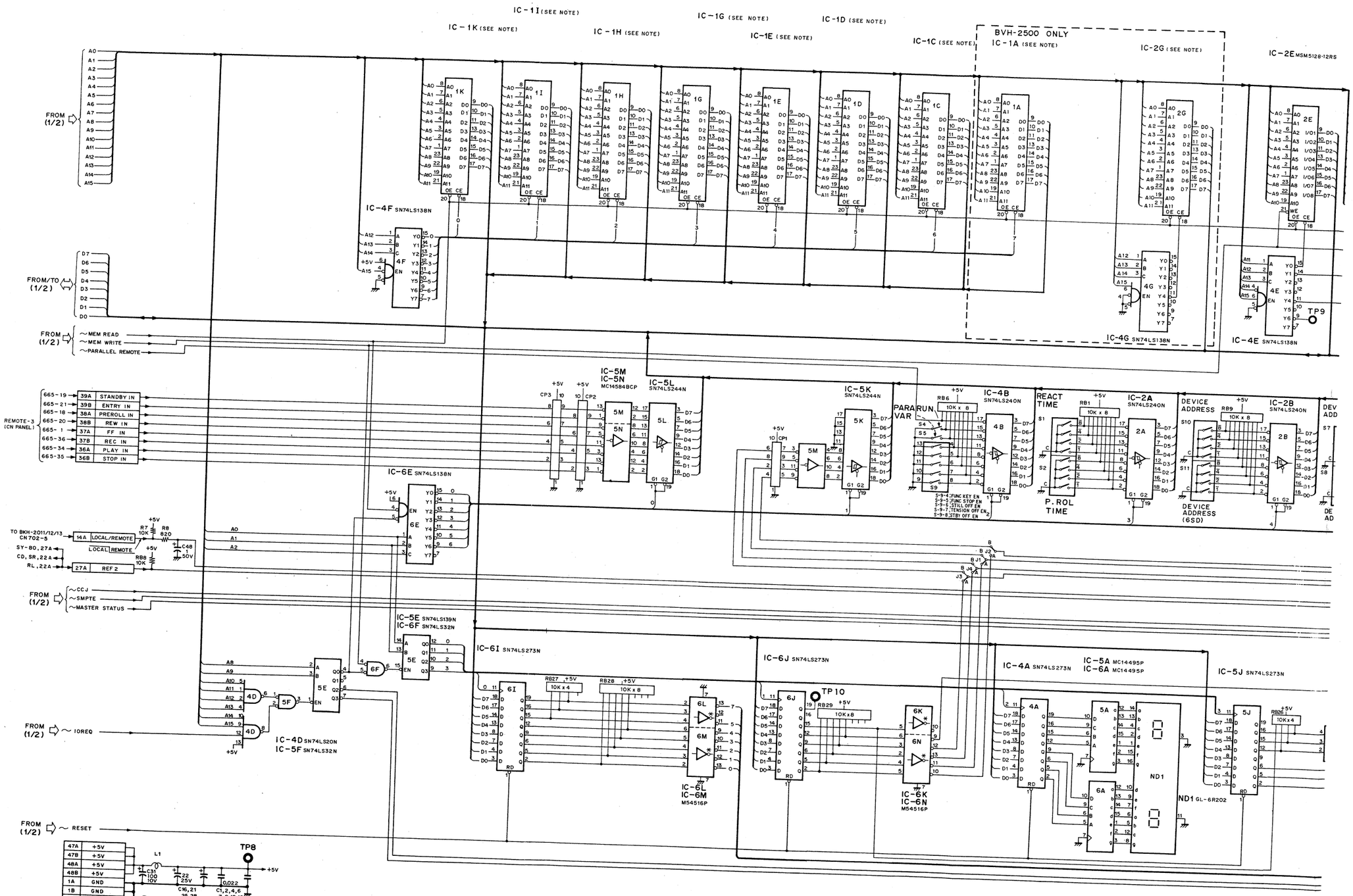

C-49

C-50

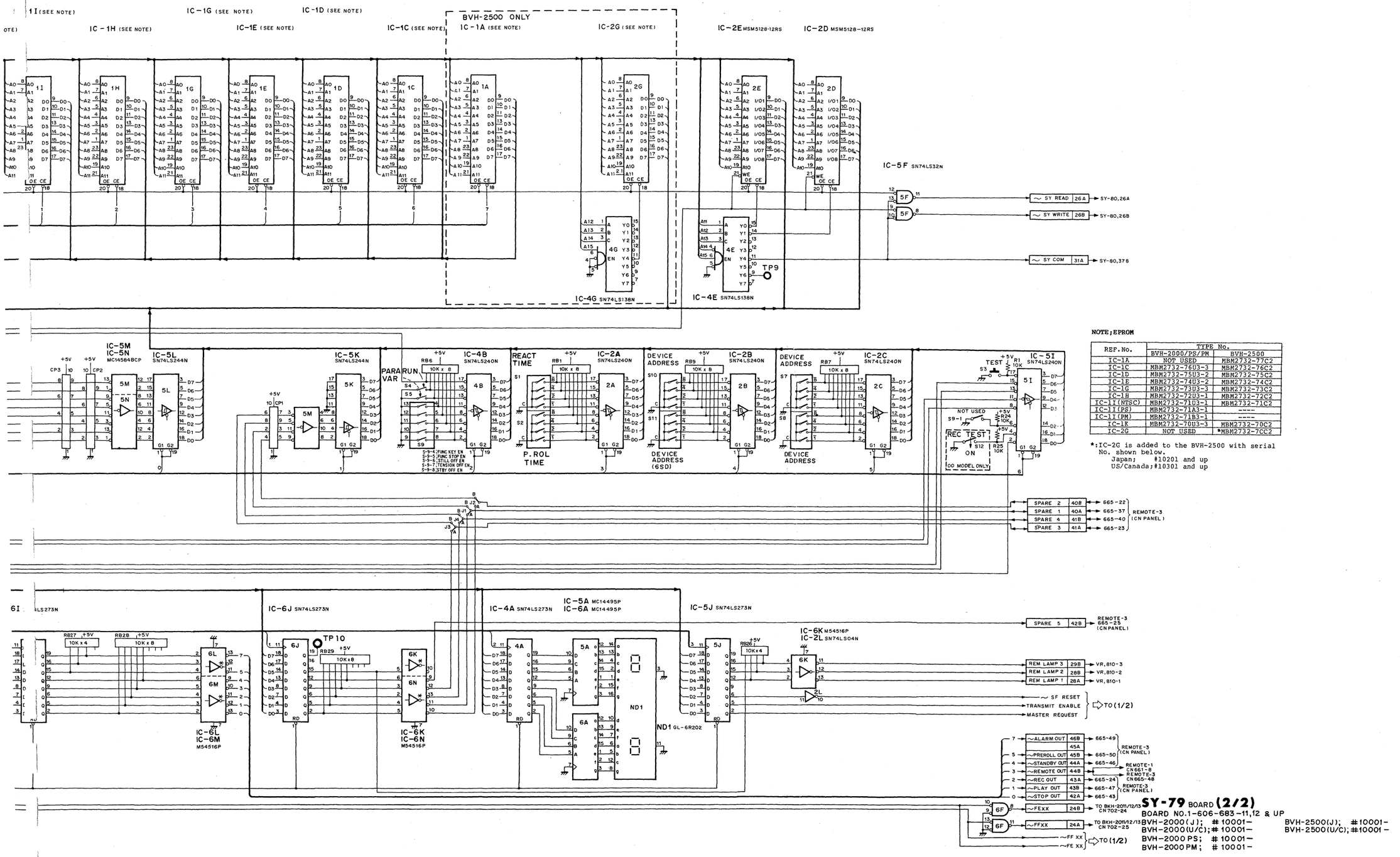

NOTE; EPROM

REF.No.	TYPE No. BVH-2000/PS/PM	BVH-2500
IC-1A	NOT USED	MBM2732-77C2
IC-1C	MBM2732-76U3-3	MBM2732-76C2
IC-1D	MBM2732-75U3-2	MBM2732-75C2
IC-1E	MBM2732-74U3-2	MBM2732-74C2
IC-1G	MBM2732-73U3-3	MBM2732-73C2
IC-1H	MBM2732-72U3-1	MBM2732-72C2
IC-1I(NTSC)	MBM2732-71U3-1	MBM2732-71C2
IC-1I(PS)	MBM2732-71A3-1	-----
IC-1I(PM)	MBM2732-71B3-1	-----
IC-1K	MBM2732-70U3-3	MBM2732-70C2
IC-2G	NOT USED	*MBM2732-7CC2

*:IC-2G is added to the BVH-2500 with serial No. shown below.
Japan; #10201 and up
US/Canada; #10301 and up

SY-79 BOARD (2/2)
BOARD NO.1-606-683-11,12 & UP
BVH-2000(J); #10001-
BVH-2000(U/C); #10001-
BVH-2000PS; #10001-
BVH-2000PM; #10001-
BVH-2500(J); #10001-
BVH-2500(U/C); #10001-

SY-80 BOARD (1-606-684-11)

Component Side

BVH-2000PS

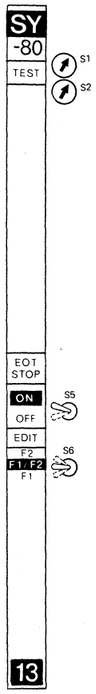

BVH-2000 (J, U/C)

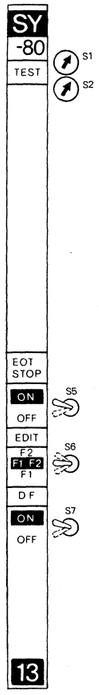

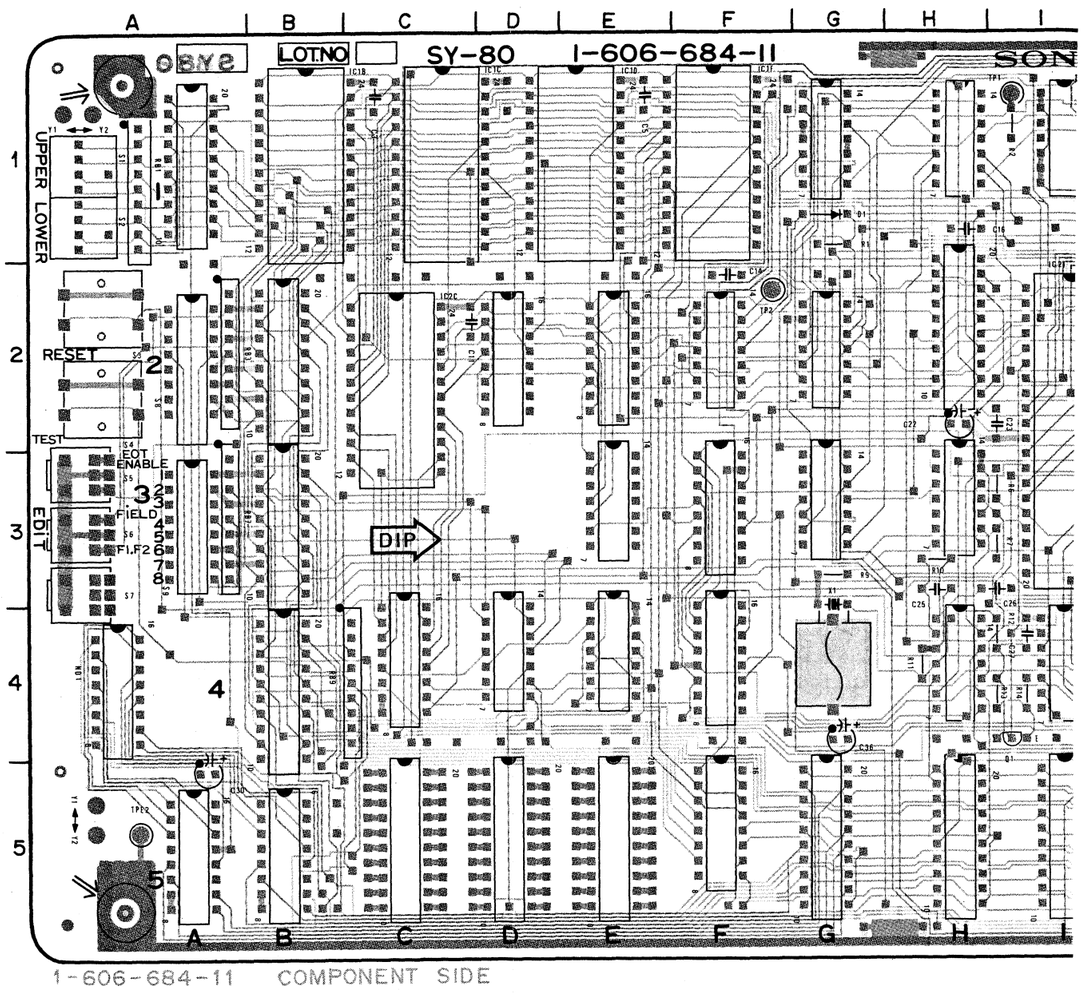

1-606-684-11 COMPONENT SIDE

S1, 2

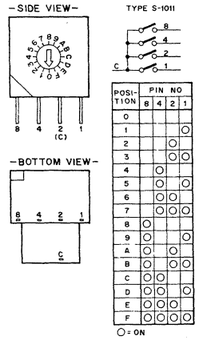

RB1, 2, 3, 4, 5, 6, 7, 8, 9

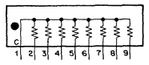

BVH-2000
(J, U/C)

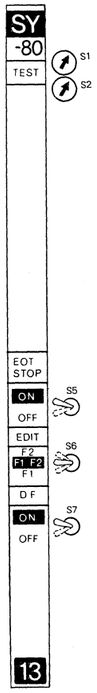

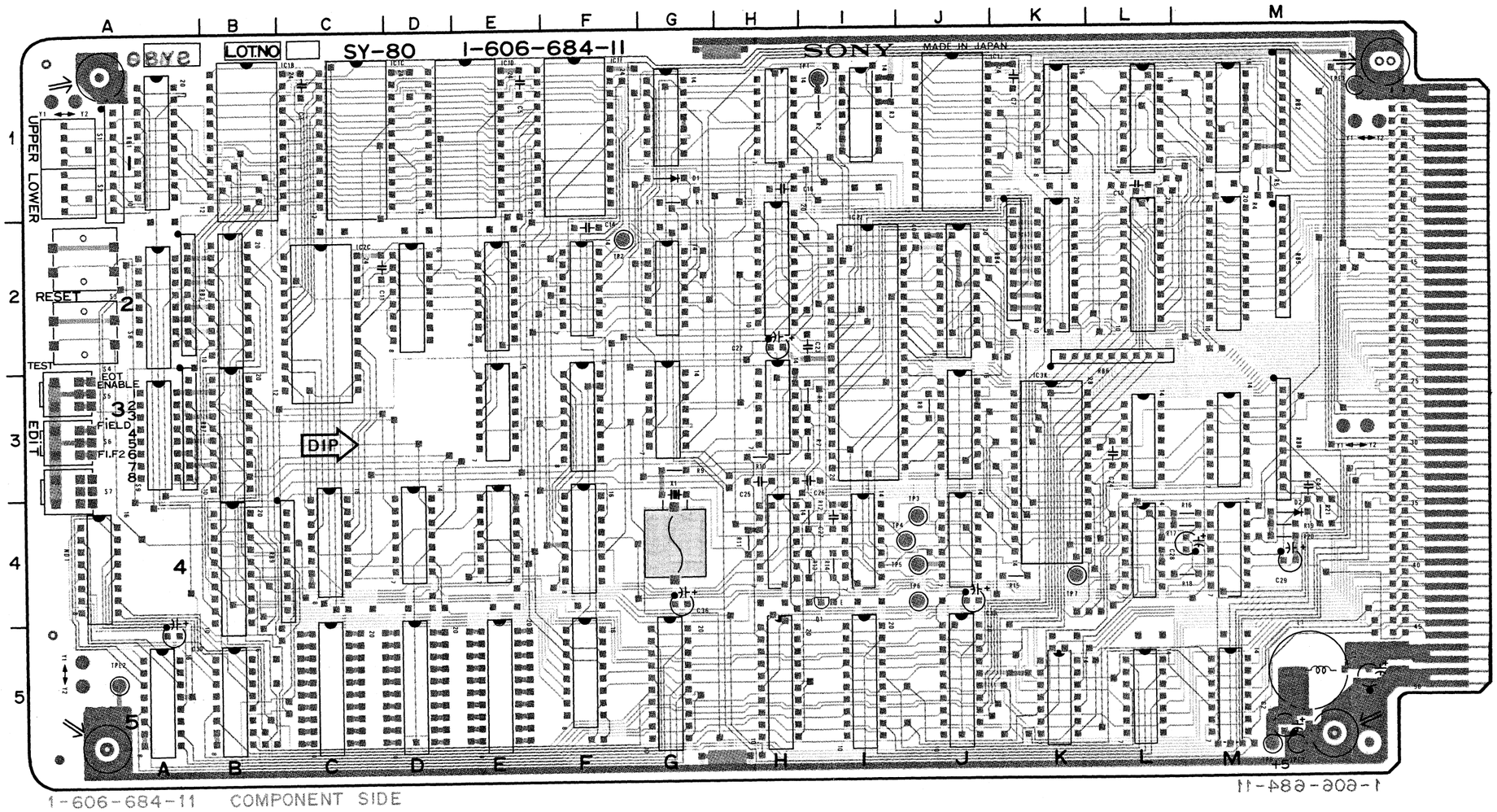

SY-80 (1-606-684-11)

BVH-2000(J,U/C)	ND1	4A	
BVH-2000PS	Q1	4I	
D1	1G	RB1	1A
D2	4M	RB2	1M
IC1A		RB3	2A
IC1B		RB4	2K
IC1D		RB5	2M
IC1F		RB6	2L
IC1G		RB7	3A
IC1H		RB8	3M
IC1I		RB9	4C
IC1J			
IC1K		S1	1A
IC1L		S2	1A
IC1M		S3	2A
IC2B		S4	2A
IC2D		S5	3A
IC2E		S6	3A
IC2F			
IC2G		(NTSC,PM)	
IC2H		S7	3A
IC2I			
IC2J		S8	2A
IC2K		S9	3A
IC2L			
IC2M		TP1	1I
IC3B		TP2	2F
IC3E		TP3	4J
IC3F		TP4	4J
IC3G		TP5	4J
IC3H		TP6	4J
IC3J		TP7	4K
IC3K		TP8	5M
IC3L			
IC3M		TPE1	1M
IC4B		TPE2	5A
IC4C		TPE3	5M
IC4D			
IC4E		X1	4F
IC4F			
IC4H			
IC4I			
IC4J			
IC4L			
IC4M			
IC5A			
IC5B			
IC5E			
IC5F			
IC5G			
IC5H			
IC5I			
IC5J			
IC5K			
IC5L			
IC5M			

S1, 2

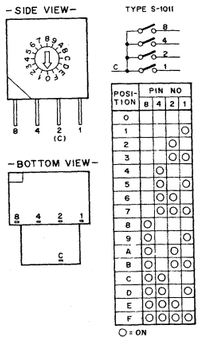

RB1, 2, 3, 4, 5, 6, 7, 8, 9

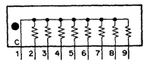

SY-80 BOARD

System Control CPU-2

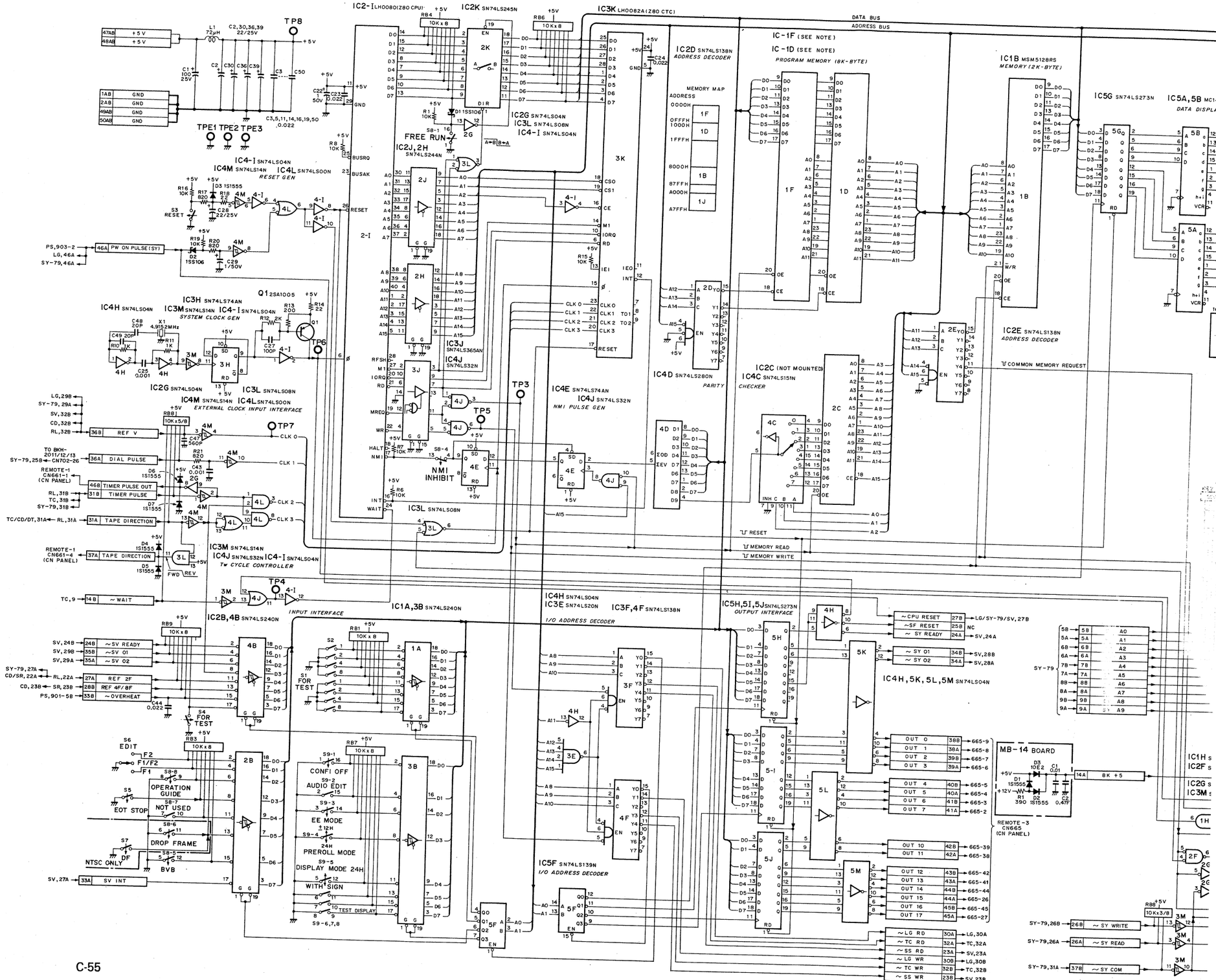

1-606-684-11 CARD RACK SY-80

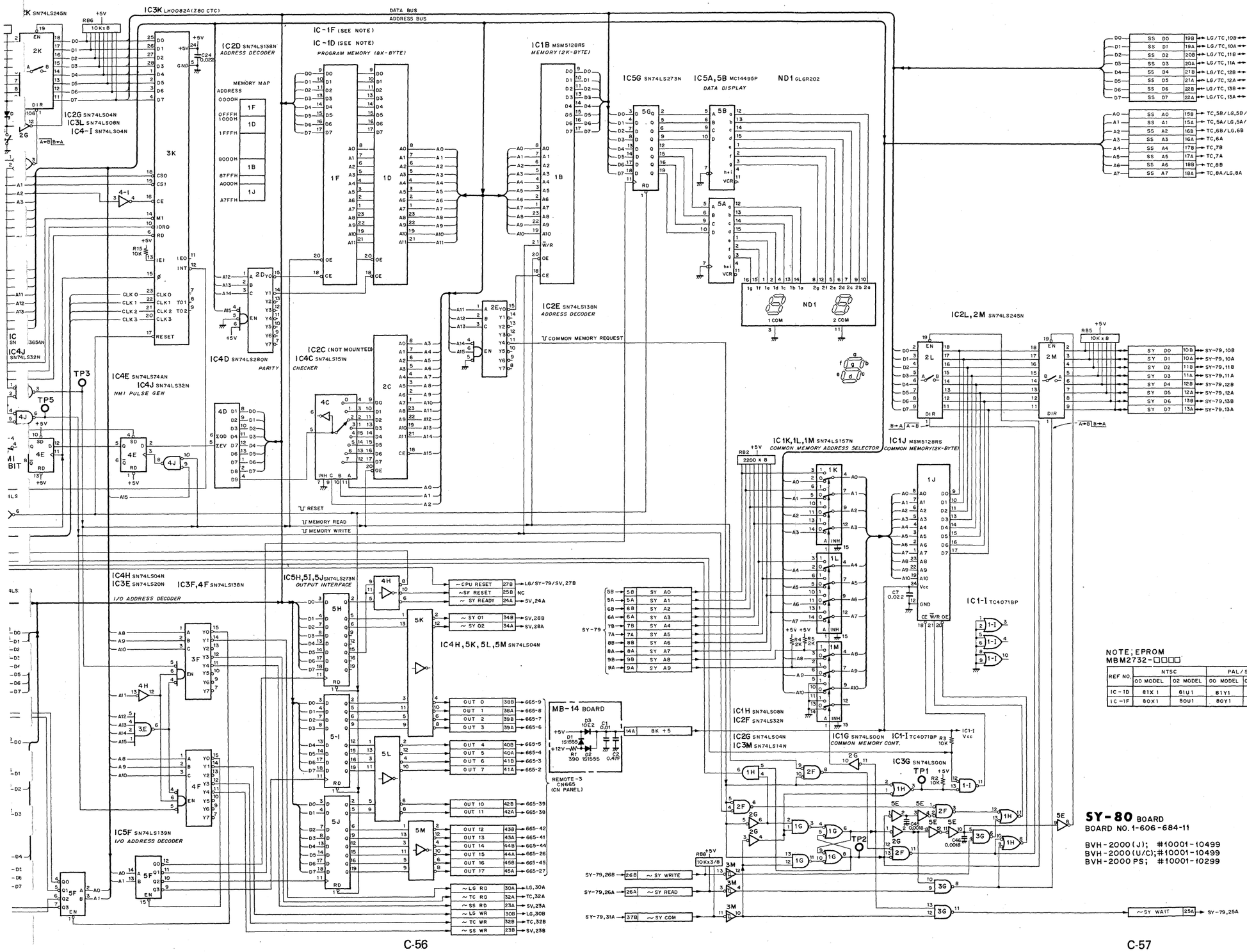

SY-80 BOARD (1-606-684-13)

Component Side

BVH-2500(J, U/C) BVH-2000PS

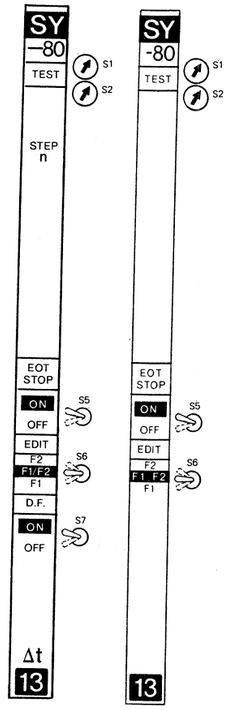

BVH-2000(J, U/C)
BVH-2000PM

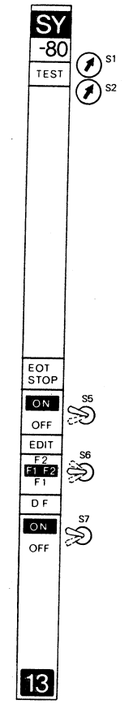

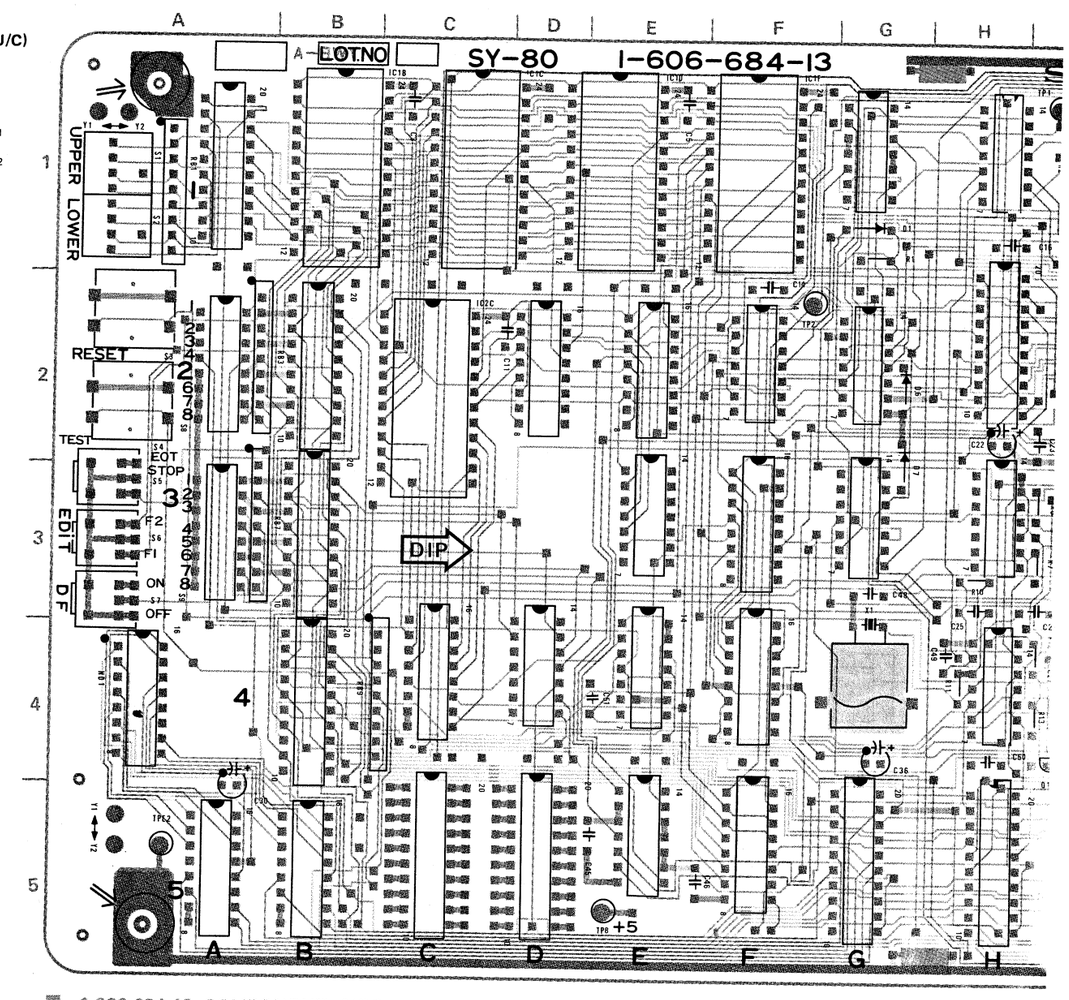

■ 1-606-684-13 COMPONENT SIDE

S1, 2

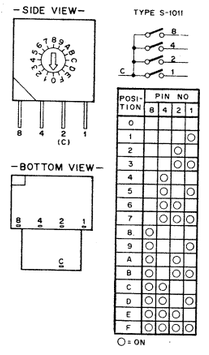

RB1, 2, 3, 4, 5, 6, 7, 8, 9

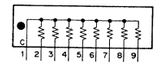

BVH-2000PS BVH-2000(J, U/C) BVH-2000PM

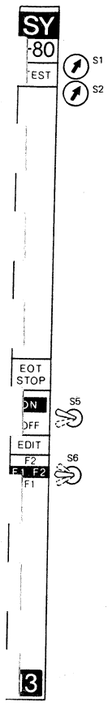

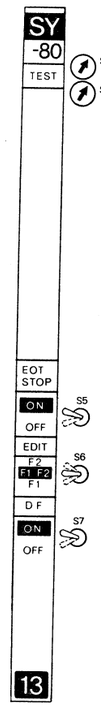

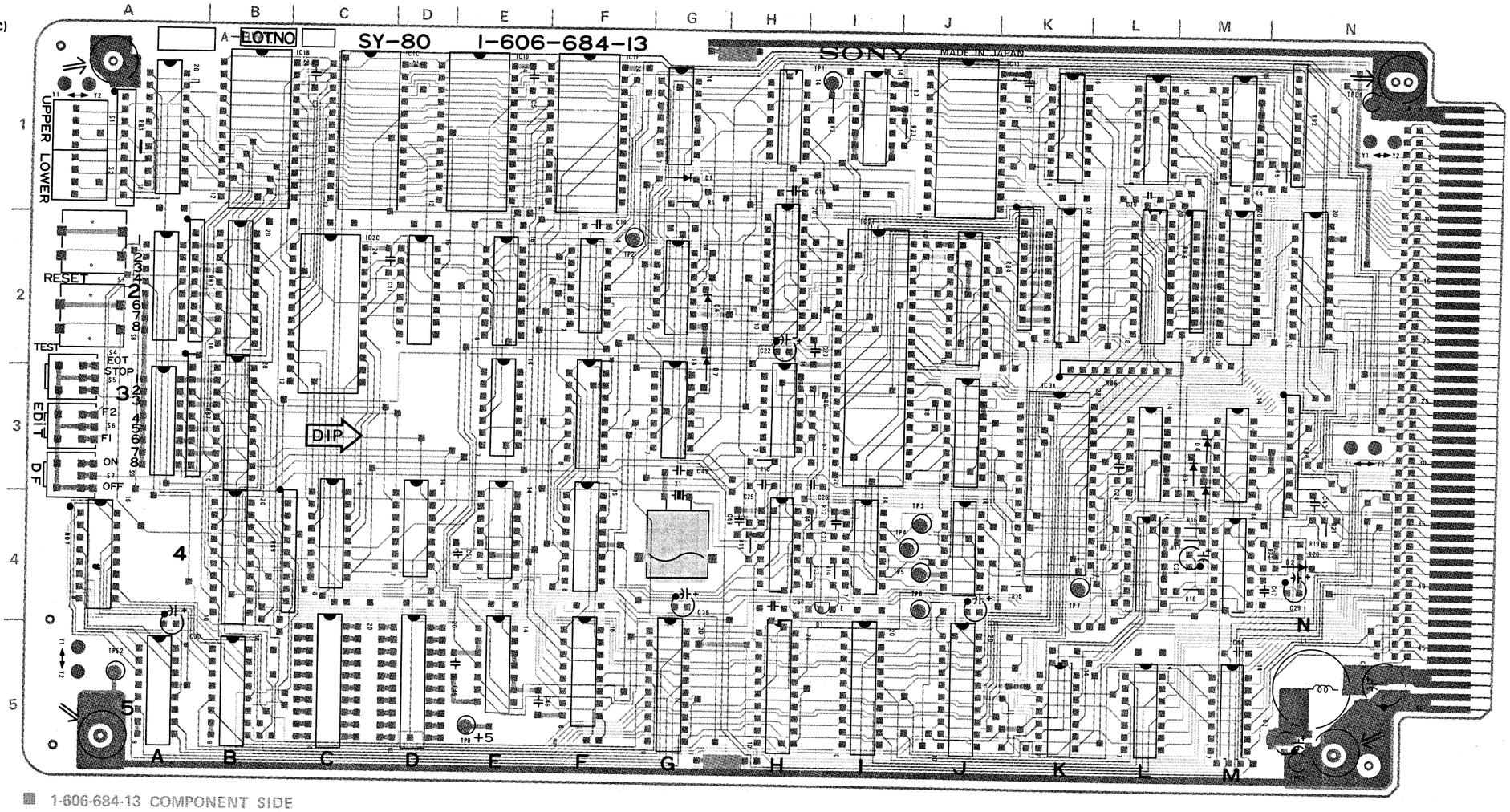

1-606-684-13 COMPONENT SIDE

SY-80 (1-606-684-13 & UP)

BVH-2000(J,U/C)
BVH-2000PS
BVH-2000PM
BVH-2500(J,U/C)

D1 1G
D2 4M
D3 3M

(BVH-2500)
D4 3M
D5 3M
D6 2G
D7 3G

IC1A
IC1B

(BVH-2500)
IC1C

IC1D
IC1F
IC1G
IC1H
IC1I
IC1J
IC1K
IC1L
IC1M
IC2B
IC2D
IC2E
IC2F
IC2G
IC2H
IC2I
IC2J
IC2K
IC2L
IC2M
IC2N
IC3B
IC3E
IC3F
IC3G
IC3H
IC3J
IC3K
IC3L
IC3M
IC4B
IC4C
IC4D
IC4E
IC4F
IC4H
IC4I
IC4J
IC4L
IC4M
IC5A
IC5B
IC5E
IC5F
IC5G
IC5H
IC5I
IC5J
IC5K
IC5L
IC5M

ND1 4A

Q1 4I

RB1 1A
RB2 1M
RB3 2A
RB4 2K
RB5 2M
RB6 2L
RB7 3A
RB8 3M
RB9 4C

(NTSC,PM)
S7 3A

S8 2A
S9 3A

TP1 1I
TP2 2F
TP3 4J
TP4 4J
TP5 4J
TP6 4J
TP7 4K
TP8 5E

TPE1 1M
TPE2 5A
TPE3 5M

X1 4G

1-606-684-13

S1, 2

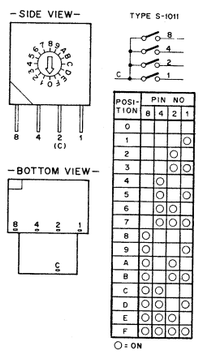

POSITION	PIN NO 8	4	2	1
0				○
1			○	
2			○	○
3		○		
4		○		○
5		○	○	
6		○	○	○
7	○			
8	○			○
9	○		○	
A	○		○	○
B	○	○		
C	○	○		○
D	○	○	○	
E	○	○	○	○
F				

○ : ON

RB1, 2, 3, 4, 5, 6, 7, 8, 9

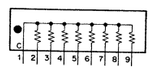

SY-80 BOARD

System Control CPU-2

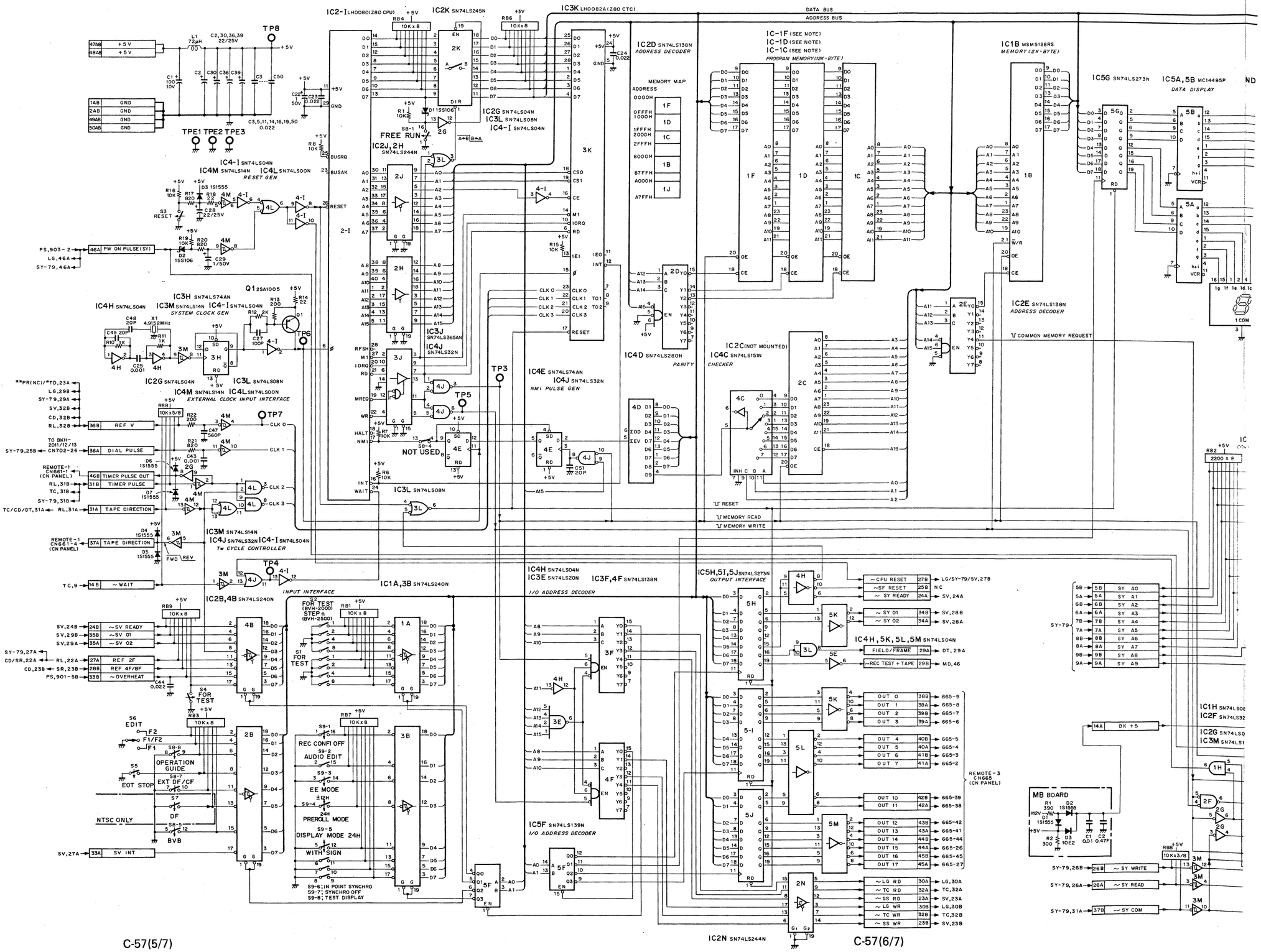

1-606-684-12 & UP CARD RACK SY-80

DATA BUS
ADDRESS BUS

IC3K LH0082A(Z80 CTC)
IC2K SN74LS245N
IC2D SN74LS138N ADDRESS DECODER
IC-1F (SEE NOTE)
IC-1D (SEE NOTE)
IC-1C (SEE NOTE)
PROGRAM MEMORY(12K-BYTE)
IC1B MSM5128RS MEMORY(2K-BYTE)
IC5G SN74LS273N
IC5A,5B MC14495P DATA DISPLAY
ND1 GL6R202
IC2N SN74LS244N
IC2L,2M SN74LS245N
IC1K,1L,1M SN74LS157N COMMON MEMORY ADDRESS SELECTOR
IC1J MSM5128RS COMMON MEMORY(2K-BYTE)
IC2G SN74LS04N
IC3L SN74LS08N
IC4-1 SN74LS04N
IC4D SN74LS280N PARITY
IC4E SN74LS74AN
IC4J SN74LS32N NMI PULSE GEN
IC2E SN74LS138N ADDRESS DECODER
IC2C(NOT MOUNTED)
IC4C SN74LS151N CHECKER
IC1H SN74LS08N
IC2F SN74LS32N
IC1G SN74LS00N
IC3M SN74LS14N
IC1-1 TC4071BP COMMON MEMORY CONT.
IC3G SN74LS00N
IC4H,5K,5L,5M SN74LS04N
IC3E SN74LS20N
IC3F,4F SN74LS138N I/O ADDRESS DECODER
IC5H,5I,5J SN74LS273N OUTPUT INTERFACE
IC5F SN74LS139N I/O ADDRESS DECODER

MEMORY MAP

ADDRESS	
0000H	1F
0FFFH / 1000H	
1FFFH / 2000H	1D
2FFFH	1C
8000H	1B
87FFH	
A000H	1J
A7FFH	

REMOTE-3 CN665 (CN PANEL)

~CPU RESET	27B	LG/SY-79/SV,27B
~SF RESET	25B	NC
~SY READY	24A	SV,24A
~SY 01	34B	SV,28B
~SY 02	34A	SV,28A
FIELD/FRAME	29A	DT,29A
~REC TEST+TAPE	29B	MD,46
OUT 0	38B	665-9
OUT 1	38A	665-8
OUT 2	39B	665-7
OUT 3	39A	665-6
OUT 4	40B	665-5
OUT 5	40A	665-4
OUT 6	41B	665-3
OUT 7	41A	665-2
OUT 10	42B	665-39
OUT 11	42A	665-38
OUT 12	43B	665-42
OUT 13	43A	665-41
OUT 14	44B	665-44
OUT 15	44A	665-26
OUT 16	45B	665-45
OUT 17	45A	665-27
~LG RD	30A	LG,30A
~TC RD	32A	TC,32A
~SS RD	23A	SV,23A
~LG WR	30B	LG,30B
~TC WR	32B	TC,32B
~SS WR	23B	SV,23B

DO	SS DO 19B	LG/TC,10B ↔ SV,19B
D1	SS D1 19A	LG/TC,10A ↔ SV,19A
D2	SS D2 20B	LG/TC,11B ↔ SV,20B
D3	SS D3 20A	LG/TC,11A ↔ SV,20A
D4	SS D4 21B	LG/TC,12B ↔ SV,21B
D5	SS D5 21A	LG/TC,12A ↔ SV,21A
D6	SS D6 22B	LG/TC,13B ↔ SV,22B
D7	SS D7 22A	LG/TC,13A ↔ SV,22A

A0	SS A0 15B	SV,15B/LG,5B/TC,5B
A1	SS A1 15A	SV,15A/LG,5A/TC,5A
A2	SS A2 16B	LG,6B/TC,6B
A3	SS A3 16A	*LG,6A/TC,6A
A4	SS A4 17B	TC,7B
A5	SS A5 17A	TC,7A
A6	SS A6 18B	TC,8B
A7	SS A7 18A	LG,8A/TC,8A

D0	SY D0 10B	SY-79,10B
D1	SY D1 10A	SY-79,10A
D2	SY D2 11B	SY-79,11B
D3	SY D3 11A	SY-79,11A
D4	SY D4 12B	SY-79,12B
D5	SY D5 12A	SY-79,12A
D6	SY D6 13B	SY-79,13B
D7	SY D7 13A	SY-79,13A

5B	SY A0	
5A	SY A1	
6B	SY A2	
6A	SY A3	
7B	SY A4	
7A	SY A5	
8B	SY A6	
8A	SY A7	
9B	SY A8	
9A	SY A9	

SY-79,26B 26B ~SY WRITE
SY-79,26A 26A ~SY READ
SY-79,31A 37B ~SY COM

~SY WAIT 25A → SY-79,25A

MB BOARD
R1 390
D2 1S1555
D1 1S1555
R2 300
D3 1G2
C1 0.01
C2 0.47F

NOTE; EPROM

REP.No.	TYPE No. BVH-2000/PS/PM	BVH-2500
IC-1C	MBM2732-82U3-2	MBM2732-82C2
IC-1D	MBM2732-81U3-4	MBM2732-81C2
IC-1F	MBM2732-80U3-3	MBM2732-80C2

*; FOR BVH-2500
**; FOR PLUG-IN TBC

SY-80 BOARD
BOARD NO.1-606-684-12 & UP

BVH-2000(J); #10501-
BVH-2000(U/C);#10501-
BVH-2000 PS; #10301-
BVH-2000 PM; #10001-
BVH-2500(J); #10001-
BVH-2500(U/C); #10001-

C-57(6/7)

C-57(7/7)

SV-43 BOARD (1-606-703-12)

Component Side

BVH-2500(J,U/C)

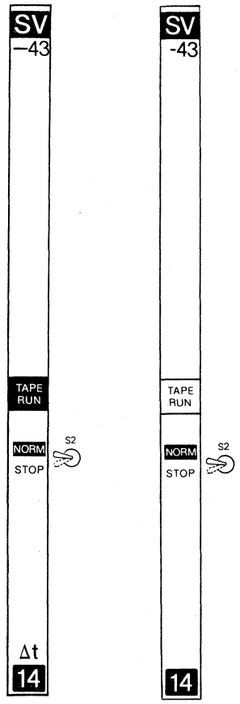

BVH-2000(J,U/C)
BVH-2000PS
BVH-2000PM

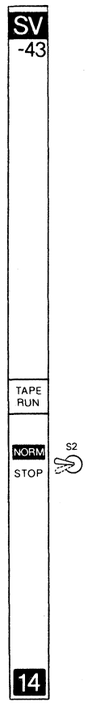

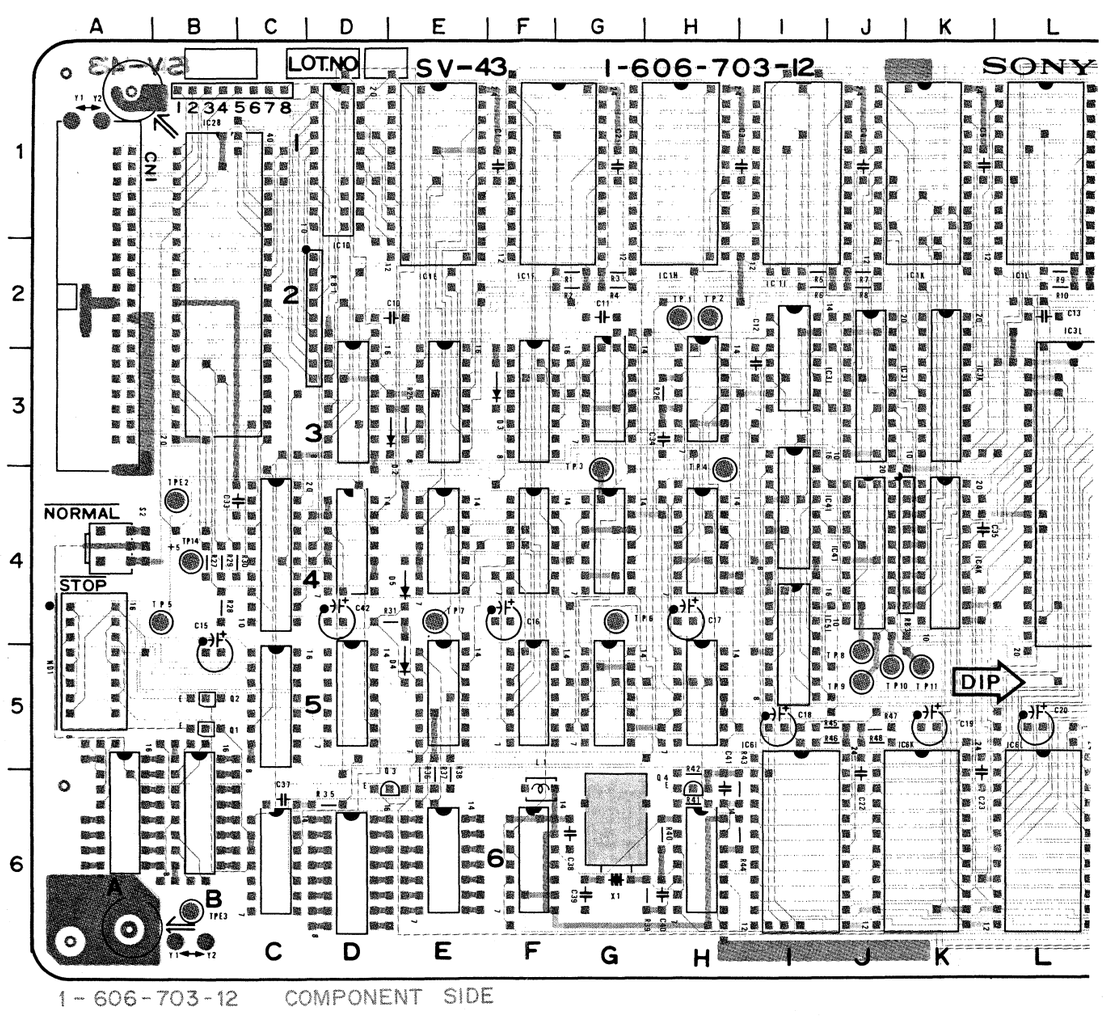

1-606-703-12 COMPONENT SIDE

RB1, 2, 3, 4, 5

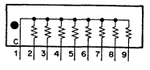

'C) BVH-2000(J,U/C)
BVH-2000PS
BVH-2000PM

SV
-43

TAPE
RUN

NORM
STOP S2

14

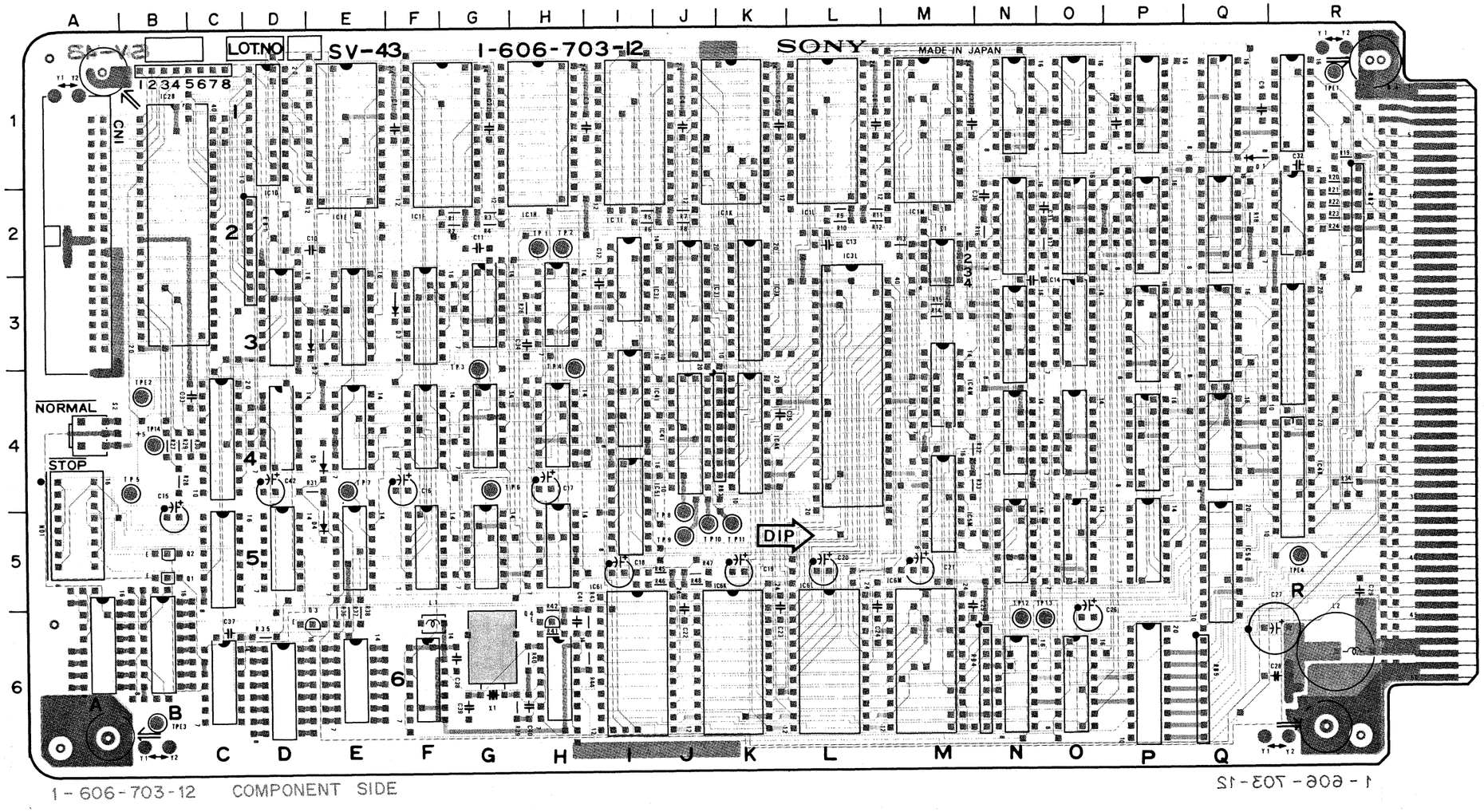

SV-43 (1-606-703-12)

BVH-2000(J,U/C)		IC5F
BVH-2000PS		IC5G
BVH-2000PM		IC5H
BVH-2500(J,U/C)		IC5I
		IC5M
CN1M	2A	IC5N
		IC5O
D1	1Q	IC5P
D2	3E	IC5Q
D3	3F	IC6C
D4	5E	IC6F
D5	4E	IC6H
		IC6I
IC1D		IC6K
IC1E		IC6M
IC1F		IC6N
IC1H		IC6O
IC1I		IC6P
IC1M		
IC1N		ND1 5A
IC1O		
IC1P		Q1 5B
IC1Q		Q2 5B
IC1R		Q3 6E
IC2B		Q4 6H
IC2N		
IC2O		RB1 2D
IC2P		RB2 2R
IC2Q		RB3 4K
IC2R		RB4 6N
IC3D		RB5 6Q
IC3E		
IC3F		S1 2M
IC3G		S2 4A
IC3H		
IC3I		TP1 2H
IC3J		TP2 2H
IC3K		TP3 4G
IC3L		TP4 4H
IC3N		TP5 4B
IC3O		TP6 4G
IC3P		TP7 4E
IC3Q		TP8 5J
IC3R		TP9 5J
IC4C		TP10 5J
IC4D		TP11 5K
IC4E		TP12 6N
IC4F		TP13 6O
IC4G		TP14 4B
IC4H		
IC4I		TPE1 1R
IC4J		TPE2 4B
IC4K		TPE3 6B
IC4M		TPE4 5R
IC4N		
IC4O		X1 6G
IC4P		
IC4Q		
IC4R		
IC5C		
IC5D		
IC5E		

RB1, 2, 3, 4, 5

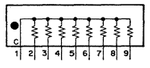

SV-43 BOARD
Servo CPU

CN1 (FOR TEST)

IC2B LH0080 (280 CPU) HOST CPU

IC1D SN74LS245N

IC2Q MC14503BCP

IC4-I MC14503BCP I/O INTERFACE

IC5-I TC40174BP

HOST CPU DATA BUS

HOST CPU ADDRESS BUS

HOST CPU SYSTEM CONTROL BUS

IC4D SN74LS03N IC4H SN74LS08N IC5H SN74LS00N
IC3H SN74LS10N IC5F SN74LS10N IC4G SN74LS02N
DATA BUS CONT

IC3N SN74LS139N IC3G SN74LS32N
IC3D SN74LS139N ADDRESS DECODER

IC4G SN74LS02N IC5H SN74LS00N
DATA TRANSFER DIRECTION CONT

IC4H SN74LS08N IC3I SN74LS32N

IC6C SN74LS04N IC4D SN74LS03N IC5E SN74LS32N IC4C SN74LS244N
RESET GEN

IC6H SN74S04N CLOCK GEN

IC6F SN74LS107AN DIVIDER & DRIVER

IC4F SN74LS04N IC4E SN74LS30N

IC4C SN74LS244N

IC4D SN74LS03N

IC6C SN74LS04N IC5D SN74LS74AN
INTERRUPT PULSE GEN

IC3E SN74LS138N (3-TO-8 DECODER)

IC3D SN74LS139N IC3G SN74LS32N
ADDRESS DECODER

IC1E (SEE NOTE) IC1F (SEE NOTE) IC1H (SEE NOTE) IC1-I (SEE NOTE)

IC4F SN74LS04N IC5G SN74LS74AN
MEMORY CONT

IC3F SN74LS139N
ADDRESS DECODER

IC1M MSM5128RS
RAM (2K-BYTE)

IC4G SN74LS02N IC5H SN74LS00N

IC4H SN74LS08N IC3I SN74LS32N

IC4N SN74LS08N IC2N MC14538BCP IC5P SN74LS02N IC1N TC4520BP IC5H SN74LS00N IC3-O SN74LS04N
PROGRAM ERROR DET

IC4G SN74LS02N IC5H SN74LS00N IC3-I SN74LS04N
HARD CPU BUS

IC3H SN74
BUS CONNEC

BUS SEPARATOR RB4 +5V 22K x 8

HARD CPU DATA BUS

IC-5D SN74LS74AN

OUTPUT BUFFER RB5 +5V 22K x 8

ND1 GL-6R202

IC1P TC40174BP IC5C MC14495P (7-SEGMENT DECODER) IC6C SN74LS04N Q1,Q2 2SA1175 DATA DISPLAY IC1R TC4049BP

IC3L LH0080 (Z80CPU) HARD CPU

HARD CPU ADDRESS BUS

IC2-0 SN74LS139N IC4N SN74LS08N I/O ADDRESS DECODER

IC5N SN74LS32N IC2R SN74LS04N

IC4G SN74LS02N IC3-I SN74LS32N IC4H SN74LS08N HARD CPU BUS REQUEST GEN

IC4K SN74LS245N

IC3K,3J,4J SN74LS244N

IC3H SN74LS10N BUS CONNECT CONT

IC4J SN74LS244N

IC4M SN74LS74AN IC2R SN74LS04N Tw CYCLE CONTROLLER

IC5N SN74LS32N INTERRUPT PULSE GEN

IC2R SN74LS04N

TP10 TP12 TP9 TP11

IORQ WR RD MREQ HARD CPU SYSTEM CONTROL BUS

RESET Ø

IC4F SN74LS04N

SV DO	41B	RL/CD/SR,41B
SV D1	41A	RL/CD/SR,41A
SV D2	42B	RL/CD/SR,42B
SV D3	42A	RL/CD/SR,42A
SV D4	43B	RL/CD/SR,43B
SV D5	43A	RL/CD/SR,43A
SV D6	44B	RL/CD/SR,44B
SV D7	44A	RL/CD/SR,44A
RL CS	35A	RL,35B
CD CS	35B	CD,35B
SV AO	37B	RL/CD/SR,37B
SV A1	37A	RL/CD/SR,37A
SV A2	38B	RL/CD/SR,38B
SV A3	38A	RL/CD/SR,38A
SV A4	39B	RL/CD/SR,39B
SV A5	39A	RL/CD/SR,39A
TAPE HOURS	12B	TM,022-3 (TTP)
WR	36B	RL/CD/SR,36B
RD	36A	RL/CD/SR,36A

IC5P SN74LS02N
IC3-0 SN74LS04N
IC4-0 SN74LS32N

IC1N TC4520BP
IC2N MC14538BCP

IC1-0 SN74LS138N (13-TO-8 DECODER)
IC2-0 SN74LS139N

PROGRAM ERROR DET ADDRESS DECODER

IC1Q TC40174BP
IC1R TC4049BP
IC2R SN74LS04N

OUTPUT BUFFER

HEAD HOURS	11A	HM-05,021-2
IP DRIVE	6A	TT,010-8B
BRAKE SOL	5B	TT,010-15A
PINCH	6B	TT,010-15B
THREAD CONT	7A	**PR(NC)/*TD,43B
		TT,010-7A
MINI ARM SOL	11B	TT,010-16A
SV READY	24B	SY-80,24B
SV O2	29A	SY-80,35A

IC3P,3Q,4P,4Q SN74LS670N (4-BY-4 REGISTOR)

IC3R,4R SN74LS244N SERVO-SYS INTERFACING MEMORY (4-BYTE)

SS DO	19B	SY-80,19B LG/TC,10B
SS D1	19A	SY-80,19A LG/TC,10A
SS D2	20B	SY-80,20B LG/TC,11B
SS D3	20A	SY-80,20A LG/TC,11A
SS D4	21B	SY-80,21B LG/TC,12B
SS D5	21A	SY-80,21A LG/TC,12A
SS D6	22B	SY-80,22B LG/TC,13B
SS D7	22A	SY-80,22A LG/TC,15A
SS RD	23A	SY-80,23A
SS WR	23B	SY-80,23B
SS AO	15B	SY-80,15B LG/TC,5B
SS A1	15A	SY-80,15A LG/TC,5A

IC3-0 SN74LS04N
IC6H SN74S04N

SV INT	27A	SY-80,33A
SV O1	29B	SY-80,35B
10MHz CLOCK	34A	CD,34B
GND	33A	RL,34A

RL,34B	34B	V/8
SY-80,34B	28B	SY O1
SY-80,34A	28A	SY O2
TT,010-14B	9B	TAPE DET
TT,010-7B	8B	THREAD
TT,010-8A	8A	UNTHREAD
RA,203-12A	13B	REEL TEMPER
NC	10A	SPR IN
CA,101-8A	12A	OVERHEAT
RL,5B	5A	BOARD (X)
DA,111-8B	10B	BOARD (Y)

IC6-I (SEE NOTE) IC6K (SEE NOTE)

IC5M SN74LS139N IC4N SN74LS08N IC4-0 SN74LS32N ADDRESS DECODER

IC4-0 SN74LS32N IC4N SN74LS08N IC5M SN74LS139N ADDRESS DECODER

IC6M MSM5128RS RAM (2K-BYTE)

I/O INTERFACE TP13

IC5P SN74LS02N IC5-0 SN74LS00N HARD RESET GEN

Q3 2SC1364

S2 TAPE RUN STOP NORM

IC6-0 TC40174BP IC2P,2Q,6N MC14503BCP

IC5-0 SN74LS00N

NOTE;EPROM

REF.No.	TYPE No. BVH-2000/PS/PM	TYPE No. BVH-2500
IC1E	MBM2732-S1U3-3	MBM2732-S1C2
IC1F	MBM2732-S2U3	MBM2732-S2C2
IC1H	MBM2732-S3U3-3	MBM2732-S3C2
IC1-I	MBM2732-S4U3	MBM2732-S4C2
IC6-I	MBM2732-S7U3-2	MBM2732-S7C2-1
IC6K	MBM2732-S8U3-2	MBM2732-S8C2

HARD RESET 9A → CA,101-7A

*; FOR BVH-2500
**;FOR PLUG-IN TBC

SV-43 BOARD
BOARD NO. 1-606-703-11/-12 & UP
BVH-2000(J); #10001-
BVH-2000(U/C);#10001-
BVH-2000PS; #10001-
BVH-2000PM; #10001-
BVH-2500(J); #10001-
BVH-2500(U/C); #10001-

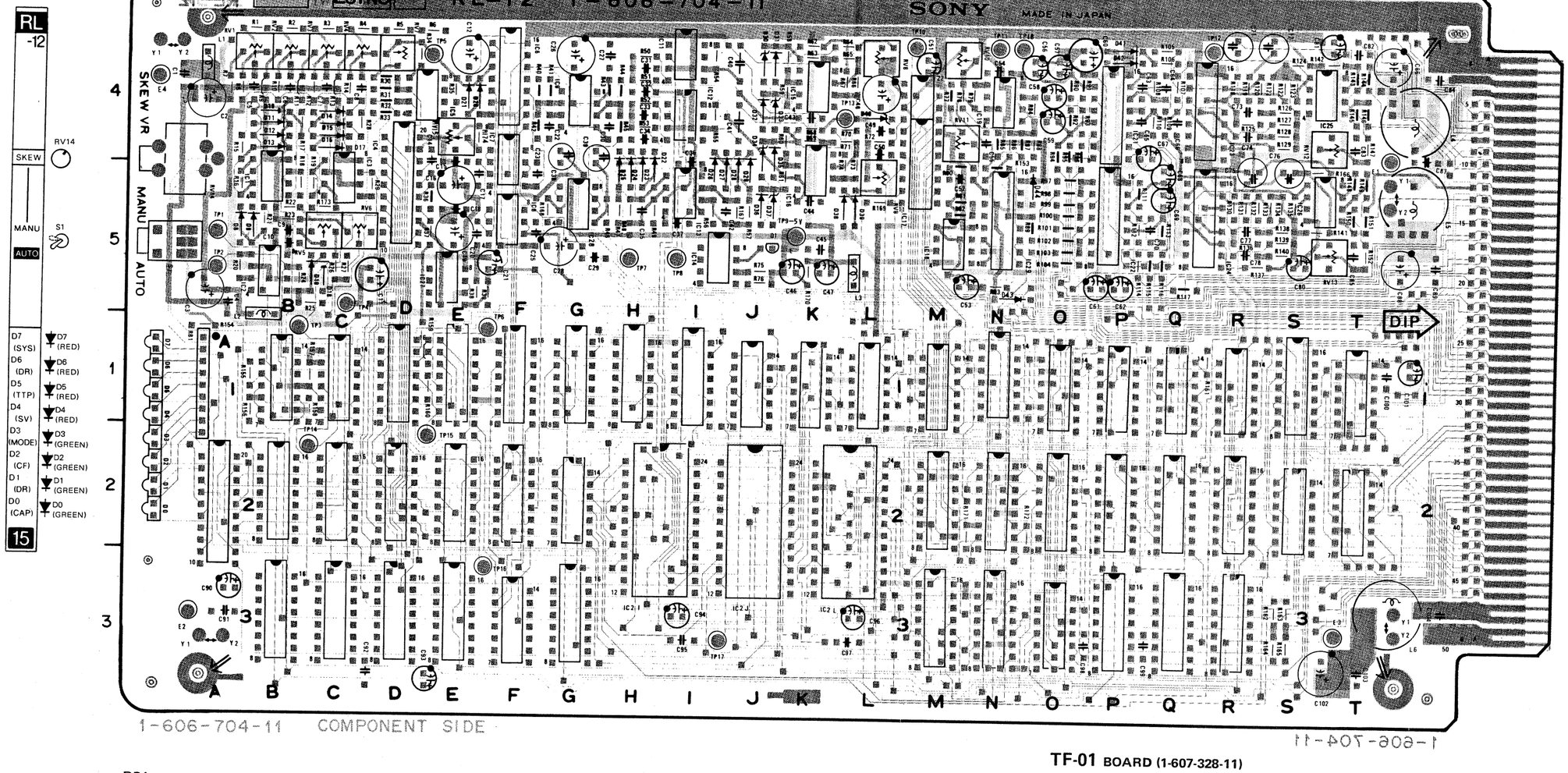

RB1

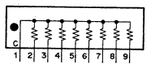

TF-01 BOARD (1-607-328-11)

Component Side

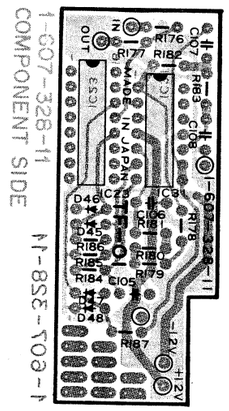

RL-12 (1-606-704-11)

BVH-2000(J,U/C)		IC2P	
BVH-2000PS		IC2Q	
		IC2R	
D0	2A	IC2S	
D1	2A	IC2T	
D2	2A	IC3	5C
D3	2A	IC3F	
D4	1A	IC3M	
D5	1A	IC3N	
D6	1A	IC30	
D7	1A	IC4	5D
D8	5A	IC5	4E
D9	5A	IC6	4F
D10	4B	IC7	4F
D11	4B	IC8	5F
D12	4B	IC9	4G
D13	4B	IC11	4I
D14	4C	IC12	4I
D15	4C	IC13	5I
D16	4C	IC14	5I
D17	4C	IC15	4K
D18	5C	IC16	5K
D19	5B	IC17	4M
D20	4E	IC18	5M
D21	4E	IC19	4N
D22	5H	IC21	4P
D23	5H	IC22	5P
D24	5H		
D25	5H	IC23	4Q
D26	5I	(TF-01 BOARD)	
D27	5I		
D28	5J	IC25	4S
D29	5J	IC26	5S
D38	5L	IC27	5E
D39	5L	IC28	5G
D40	4L	IC29	5N
D41	4P		
D42	4P	IC31	4Q
D43	5N	(TF-01 BOARD)	
D44	5N		
		Q1	5J
D45	5Q		
(TF-01 BOARD)		RB1	1A
D46	5Q		
(TF-01 BOARD)		RV1	4A
		RV2	4B
		RV3	4C
D47	5Q	RV4	4C
(TF-01 BOARD)		RV5	5C
		RV6	5C
D48	5Q	RV7	4D
(TF-01 BOARD)		RV8	4L
		RV9	5L
IC1	5B	RV10	4M
IC1B		RV11	4M
IC1C		RV12	4S
IC1D		RV13	5S
IC1E		RV14	5A
IC1F		RV15	4E
IC1G			
IC1H		S1	5A
IC1I			
IC1J		TP1	5A
IC1K		TP2	5A
IC1L		TP3	1B
IC1M		TP4	5C
IC1N		TP5	4E
IC1O		TP6	1F
IC1P		TP7	5H
IC1Q		TP8	5I
IC1R		TP9	5K
IC1S		TP10	4M
IC1T		TP11	4N
IC2	5B	TP13	4L
IC2A		TP14	2B
IC2C		TP15	2E
IC2D		TP16	3F
IC2E		TP17	3I
IC2F		TP18	4N
IC2G			
IC2H		E1	4T
IC2J		E2	3A
IC2L		E3	3T
IC2M		E4	4A
IC2N			
IC2O			

RL-12 BOARD (1/2)

Reel Servo

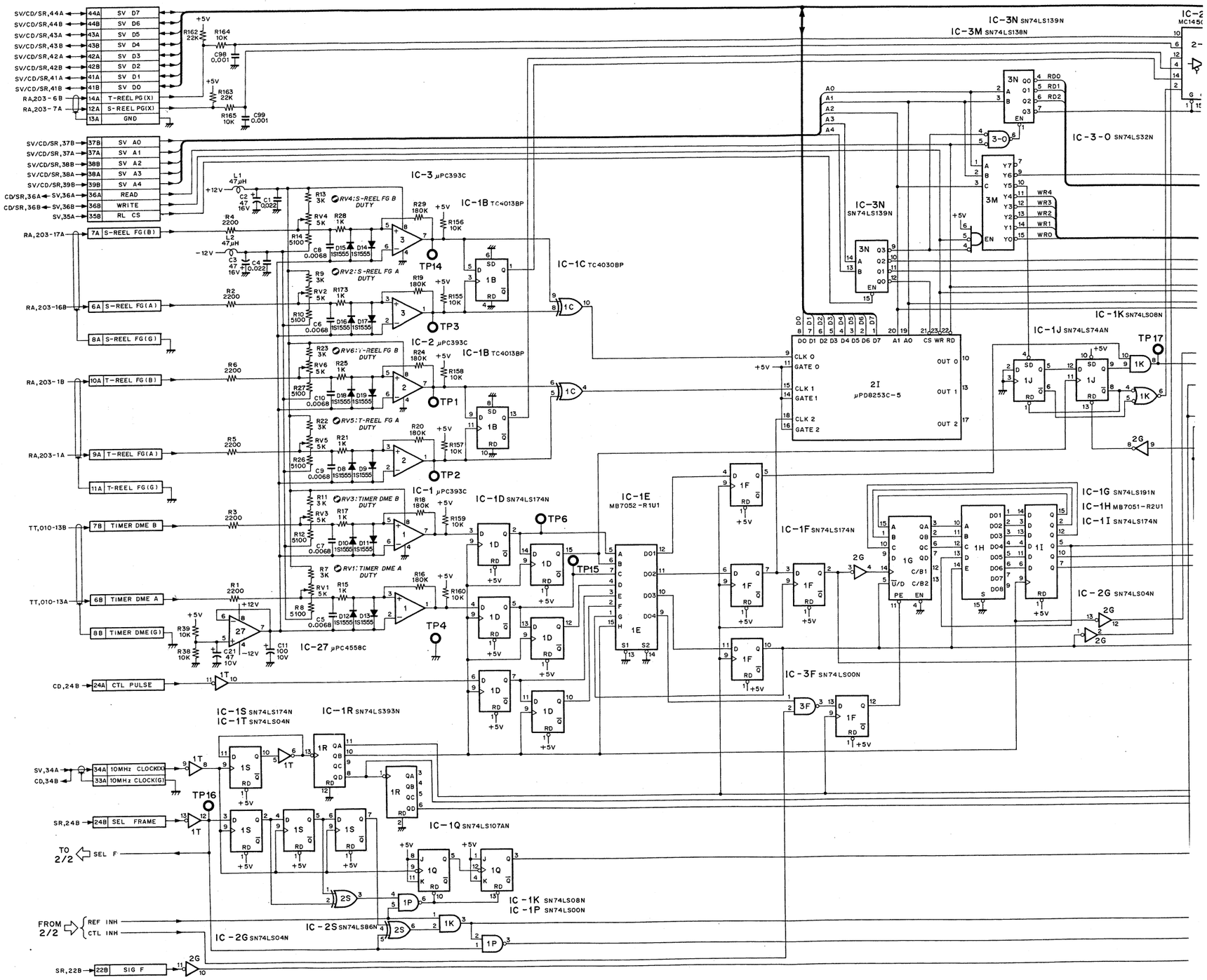

1-606-704-11 NTSC ; #10001 – 10499
PS ; #10001 – 10299
CARD RACK RL-12 (1/2)

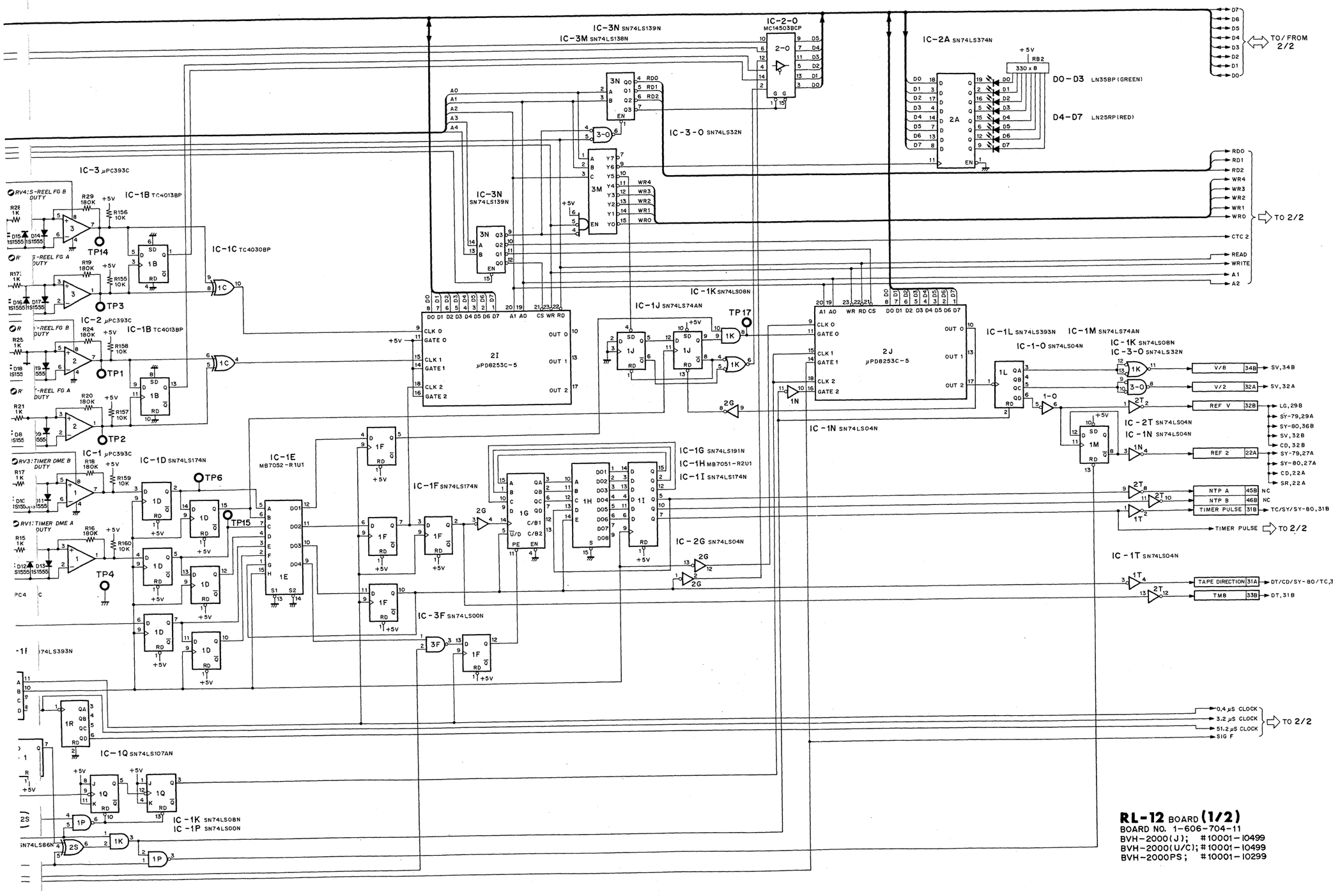

RL-12 BOARD (1/2)
BOARD NO. 1-606-704-11
BVH-2000(J); #10001-10499
BVH-2000(U/C); #10001-10499
BVH-2000PS; #10001-10299

NTSC ; #10001 – 10299
1-606-704-11 PS ; #10001 – 10099
CARD RACK RL-12 (2/2) RL-1

RL-12 BOARD (2/2)

Reel Servo

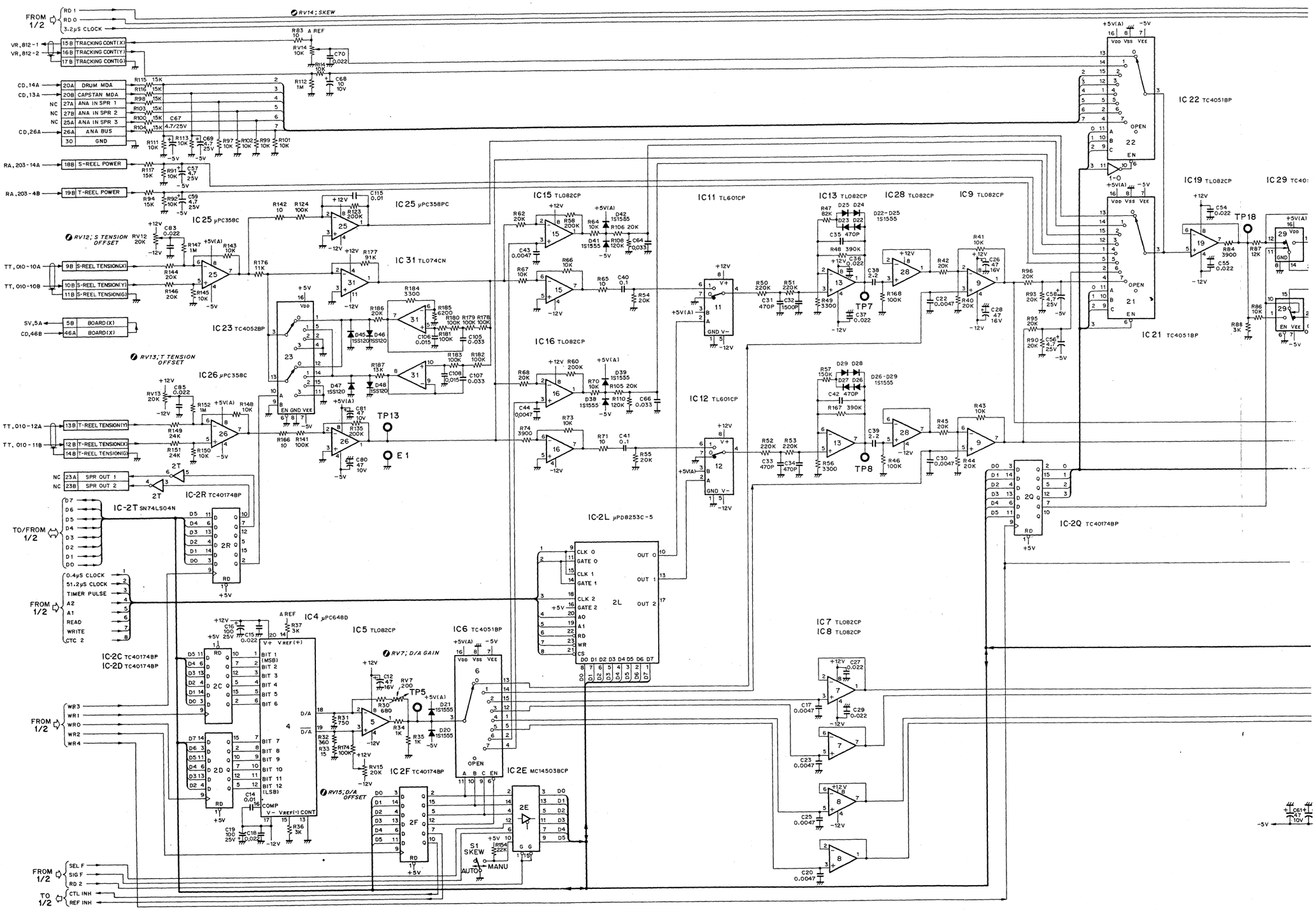

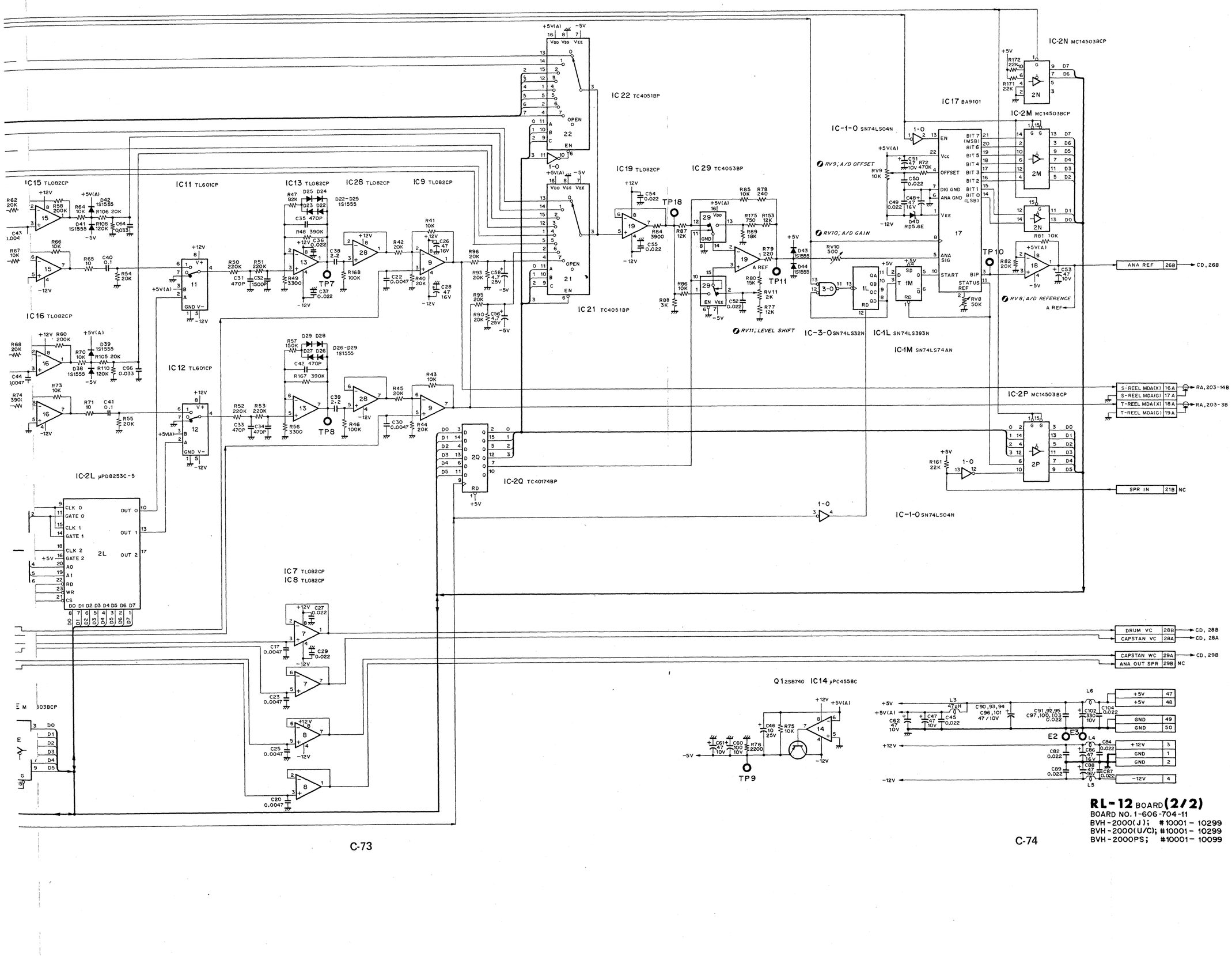

RL-12 BOARD **(2/2)**
BOARD NO. 1-606-704-11
BVH-2000(J); #10001 – 10299
BVH-2000(U/C); #10001 – 10299
BVH-2000PS; #10001 – 10099

RL-12 BOARD (2/2)

Reel Servo

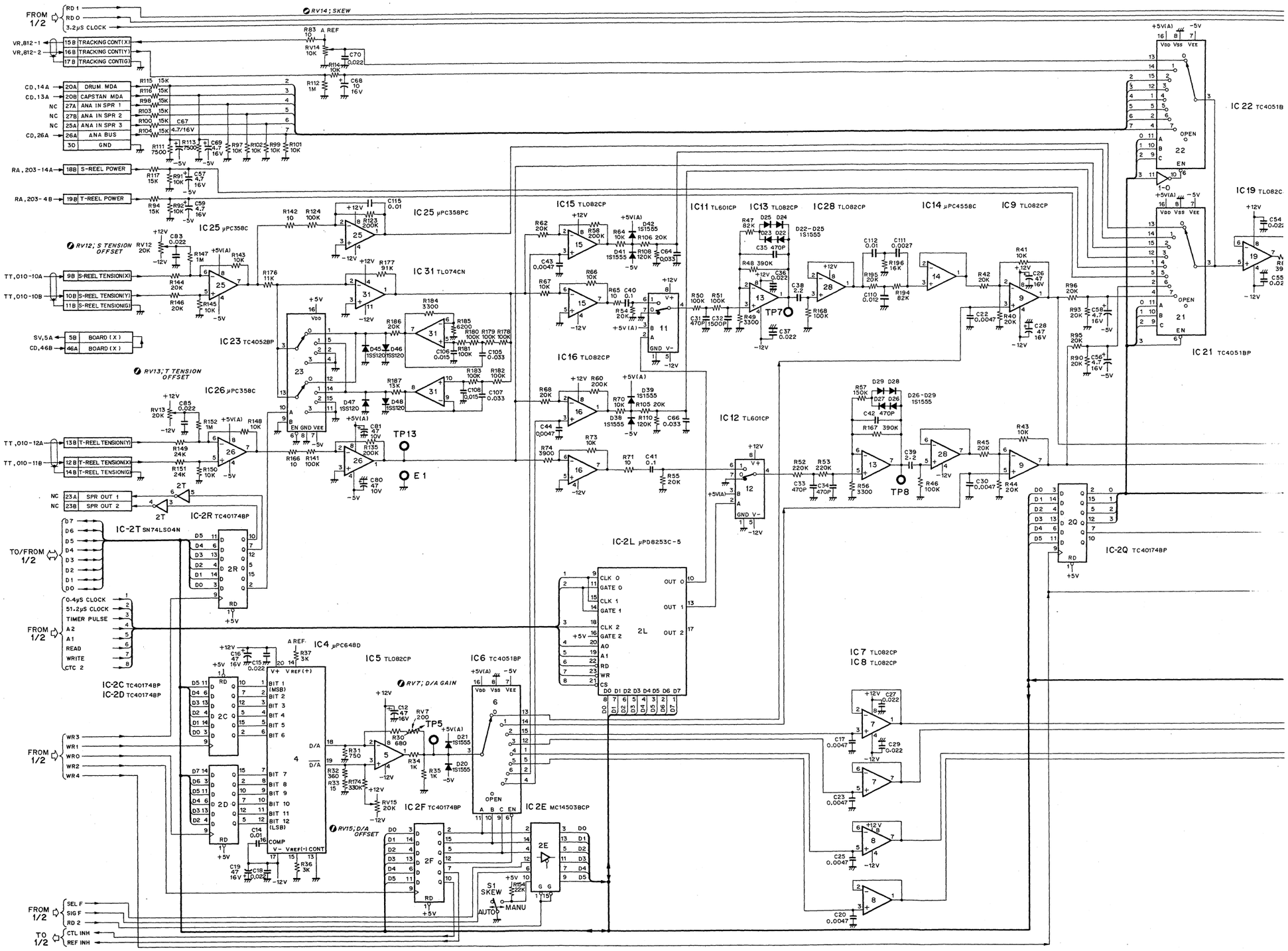

NTSC ; #10301 – 10499
1-606-704-11 PS ; #10101 – 10299
CARD RACK RL-12 (2/2)

IC 22 TC4051BP
IC 21 TC4051BP
IC 19 TL082CP
IC 29 TC4053BP
IC15 TL082CP
IC11 TL601CP
IC13 TL082CP
IC28 TL082CP
IC14 μPC4558C
IC9 TL082CP
IC16 TL082CP
IC12 TL601CP
IC-2L μPD8253C-5
IC-2Q TC40174BP
IC-2N MC14503BCP
IC17 BA9101
IC-2M MC14503BCP
IC-1-0 SN74LS04N
IC-3-0 SN74LS32N
IC-1L SN74LS393N
IC-1M SN74LS74AN
IC-2P MC14503BCP
IC-1-0 SN74LS04N
IC7 TL082CP
IC8 TL082CP
IC 6 TC4051BP
IC 2E MC14503BCP
Q1 2SB740 IC14 μPC4558C

RV9; A/D OFFSET
RV10; A/D GAIN
RV11; LEVEL SHIFT
RV8; A/D REFERENCE

TP7 TP8 TP9 TP10 TP11 TP18

ANA REF 26B → CD, 26B
S-REEL MDA(X) 16A
S-REEL MDA(G) 17A → RA, 203-14B
T-REEL MDA(X) 18A
T-REEL MDA(G) 19A → RA, 203-3B
SPR IN 21B NC
DRUM VC 28B → CD, 28B
CAPSTAN VC 28A → CD, 28A
CAPSTAN WC 29A → CD, 29B
ANA OUT SPR 29B NC

+5V 47
+5V 48
GND 49
GND 50
+12V 3
GND 1
GND 2
−12V 4

RL-12 BOARD (2/2)
BOARD NO. 1-606-704-11
BVH-2000(J); #10301-10499
BVH-2000(U/C); #10301-10499
BVH-2000PS; #10101-10299

RL-12 BOARD (1-606-704-12)

Component Side

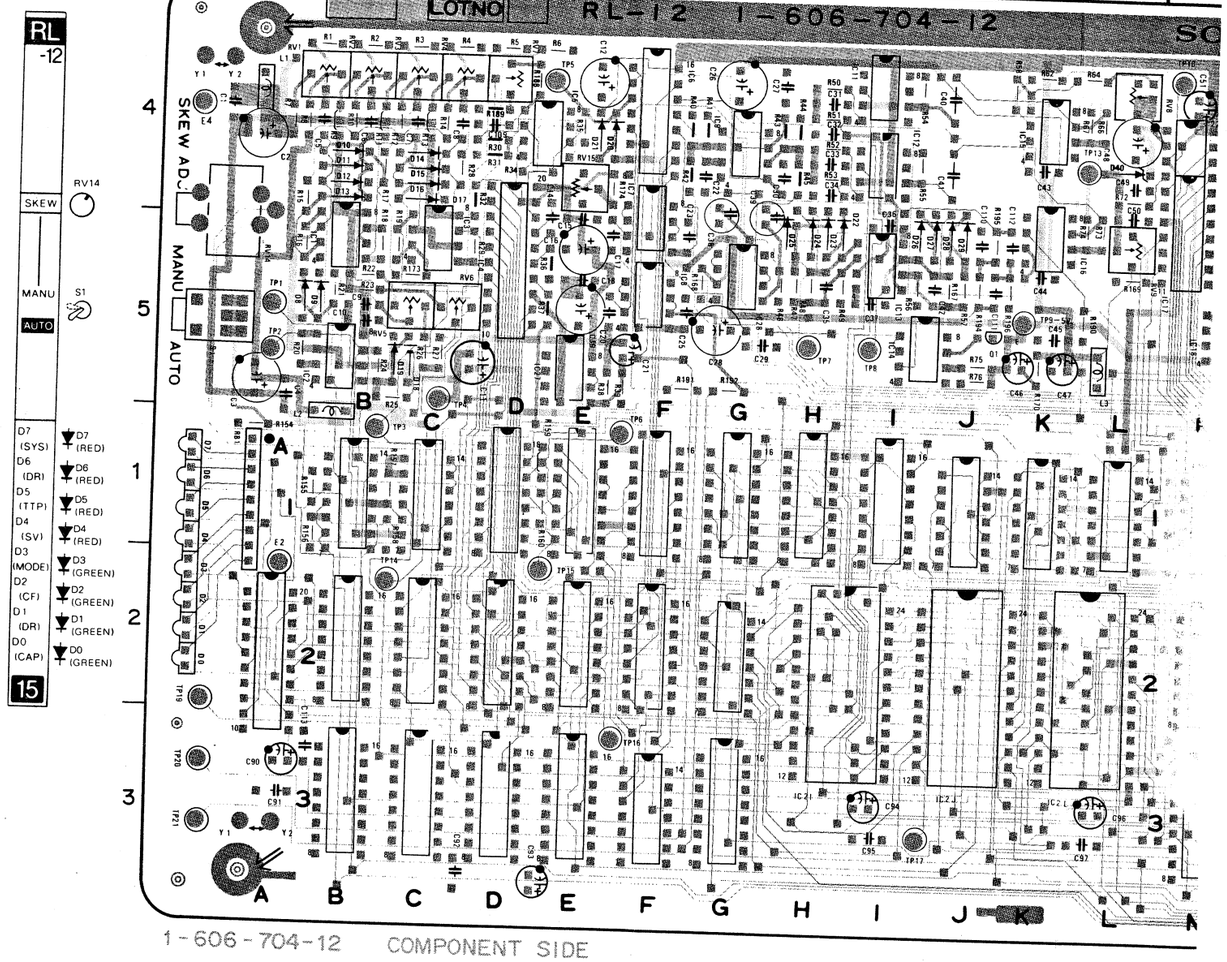

RB1

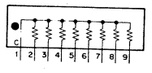

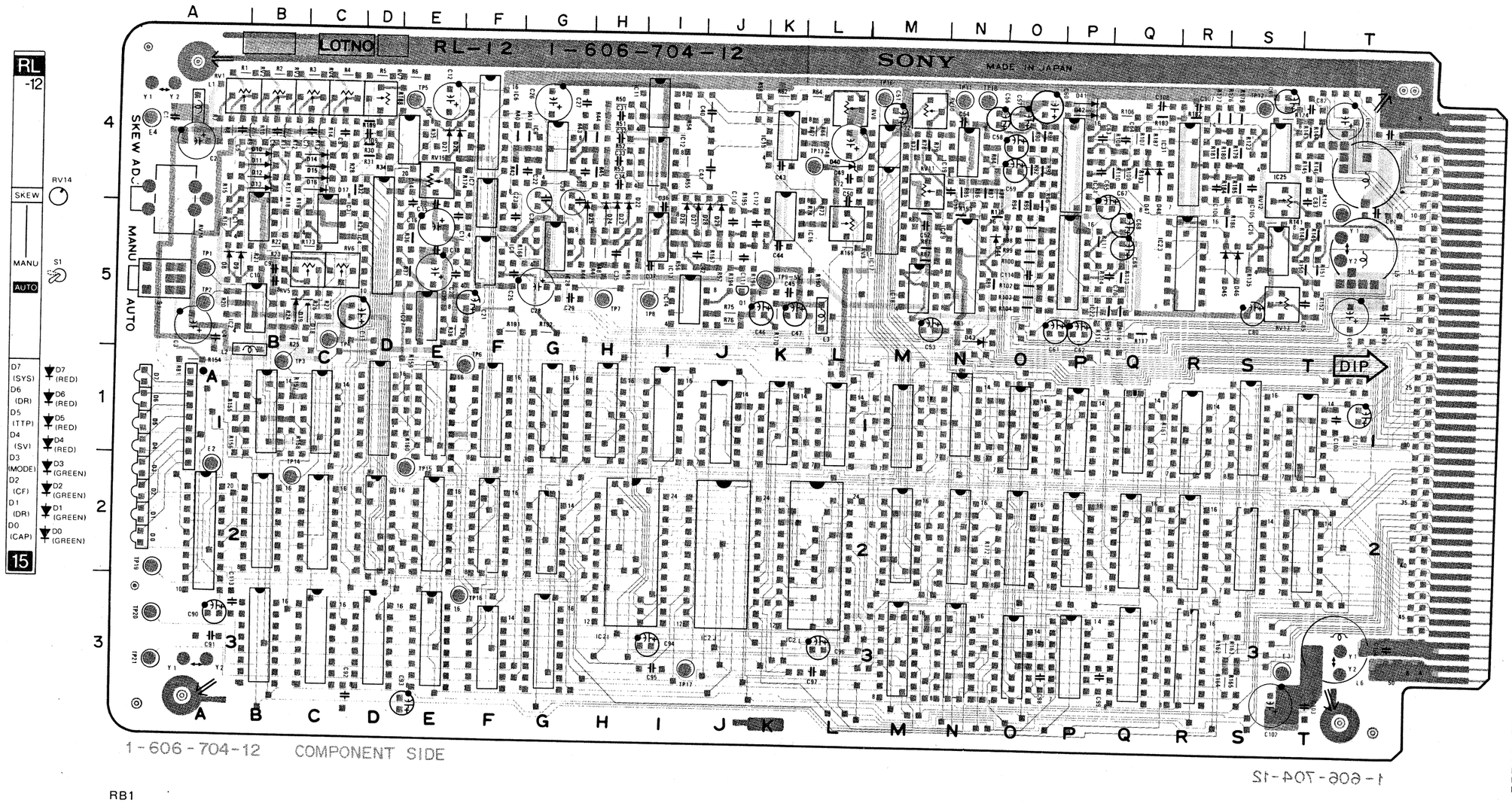

RB1

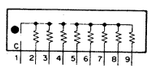

RL-12 (1-606-704-12)

BVH-2000(J,U/C)
BVH-2000PS
BVH-2000PM

D0	2A	IC1	5B
D1	2A	IC1B	
D2	2A	IC1C	
D3	2A	IC1D	
D4	1A	IC1E	
D5	1A	IC1F	
D6	1A	IC1G	
D7	1A	IC1H	
D8	5A	IC1I	
D9	5A	IC1J	
D10	4B	IC1K	
D11	4B	IC1L	
D12	4B	IC1M	
D13	4B	IC1N	
D14	4C	IC1O	
D15	4C	IC1P	
D16	4C	IC1Q	
D17	4C	IC1R	
D18	5C	IC1S	
D19	5B	IC1T	
D20	4E	IC2	5B
D21	4E	IC2A	
D22	5H	IC2C	
D23	5H	IC2D	
D24	5H	IC2E	
D25	5H	IC2F	
D26	5I	IC2G	
D27	5I	IC2H	
D28	5J	IC2J	
D29	5J	IC2L	
D40	4L	IC2M	
D43	5N	IC2N	
D44	5N	IC20	
D45	5S		
D46	5S	RB1	1A
D47	4Q		
D48	4Q		

IC2P		RV1	4A
IC2Q		RV2	4B
IC2R		RV3	4C
IC2S		RV4	4C
IC2T		RV5	5C
IC3	5C	RV6	5C
IC3F		RV7	4D
IC3M		RV8	4L
IC3N		RV9	5L
IC3O		RV10	4M
IC3P		RV11	4M
IC4	5D	RV12	4S
IC5	4E	RV13	5S
IC6	4F	RV14	5A
IC7	4F	RV15	4E
IC8	5F		
IC9	4G	S1	5A
IC11	4I		
IC12	4I	TP1	5A
IC13	5I	TP2	5A
IC14	5I	TP3	1B
IC15	4K	TP4	5C
IC16	5K	TP5	4E
IC17	4M	TP6	1F
IC18	5M	TP7	5H
IC19	4N	TP8	5I
IC21	4P	TP9	5K
IC22	5P	TP10	4M
IC23	5R	TP11	4N
IC25	4S	TP12	4S
IC26	5S	TP13	4L
IC27	5E	TP14	2B
IC28	5G	TP15	2E
IC29	5N	TP16	3F
IC31	4R	TP17	3I
		TP18	4N
Q1	5J	TP19	3A
		TP20	3A
		TP21	3A
		E1	4T
		E2	2A
		E3	3T
		E4	4A

RL-12 BOARD (1/2)

Reel Servo

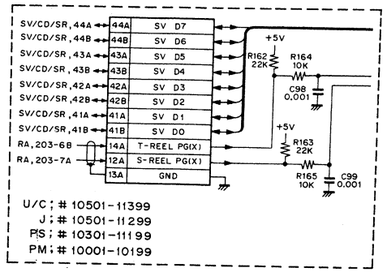

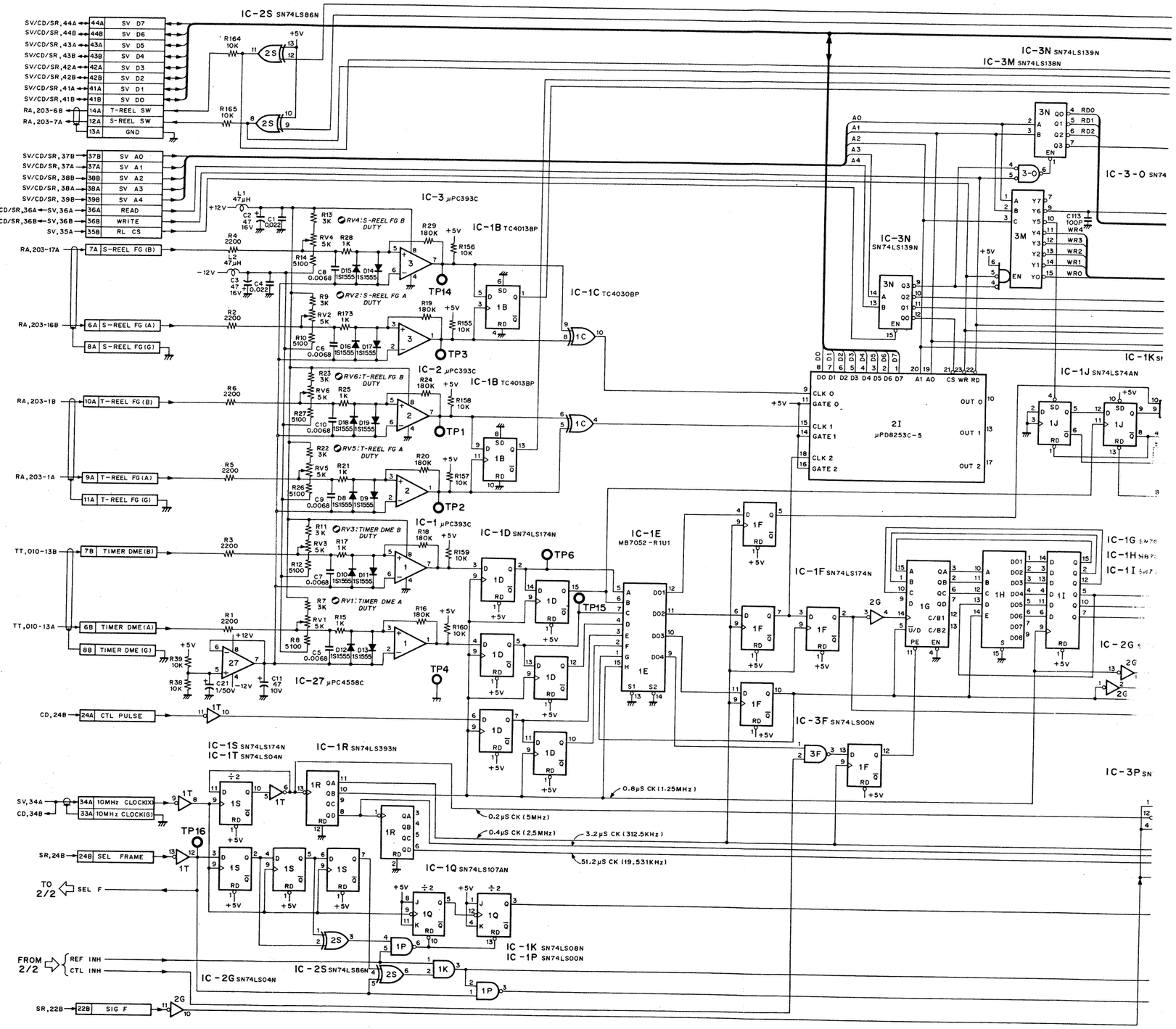

1-606-704-12 CARD RACK RL-12 (1/2)

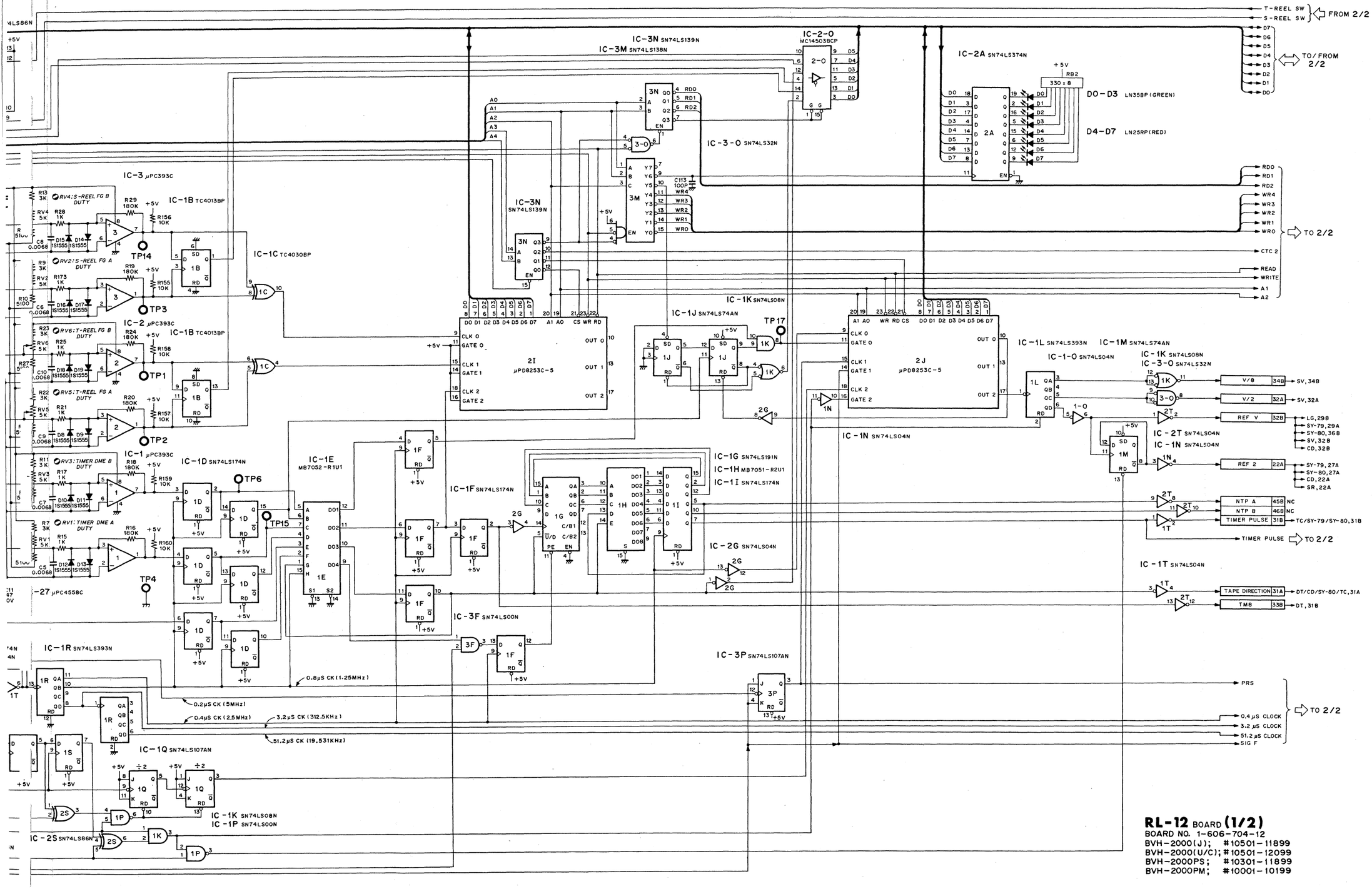

RL-12 BOARD (1/2)
BOARD NO. 1-606-704-12
BVH-2000(J); #10501-11899
BVH-2000(U/C); #10501-12099
BVH-2000PS; #10301-11899
BVH-2000PM; #10001-10199

RL-12 BOARD (2/2)

Reel Servo

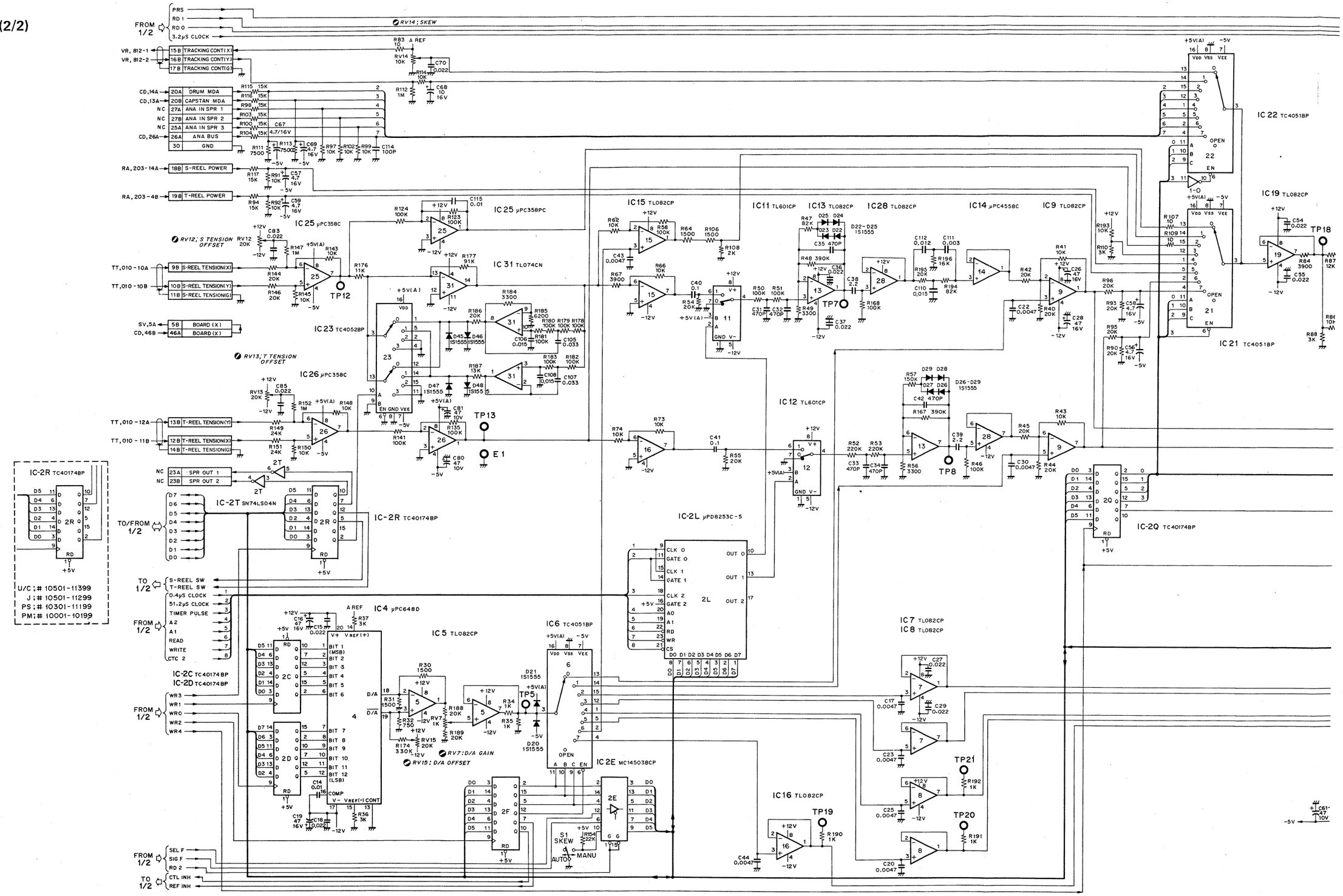

C-77(11/25)

C-77(12/25)

1-606-704-12 | CARD RACK RL-12 (2/2)

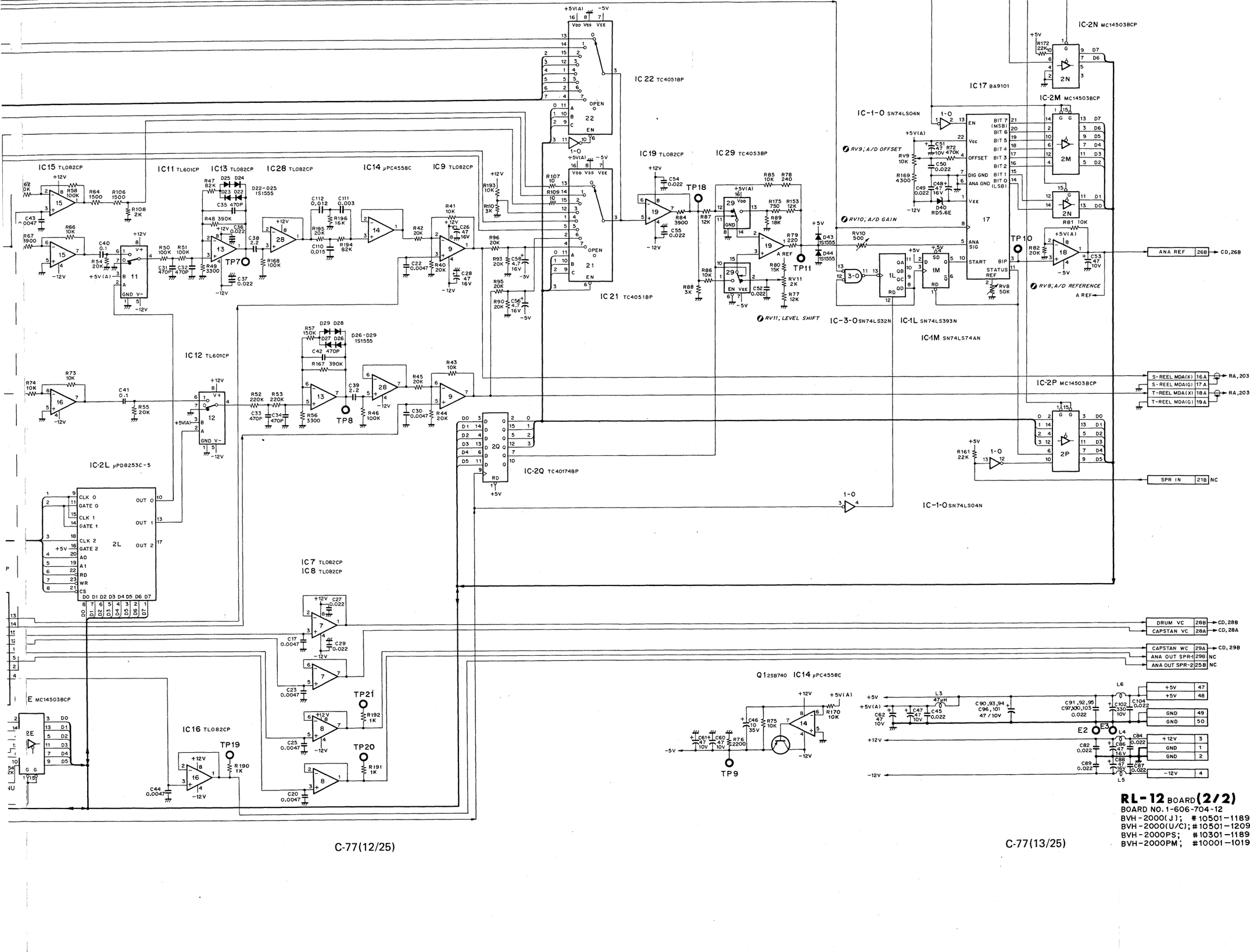

C-77(12/25)

C-77(13/25)

RL-12 BOARD (2/2)
BOARD NO. 1-606-704-12
BVH-2000(J); #10501-11899
BVH-2000(U/C); #10501-12099
BVH-2000PS; #10301-11899
BVH-2000PM; #10001-10199

RL-12 BOARD (1-606-704-13)

Component Side

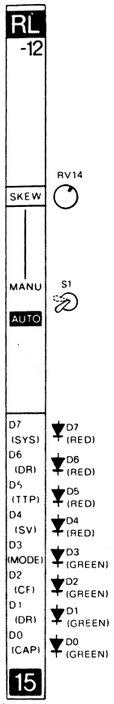

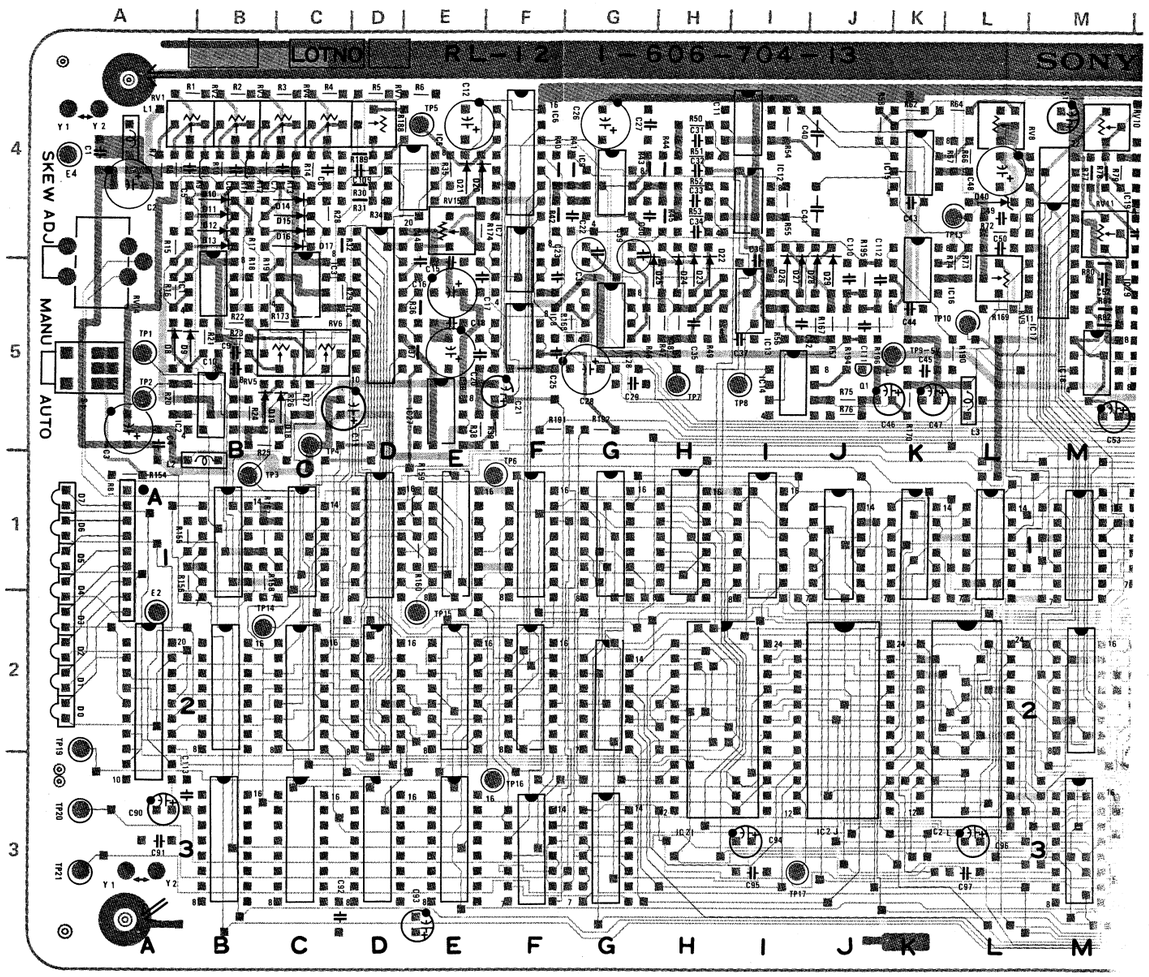

■ 1-606-704-13 COMPONENT SIDE

RB1

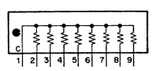

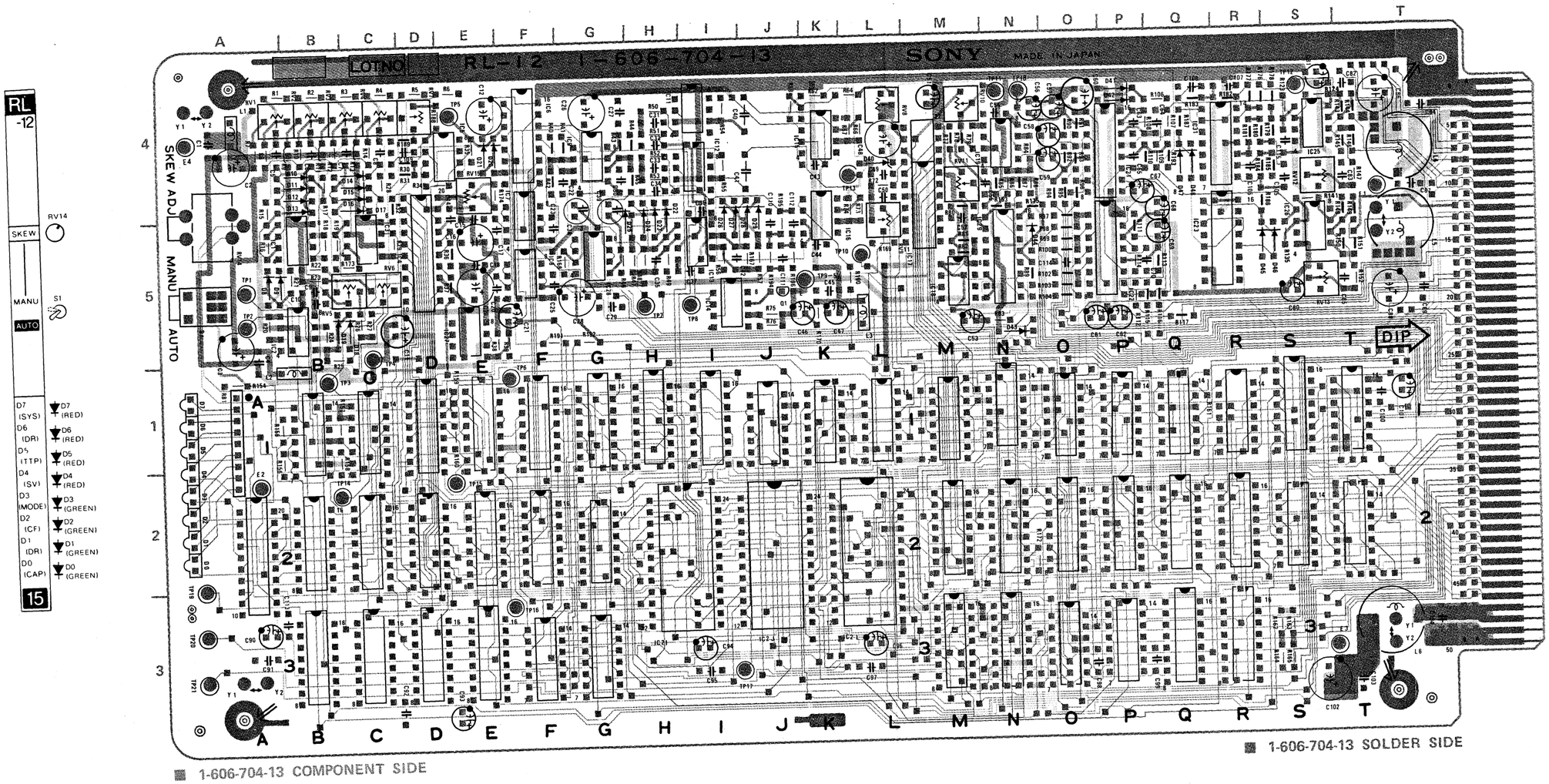

■ 1-606-704-13 COMPONENT SIDE

■ 1-606-704-13 SOLDER SIDE

RB1

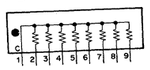

RL-12 (1-606-704-13 & UP)

BVH-2000(J,U/C)
BVH-2000PS
BVH-2000PM
BVH-2500(J,U/C)

D0	2A	IC3	5C
D1	2A	IC3F	
D2	2A	IC3G	
D3	2A	IC3M	
D4	1A	IC3N	
D5	1A	IC3O	
D6	1A	IC3P	
D7	1A	IC4	5D
D8	5A	IC5	4E
D9	5A	IC6	4F
D10	4B	IC7	4F
D11	4B	IC8	5F
D12	4B	IC9	4G
D13	4B	IC11	4I
D14	4C	IC12	4I
D15	4C	IC13	5I
D16	4C	IC14	5I
D17	4C	IC15	4K
D18	5C	IC16	5K
D19	5B	IC17	5M
D20	4E	IC18	5M
D21	4E	IC19	4N
D22	5H	IC21	4P
D23	5H	IC22	5P
D24	5H	IC23	5R
D25	5H	IC25	4S
D26	5I	IC26	5S
D27	5I	IC27	5E
D28	5J	IC28	5G
D29	5J	IC29	5N
D40	4I	IC31	4R
D43	5N		
D44	5N	Q1	5J
D45	5S		
D46	5S	RB1	1A
D47	4Q		
D48	4Q	RV1	4A
D50	5H	RV2	4B
D51	5H	RV3	4C
		RV4	4C
E1	4T	RV5	5C
E2	2A	RV6	5C
E3	3T	RV7	4D
E4	4A	RV8	4L
		RV9	5L
IC1	5B	RV10	4M
IC1B		RV11	4M
IC1C		RV12	4S
IC1D		RV13	5S
IC1E		RV14	5A
IC1F		RV15	4E
IC1G		RV20	4O
IC1H			
IC1I		S1	5A
IC1J			
IC1K		TP1	5A
IC1L		TP2	5A
IC1M		TP3	1B
IC1N		TP4	5C
IC1O		TP5	4E
IC1P		TP6	1F
IC1Q		TP7	5H
IC1R		TP8	5I
IC1S		TP9	5K
IC1T		TP10	5L
IC2	5B	TP11	4N
IC2A		TP12	4S
IC2C		TP13	4L
IC2D		TP14	2B
IC2E		TP15	2E
IC2F		TP16	3F
IC2G		TP17	3I
IC2I		TP18	4N
IC2J		TP19	2A
IC2L		TP20	3A
IC2M		TP21	3A
IC2N			
IC2O			
IC2P			
IC2Q			
IC2R			
IC2S			
IC2T			

RL-12 BOARD (1/2)

Reel Servo

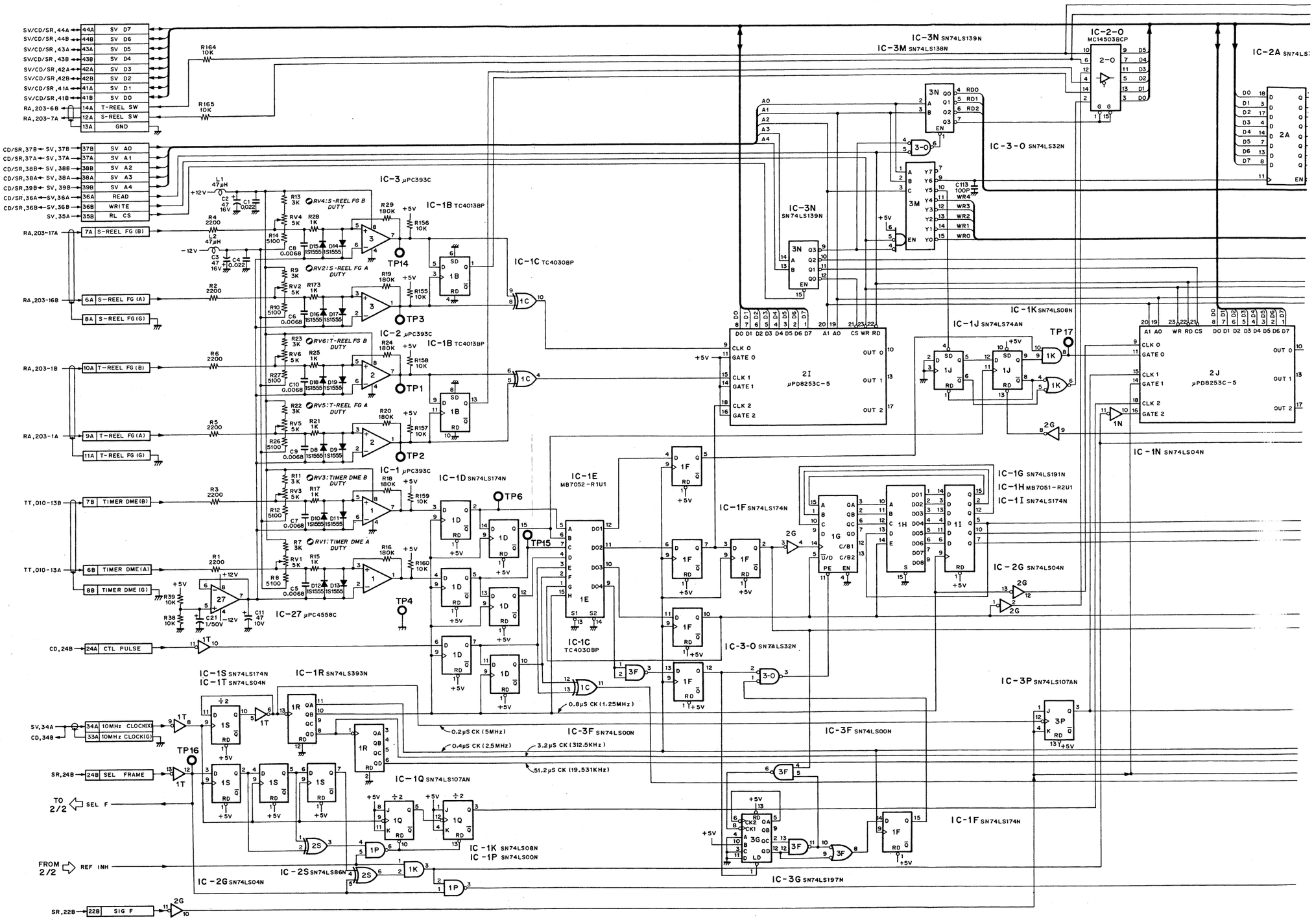

C-77(17/25)

C-77(18/25)

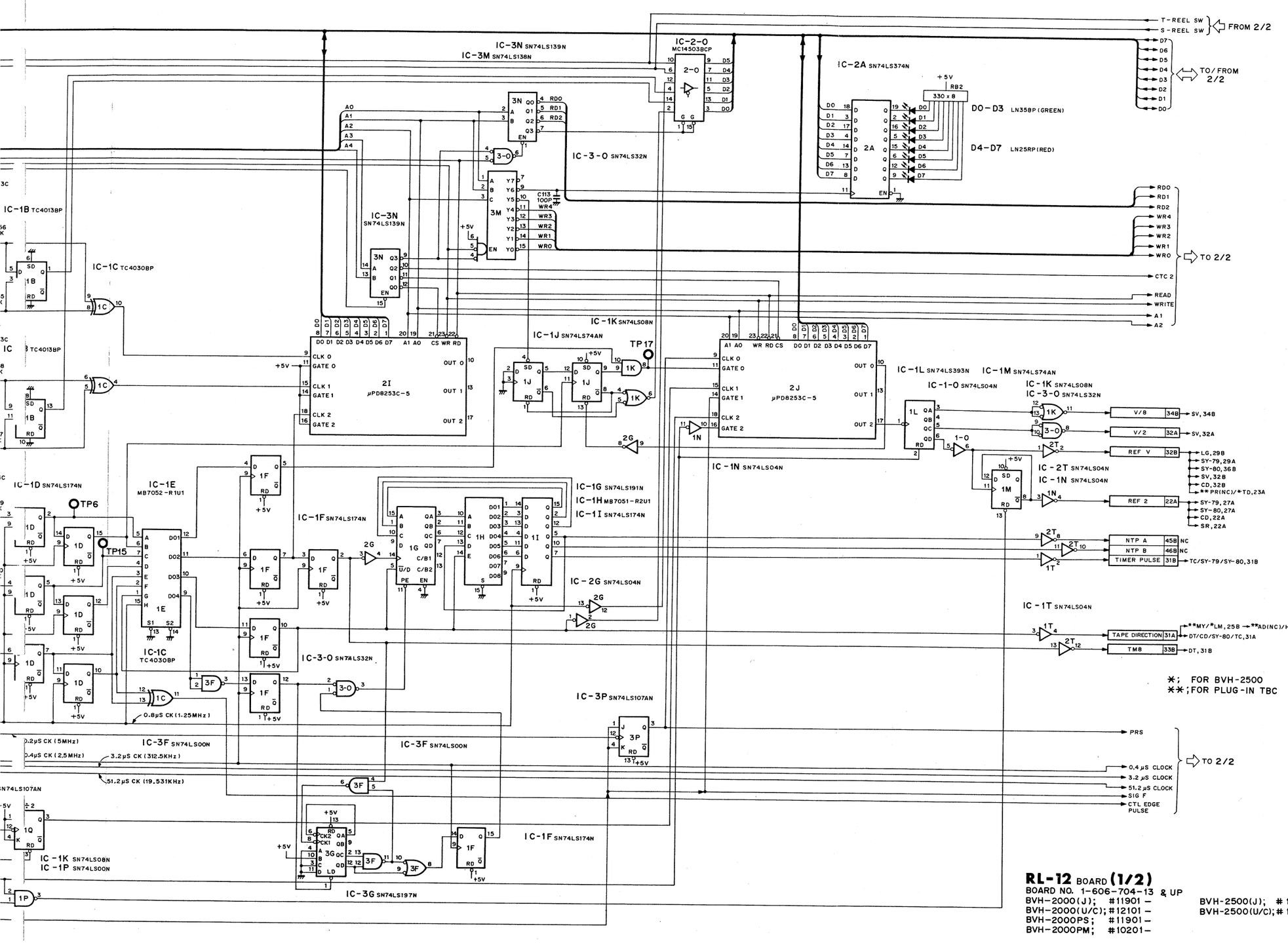

*; FOR BVH-2500
**; FOR PLUG-IN TBC

RL-12 BOARD (1/2)
BOARD NO. 1-606-704-13 & UP
BVH-2000(J); #11901 –
BVH-2000(U/C); #12101 –
BVH-2000PS; #11901 –
BVH-2000PM; #10201 –

BVH-2500(J); # 10001-
BVH-2500(U/C); # 10001-

RL-12 BOARD (2/2)

Reel Servo

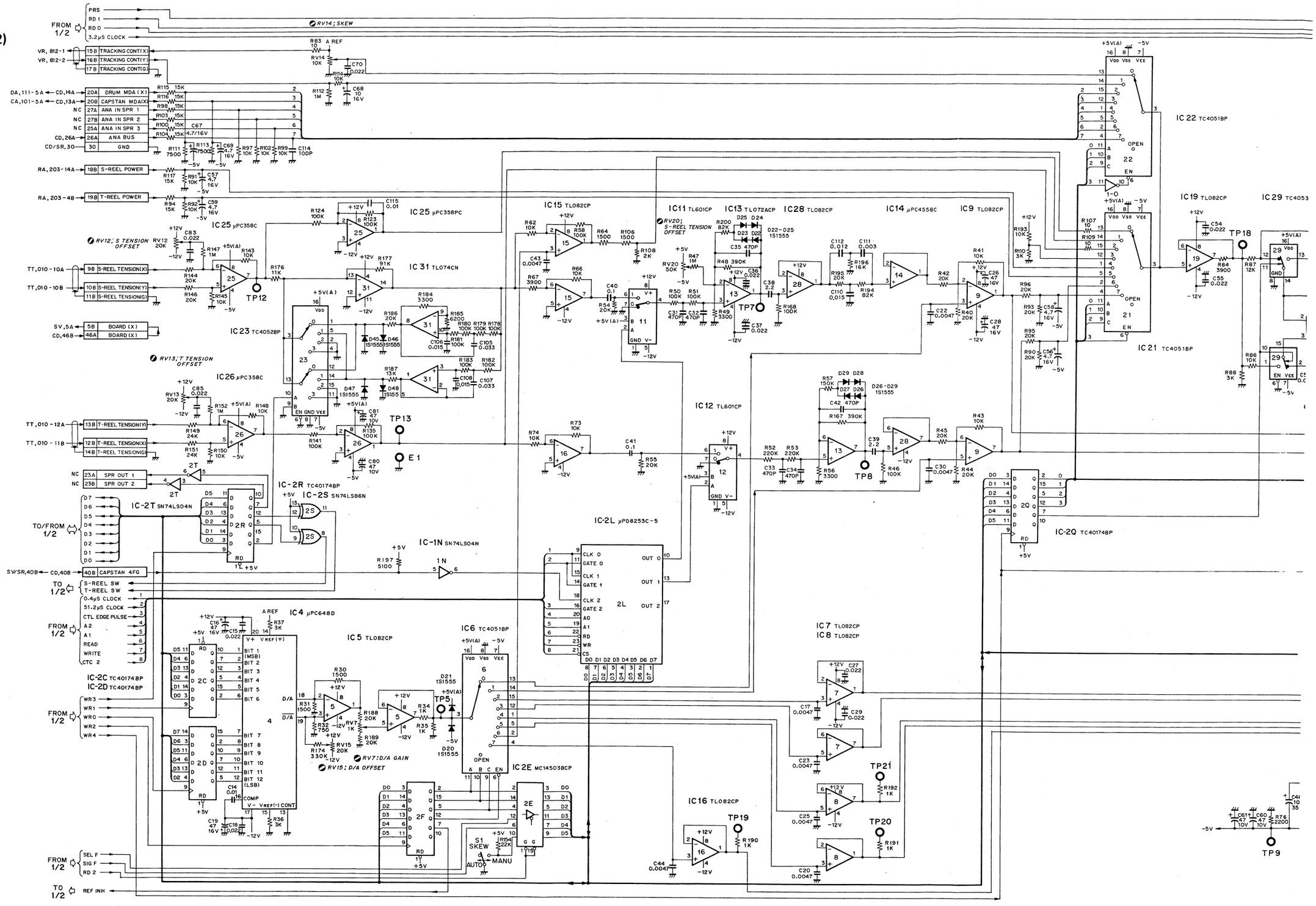

1-606-704-13 & UP CARD RACK RL-12 (2/2)

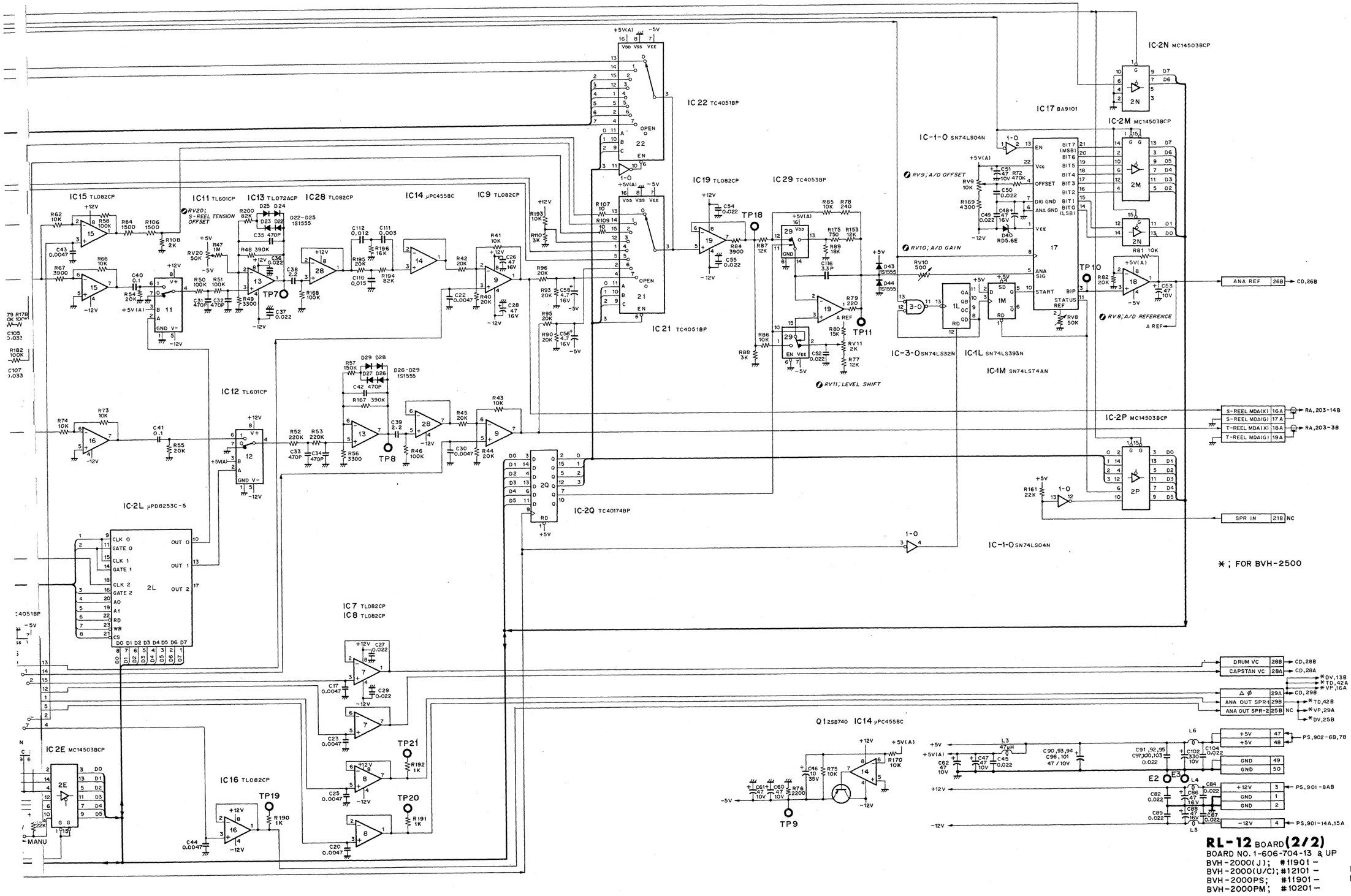

RL-12 BOARD (2/2)
BOARD NO. 1-606-704-13 & UP
BVH-2000(J); #11901 –
BVH-2000(U/C); #12101 –
BVH-2000PS; #11901 –
BVH-2000PM; #10201 –

BVH-2500(J); #10001-
BVH-2500(U/C); #10001-

CD-17 BOARD (1-606-705-11)

Component Side

BVH-2000PS

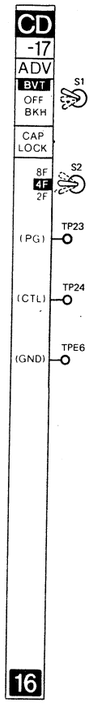

BVH-2000 (J, U/C)

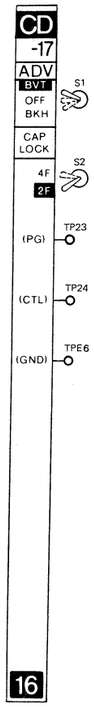

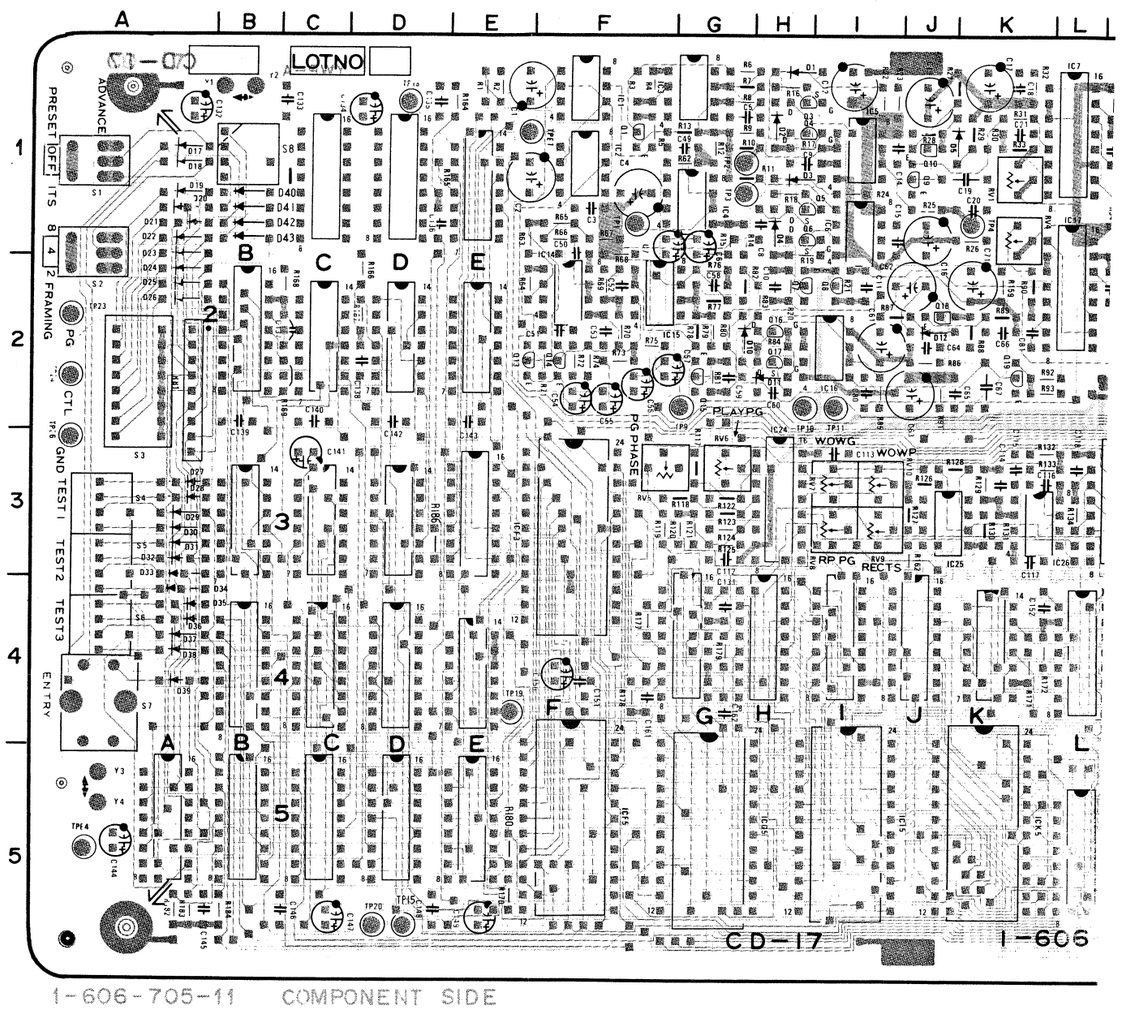

1-606-705-11 COMPONENT SIDE

S4, 5, 6

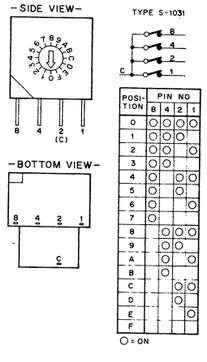

S8

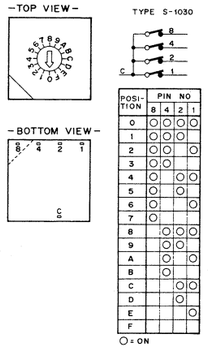

RB1

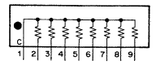

I)

B H-2000PS

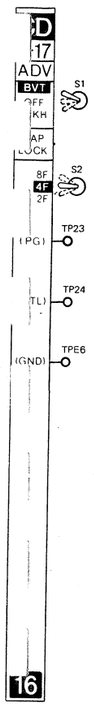

BVH-2000 (J, U/C)

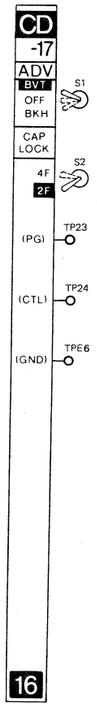

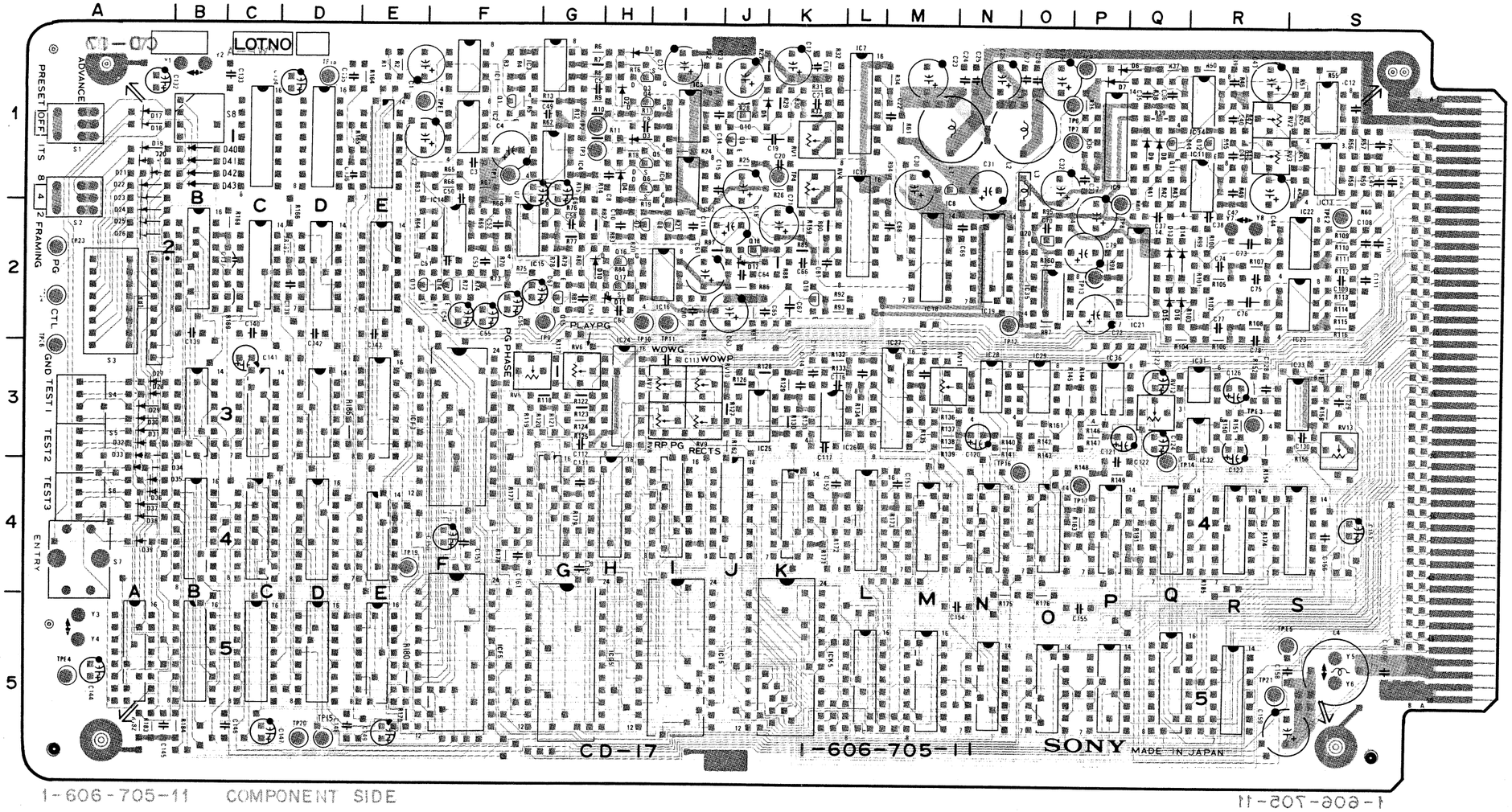

S4, 5, 6

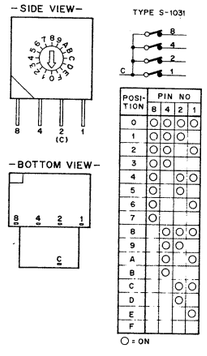

S8

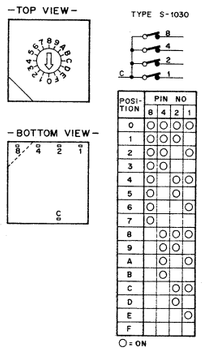

RB1

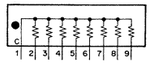

CD-17 (1-606-705-11)

BVH-2000(J,U/C)			IC14	2F	
BVH-2000PS			IC15	2F	
			IC16	2I	
D1	1H		IC17	2L	
D2	1H		IC18	2M	
D3	1H		IC19	2N	
D4	1H		IC21	2Q	
D5	1K		IC22	2S	
D6	1Q		IC23	2S	
D7	1P		IC24	3H	
D8	1Q		IC25	3J	
D9	1Q		IC26	3K	
D10	2G				
D11	2H		(PS)		
D12	2J		IC27	3M	
D13	2Q				
D14	2R		IC28	3N	
D15	2Q		IC29	3Q	
D16	2R		IC31	3R	
D17	1A		IC32	3R	
D18	1A		IC33	3S	
D19	1A		IC34	1R	
D20	1A		IC35	2Q	
D21	1A				
D22	1A		(PS)		
D23	1A		IC36	3P	
D24	2A				
D25	2A		Q1	1F	
D26	2A		Q3	1H	
D27	3A		Q4	1H	
D28	3A		Q5	1H	
D29	3A		Q6	1H	
D30	3A		Q7	2H	
D31	3A		Q8	2I	
D32	3A		Q9	1J	
D33	3A		Q10	1J	
D34	4A		Q11	1Q	
D35	4A		Q12	1R	
D36	4A		Q13	2E	
D37	4A		Q15	2G	
D38	4A		Q16	2H	
D39	4A		Q17	2H	
D40	1B		Q18	2J	
D41	1B		Q19	2K	
D42	1B		Q20	2O	
D43	1B				
			RB1	2A	
(PS)					
D44	4B		RV1	1K	
			RV2	1R	
IC1	1F		RV3	1R	
IC1E			RV4	1K	
IC2	1F		RV5	3F	
IC2B			RV6	3G	
IC2C			RV7	3I	
IC2D			RV8	3I	
IC2E			RV9	3I	
IC3	1G		RV10	3I	
IC3B			RV11	3M	
IC3C			RV12	3Q	
IC3D			RV13	3S	
IC3E					
IC3F			S1	1A	
IC4	1G		S2	1A	
IC4B			S3	2A	
IC4C			S4	3A	
IC4D			S5	3A	
IC4E			S6	4A	
IC4G			S7	4A	
IC4H			S8	1B	
IC4I					
IC4J			TP1	1P	
IC4K			TP2	1G	
IC4L			TP3	1G	
IC4M			TP4	1K	
IC4N			TP5	1P	
IC4O			TP6	1F	
IC4P			TP7	1F	
IC4Q			TP8	1P	
IC4R			TP9	2G	
IC4S			TP10	2H	
IC5	1I		TP11	2I	
IC5A			TP12	2N	
IC5B			TP13	2P	
IC5C			TP14	3Q	
IC5D			TP15	5U	
IC5E			TP16	4O	
IC5F			TP17	4P	
IC5G			TP18	1D	
IC5I			TP19	4E	
IC5K			TP20	5D	
IC5L			TP21	5R	
IC5M			TP23	2A	
IC5N			TP24	2A	
IC5O					
IC5P			TPE1	1E	
IC5Q			TPE2	2S	
IC5R			TPE3	3R	
IC6	1I		TPE4	5A	
IC7	1L		TPE5	5S	
IC8	1M		TPE6	3A	
IC9	1P				
IC11	1R				
IC12	1S				
IC13	1S				

CD-17 BOARD (1/2)

Capstan/Drum Servo

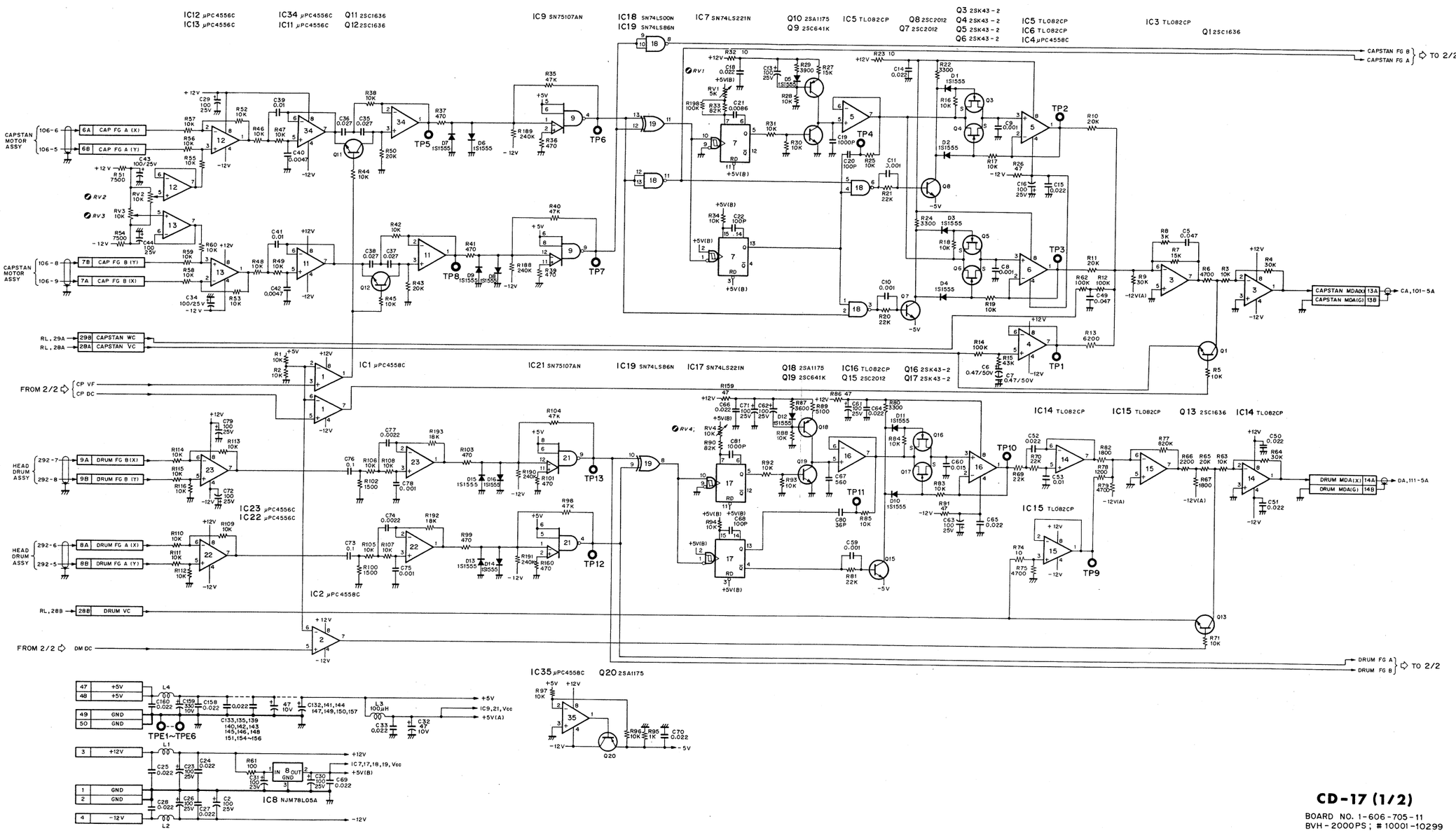

CD-17 (1/2)

BOARD NO. 1-606-705-11
BVH-2000PS ; # 10001-10299

1-606-705-11 CARD RACK CD-17 (1/2)

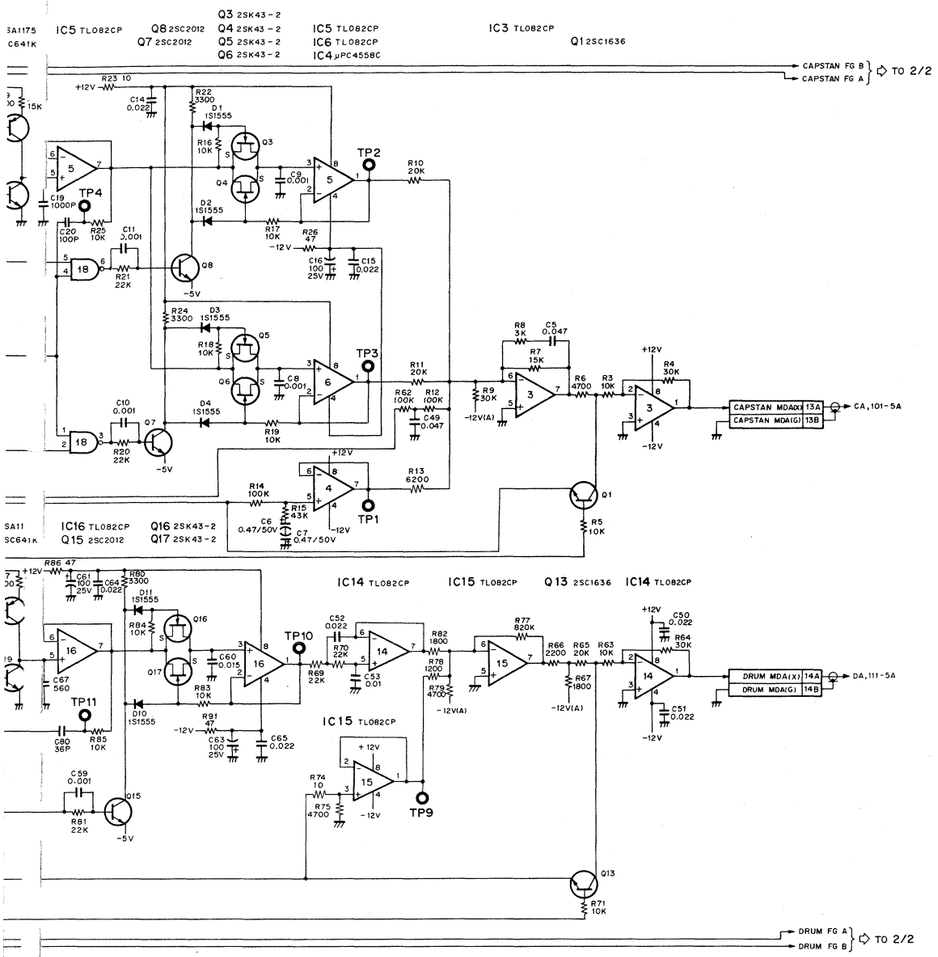

CD-17 (1/2)

BOARD NO. 1-606-705-11
BVH-2000PS ; # 10001-10299

CD-17 BOARD (2/2)

Capstan/Drum Servo

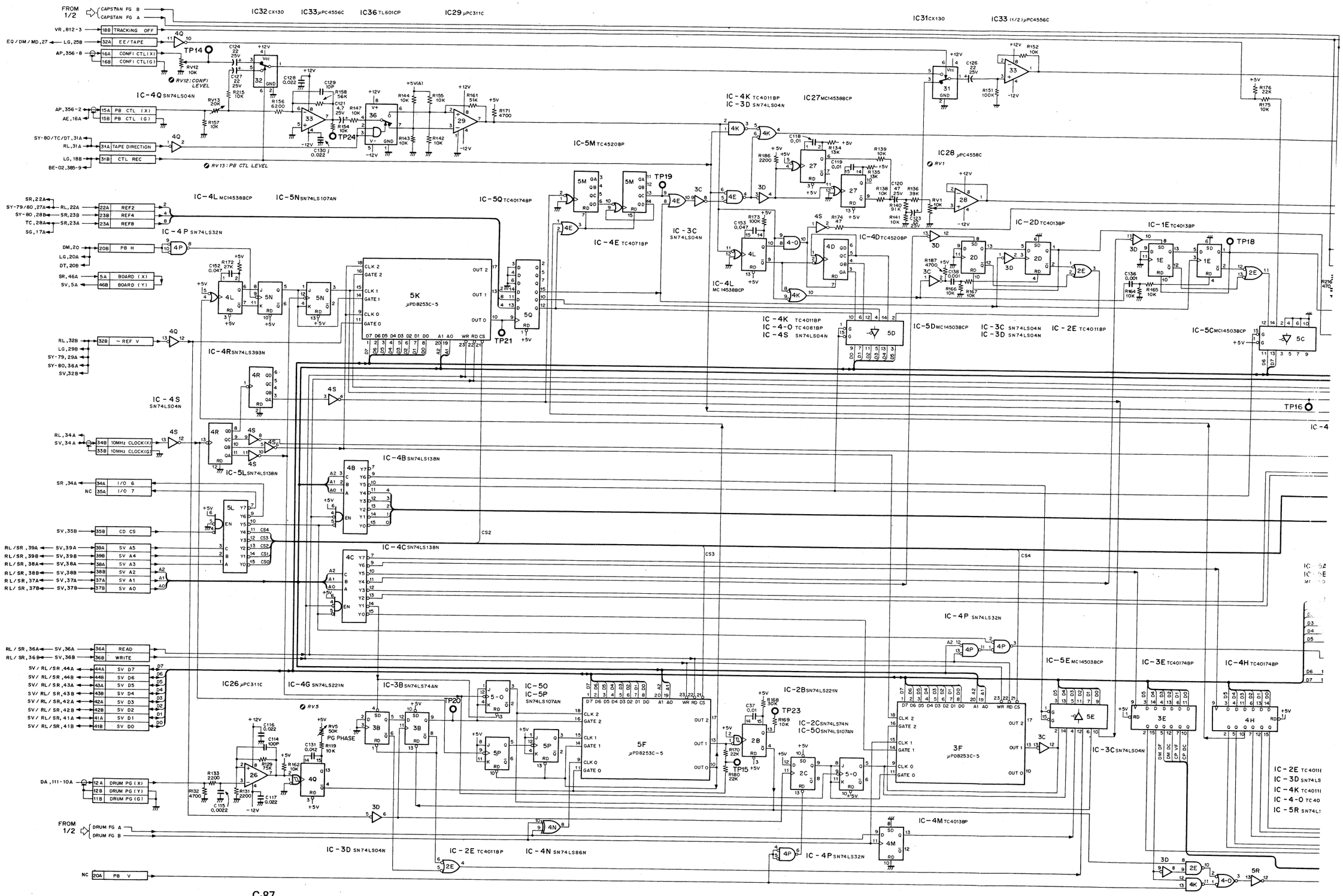

1-606-705-11 CARD RACK CD-17 (2/2)

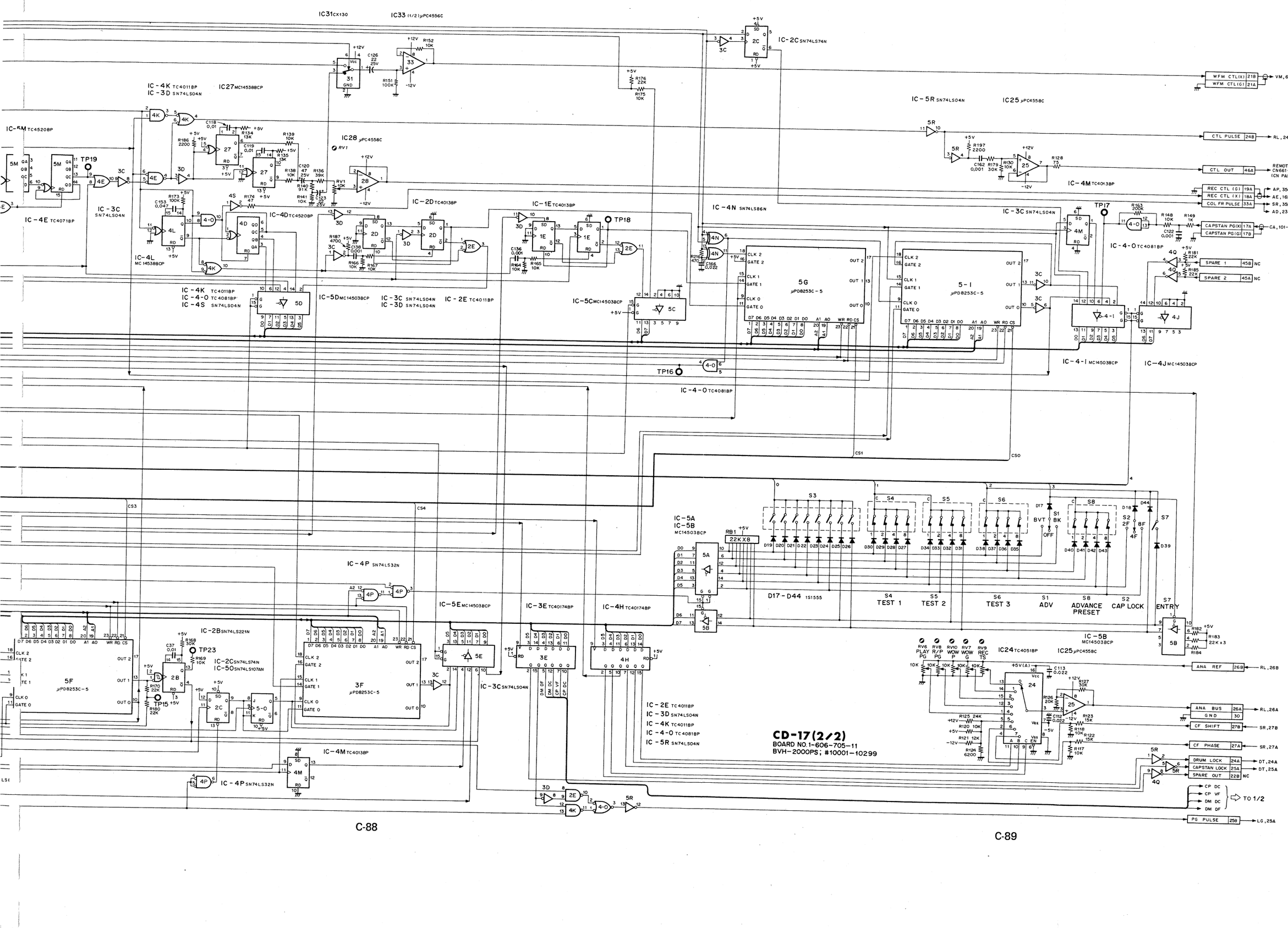

CD-17 BOARD (1-606-705-12)

Component Side

BVH-2000PS
BVH-2000PM

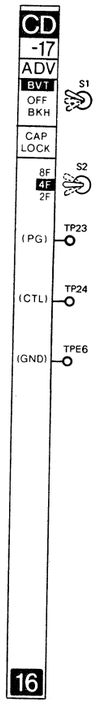

BVH-2000
(J, U/C)

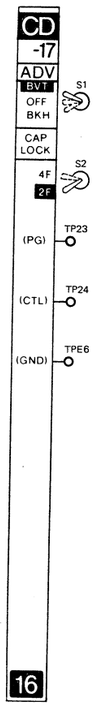

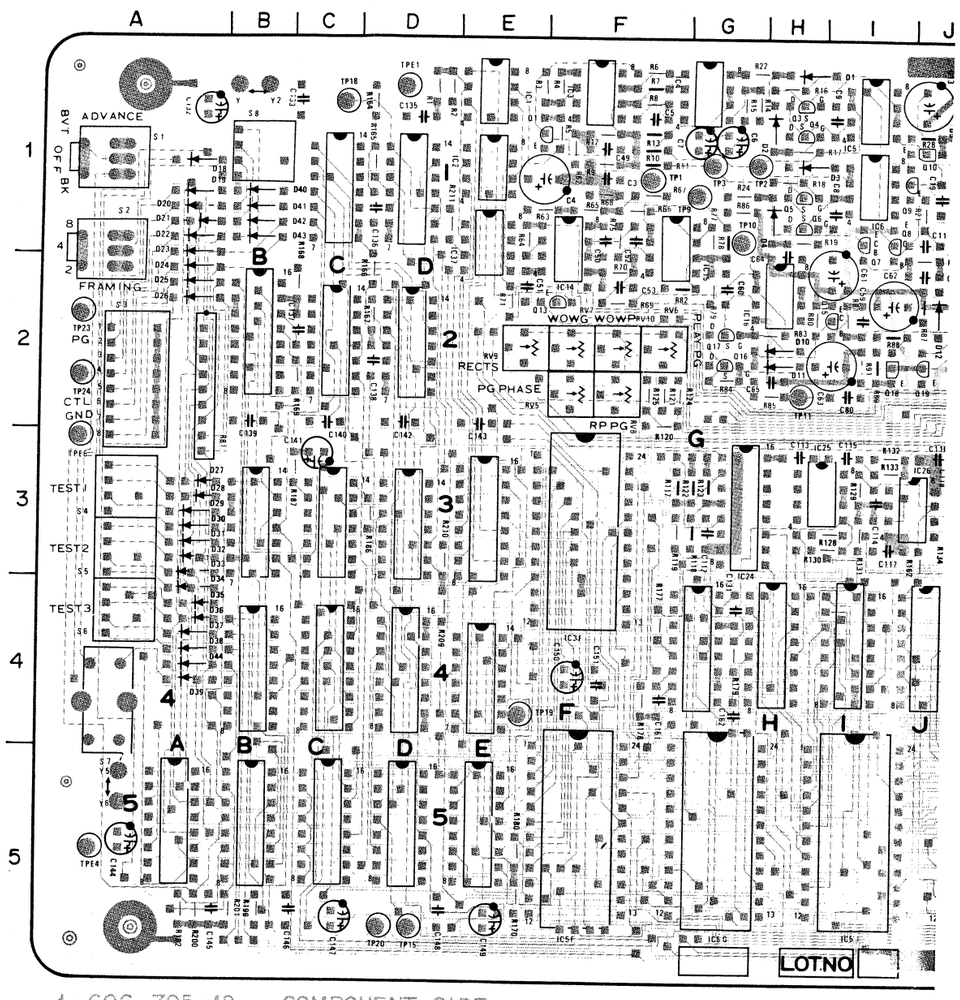

1-606-705-12 COMPONENT SIDE

S4, 5, 6

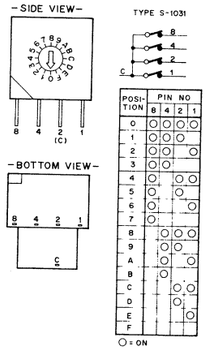

S8

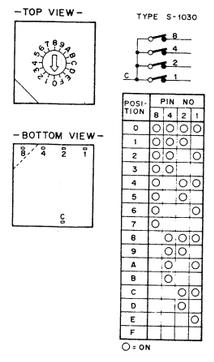

RB1

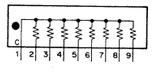

'H- 00PS
'H-2000PM

BVH-2000
(J, U/C)

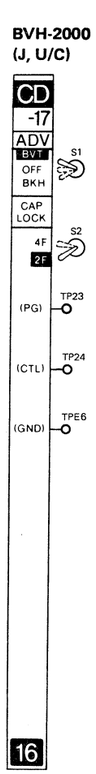

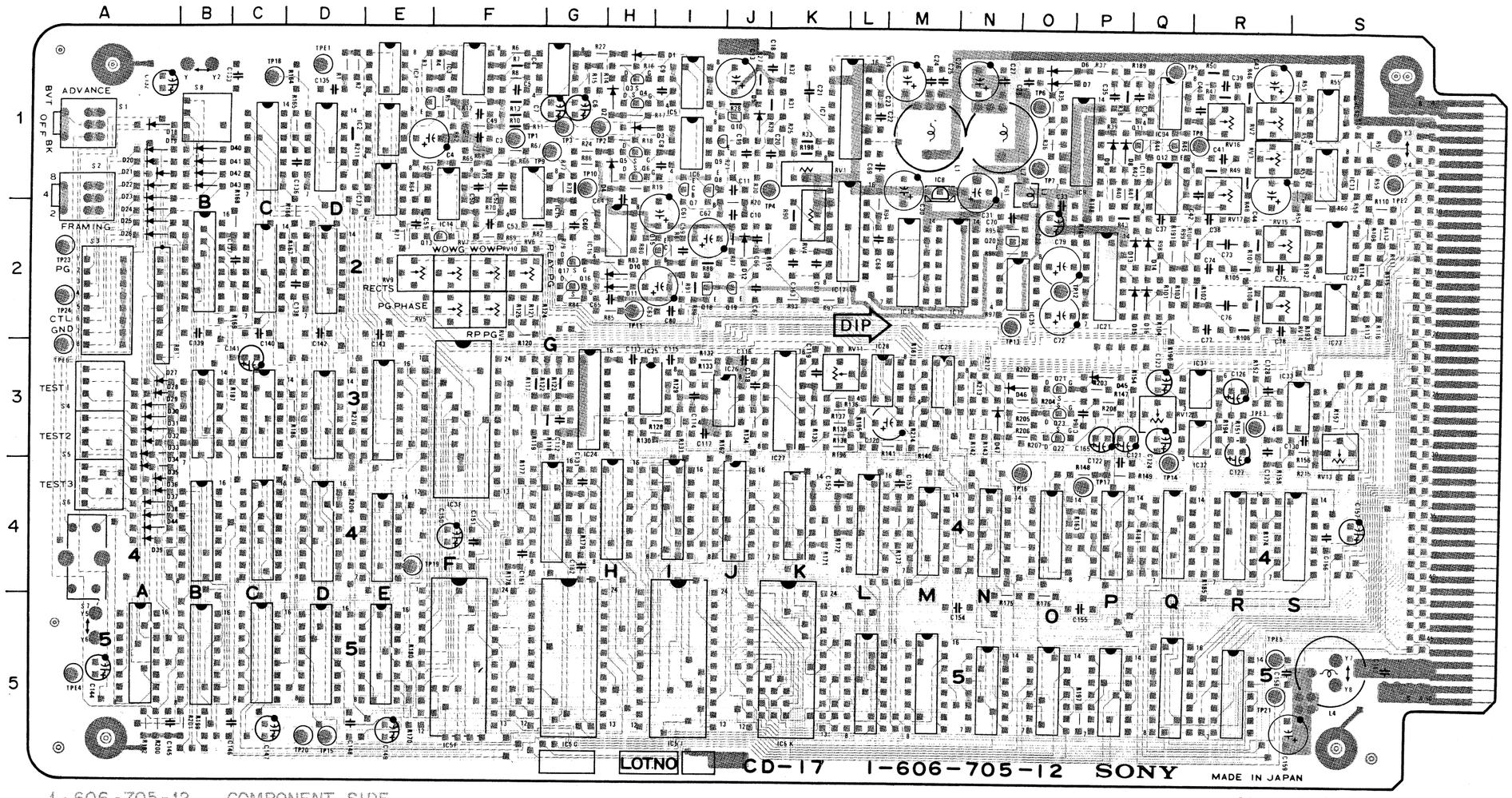

1-606-705-12 COMPONENT SIDE

1-606-705-12

CD-17 (1-606-705-12)

BVH-2000(J,U/C) BVH-2000PS			
D1	1H	IC14	1F
D2	1H	IC15	1F
D3	1H	IC16	2H
D4	1H	IC17	2L
D5	1K	IC18	2M
D6	1O	IC19	2N
D7	1O	IC21	2P
D8	1P	IC22	2S
D9	1P	IC23	2S
D10	2H	IC24	3G
D11	2H	IC25	3J
D12	2J	IC26	3J
D13	2Q	(PS)	
D14	2Q	IC27	3K
D15	2Q	IC28	3L
D16	2Q	IC29	3M
D18	1A	IC31	3R
D19	1A	IC32	3R
D20	1A	IC33	3S
D21	1A	IC34	1Q
D22	1A	IC35	2N
D23	1A	IC37	1E
D24	2A	Q1	1E
D25	2A	Q3	1H
D26	2A	Q4	1H
D27	3A	Q5	1H
D28	3A	Q6	1H
D29	3A	Q7	1I
D30	3A	Q8	1I
D31	3A	Q9	1I
D32	3A	Q10	1J
D33	3A	Q11	1Q
D34	4A	Q12	1Q
D35	4A	Q13	2F
D36	4A	Q15	2I
D37	4A	Q16	2G
D38	4A	Q17	2G
D39	4A	Q18	2I
D40	1B	Q19	2J
D41	1B	Q20	2N
D42	1B	Q21	3O
D43	1B	Q22	3O
(PS)		(PS)	
D44	4A	Q23	3O
D45	3P	RB1	2A
(PS)		RV1	1K
D46	3N	RV2	1R
		RV3	1R
D47	3N	RV4	1K
		RV5	2F
IC1	1E	RV6	2F
IC1C		RV7	2F
IC1D		RV8	2F
IC2	1E	RV9	2E
IC2B		RV10	2F
IC2C		RV11	3K
IC2D		RV12	3Q
IC3	1F	RV13	3S
IC3B		RV14	2R
IC3C		RV15	2R
IC3D		RV16	1R
IC3E		RV17	1R
IC3F			
IC4	1G	S1	1A
IC4B		S2	1A
IC4C		S3	2A
IC4D		S4	3A
IC4E		S5	3A
IC4G		S6	4A
IC4H		S7	4A
IC4I		S8	1B
IC4J			
IC4K		TP1	1F
IC4L		TP2	1G
IC4M		TP3	1G
IC4N		TP4	1K
IC4O		TP5	1Q
IC4P		TP6	1O
IC4Q		TP7	1O
IC4R		TP8	1R
IC4S		TP9	1G
IC5	1I	TP10	1H
IC5A		TP11	2H
IC5B		TP12	2O
IC5C		TP13	2N
IC5D		TP14	3Q
IC5E		TP15	5D
IC5F		TP16	4O
IC5G		TP17	4P
IC5I		TP18	1C
IC5K		TP19	4E
IC5L		TP20	5D
IC5M		TP21	5R
IC5N		TP23	2A
IC5O		TP24	2A
IC5P			
IC5Q		TPE1	1D
IC5R		TPE2	1S
IC6	1I	TPE3	3R
IC7	1L	TPE4	5A
IC8	1M	TPE5	5R
IC9	1P	TPE6	3A
IC11	1Q		
IC12	1S		
IC13	1S		

S4, 5, 6

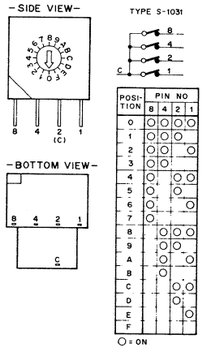

S8

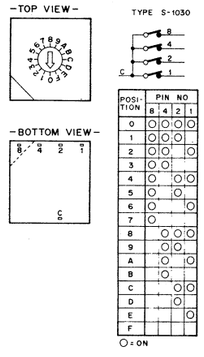

RB1

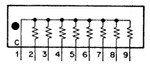

C-89(3/25)

C-89(4/25)

CD-17 BOARD (1/2)

Capstan/Drum Servo

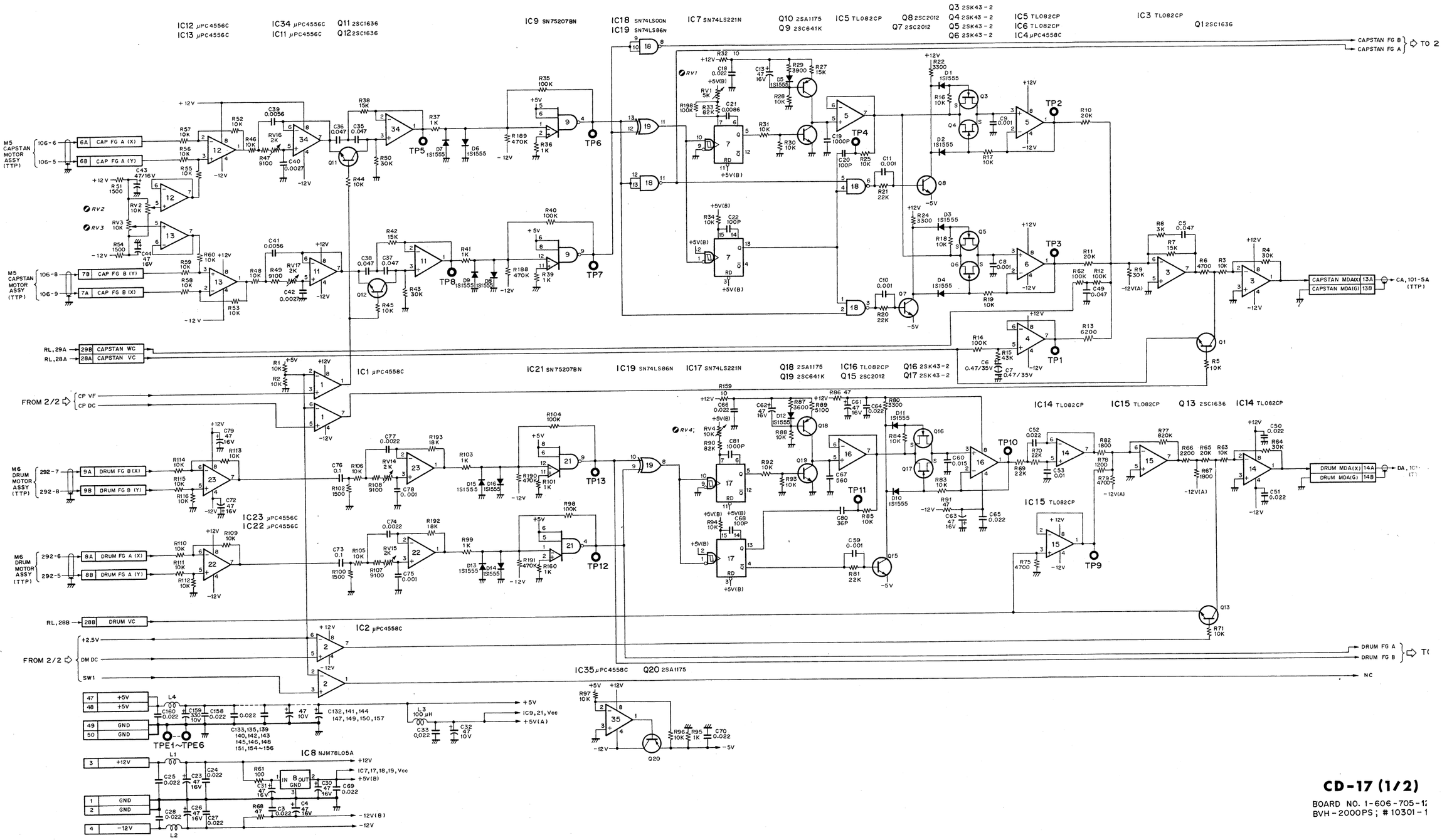

C-89(5/25)

C-89(6/25)

CD-17 (1/2)

BOARD NO. 1-606-705-1
BVH-2000PS ; # 10301-1

1-606-705-12 CARD RACK CD-17 (1/2)

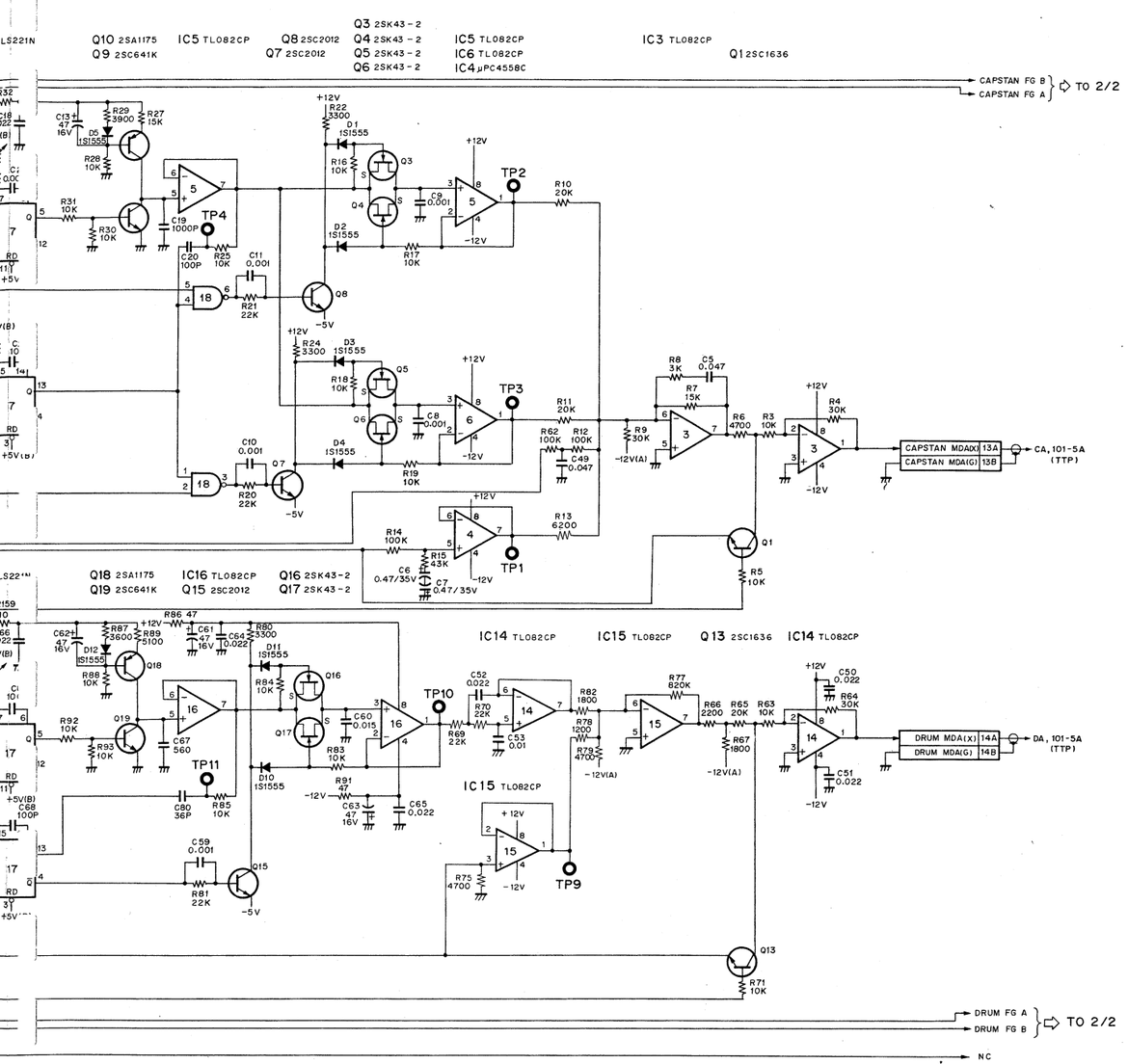

CD-17 (1/2)

BOARD NO. 1-606-705-12
BVH-2000PS ; # 10301-11899

CD-17 BOARD (2/2)

Capstan/Drum Servo

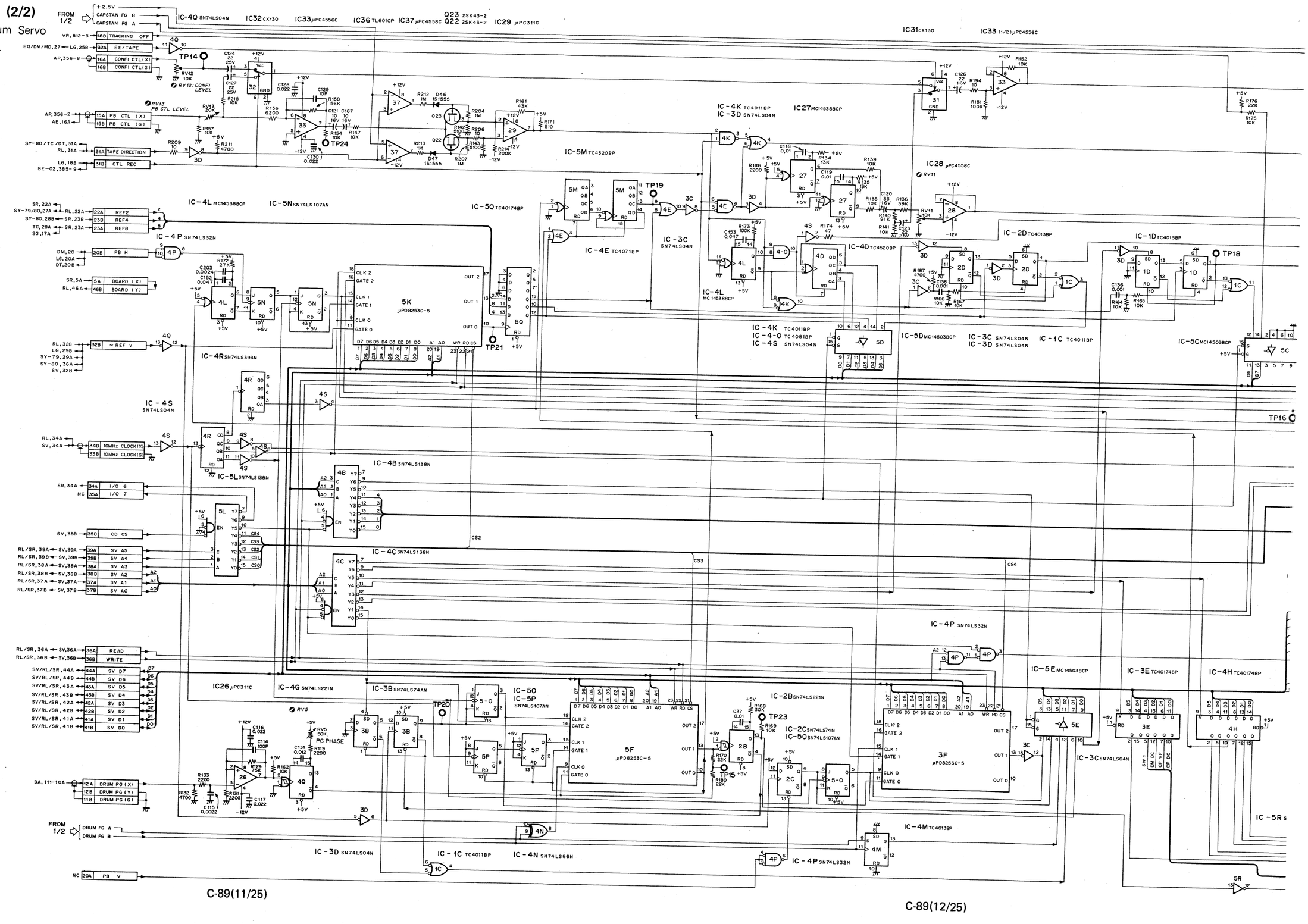

C-89(11/25)

C-89(12/25)

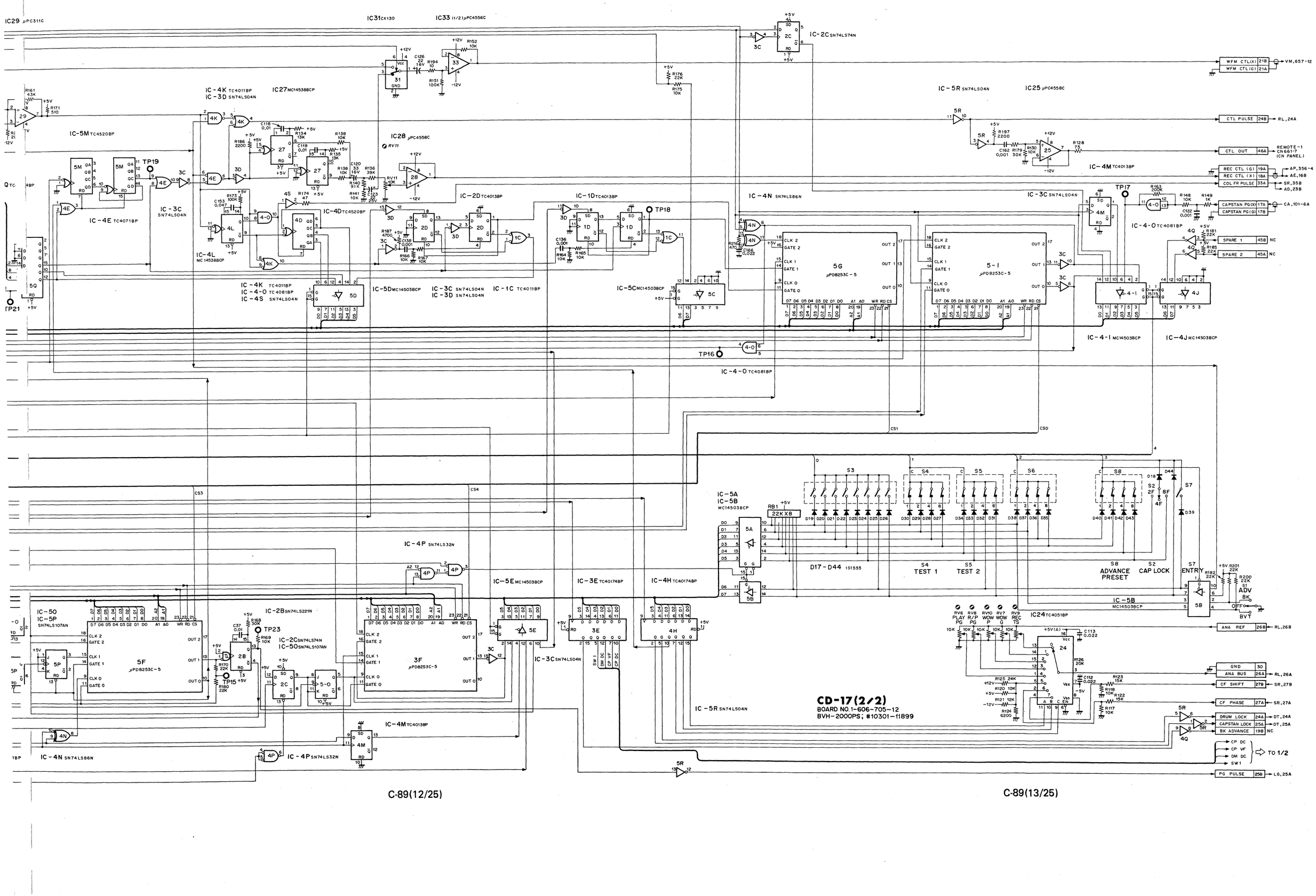
IC29 μPC311C
IC31 CX130
IC33 (1/2)μPC4556C
IC-2C SN74LS74N
IC-5R SN74LS04N
IC25 μPC4558C
IC-4K TC4011BP
IC-3D SN74LS04N
IC27 MC14538BCP
IC-5M TC4520BP
IC28 μPC4558C
RV11
IC-4M TC4013BP
IC-4E TC4071BP
IC-3C SN74LS04N
IC-4D TC4520BP
IC-2D TC4013BP
IC-1D TC4013BP
IC-4N SN74LS86N
IC-3C SN74LS04N
IC-4L MC14538BCP
IC-4K TC4011BP
IC-4-O TC4081BP
IC-4S SN74LS04N
IC-5D MC14503BCP
IC-3C SN74LS04N
IC-3D SN74LS04N
IC-1C TC4011BP
IC-5C MC14503BCP
IC-4-O TC4081BP
IC-4-1 MC14503BCP
IC-4J MC14503BCP
WFM CTL(X) 21B
WFM CTL(G) 21A
CTL PULSE 24B
CTL OUT 46A
REC CTL (G) 19A
REC CTL (X) 18A
COL FR PULSE 33A
CAPSTAN PG(X) 17A
CAPSTAN PG(G) 17B
SPARE 1 45B
SPARE 2 45A
IC-4P SN74LS32N
IC-5E MC14503BCP
IC-3E TC40174BP
IC-4H TC40174BP
IC-5A
IC-5B
MC14503BCP
D17 - D44 1S1555
S3
S4 TEST 1
S5 TEST 2
S8 ADVANCE PRESET
S2 CAP LOCK
S7 ENTRY
IC-5B MC14503BCP
IC-50
IC-5P
SN74LS107AN
IC-2B SN74LS221N
IC-2C SN74LS74N
IC-50 SN74LS107AN
IC-4M TC4013BP
IC-4N SN74LS86N
IC-4P SN74LS32N
IC-5R SN74LS04N
IC24 TC4051BP
ANA REF 26B
GND 30
ANA BUS 26A
CF SHIFT 27B
CF PHASE 27A
DRUM LOCK 24A
CAPSTAN LOCK 25A
BK ADVANCE 19B
PG PULSE 25B
CP DC
CP VF
DM DC
SW 1
TO 1/2
CS0
CS1
CS3
CS4
CD-17(2/2)
BOARD NO.1-606-705-12
BVH-2000PS; #10301-11899

CD-17 BOARD (1-606-705-13)

Component Side

BVH-2000PS
BVH-2000PM

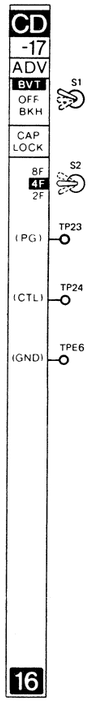

BVH-2000(J,U/C)
BVH-2500(J,U/C)

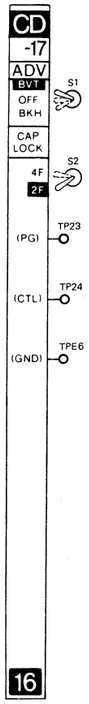

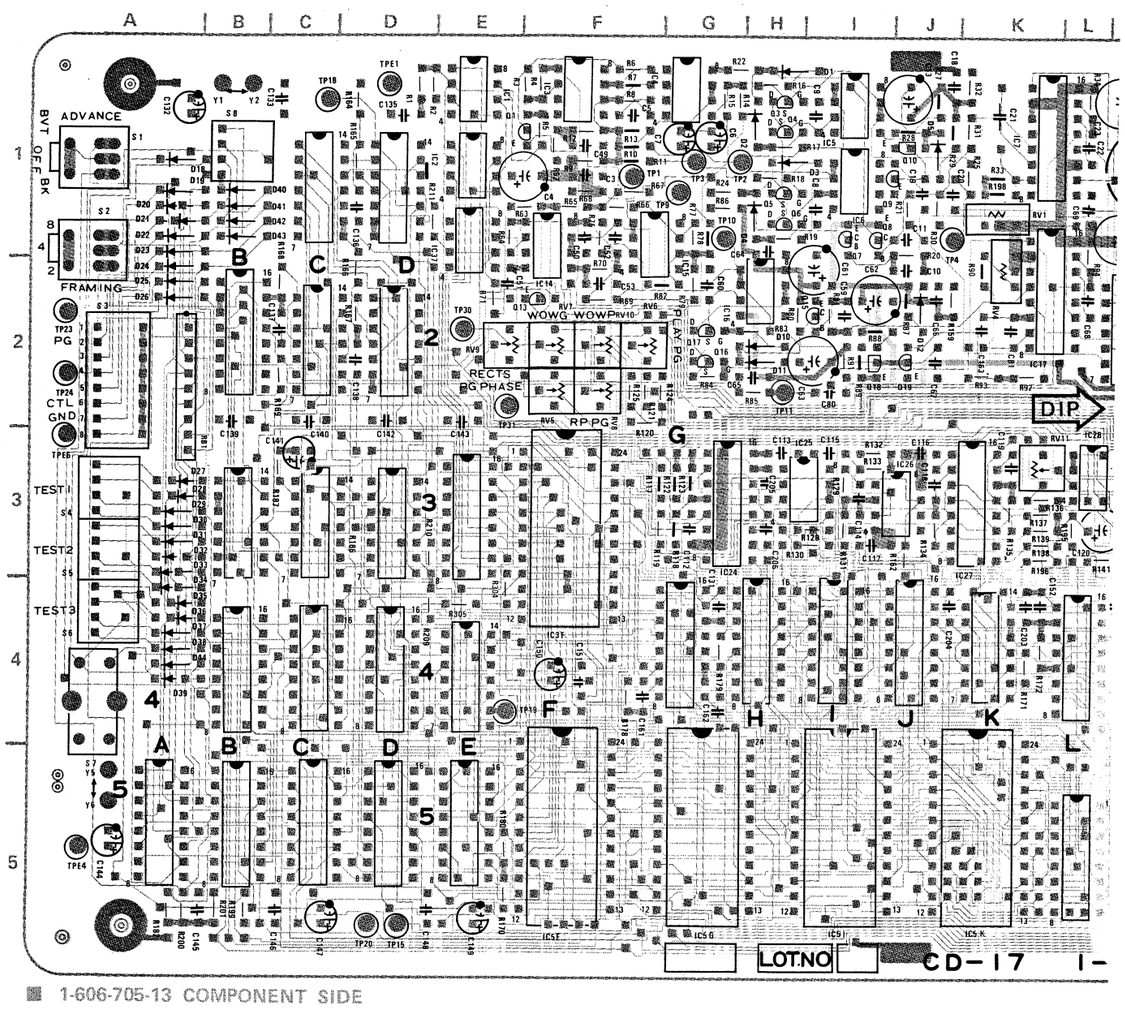

■ 1-606-705-13 COMPONENT SIDE

S4, 5, 6

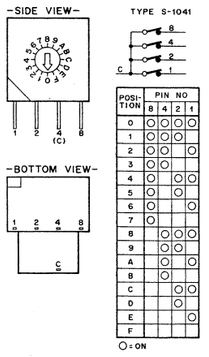

S8

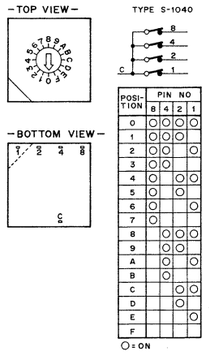

RB1

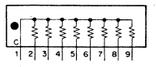

BVH-2000(J,U/C)
BVH-2500(J,U/C)

CD-17
ADV BVT OFF BKH
CAP LOCK
4F 2F
(PG) TP23
(CTL) TP24
(GND) TPE6

16

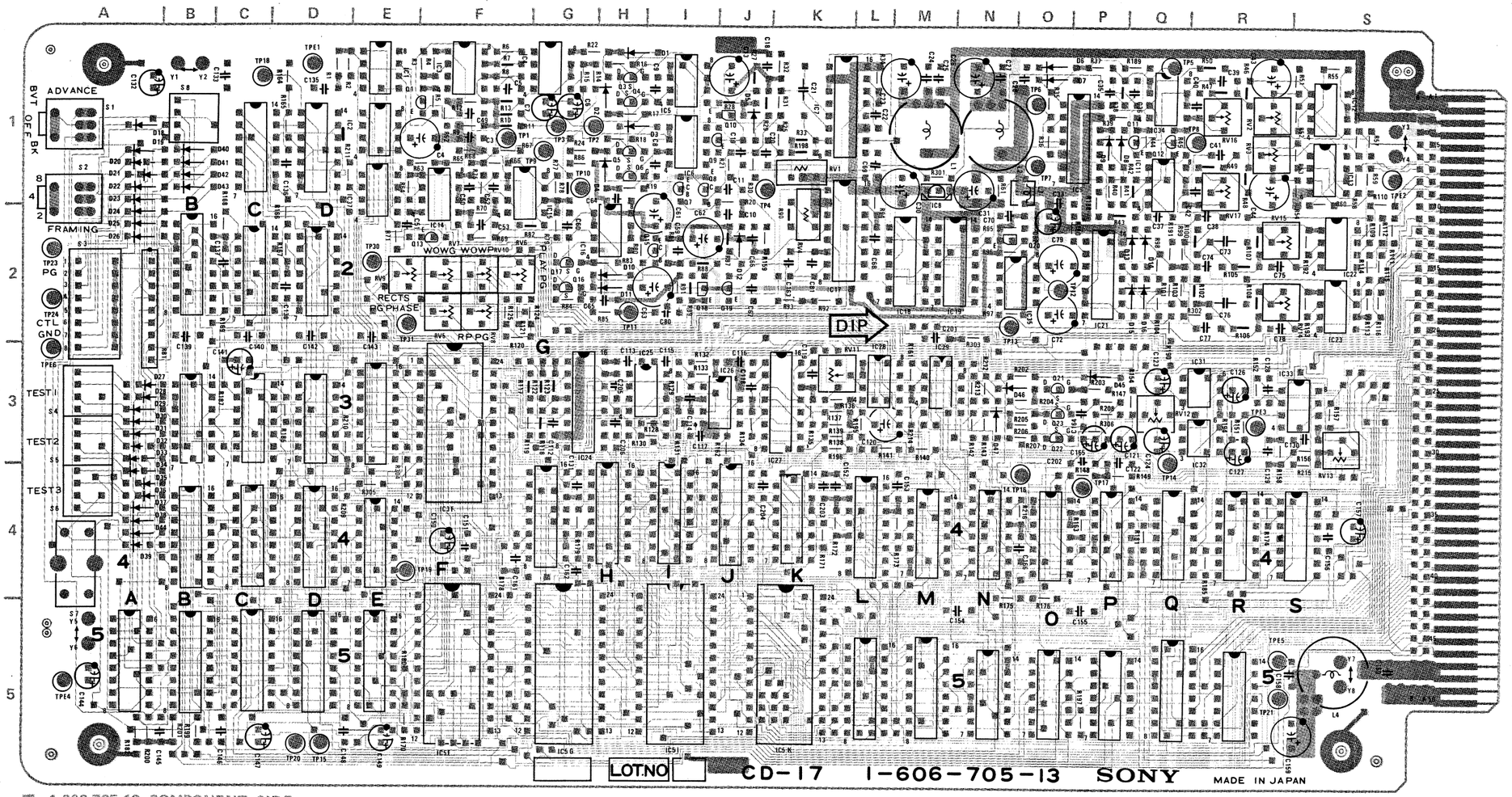

■ 1-606-705-13 COMPONENT SIDE

■ 1-606-705-13 SOLDER SIDE

S4, 5, 6

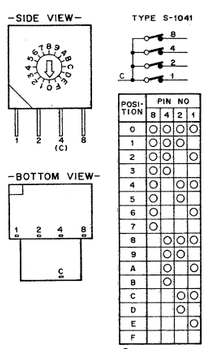

S8

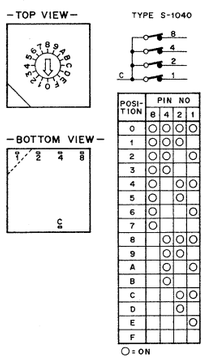

RB1

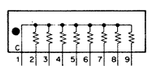

C-89(15/25)

C-89(16/25)

CD-17 (1-606-705-13 & UP)

BVH-2000(J,U/C)
BVH-2000PS
BVH-2000PM
BVH-2500(J,U/C)

(PS)		IC14	1F	
CV1	3R	IC15	1F	
		IC16	2H	
D1	1H	IC17	2K	
D2	1H	IC18	2M	
D3	1H	IC19	2N	
D4	1H	IC21	2P	
D5	1J	IC22	2S	
D6	1O	IC23	2S	
D7	1O	IC24	3G	
D8	1P	IC25	3H	
D9	1P	IC26	3J	
D10	2H			
D11	2H	(PS)		
D12	2J	IC27	3K	
D13	2Q			
D14	2Q	IC28	3L	
D15	2Q	IC29	3M	
D16	2Q	IC31	3R	
D18	1A	IC32	3R	
D19	1A	IC33	3S	
D20	1A	IC34	1Q	
D21	1A	IC35	2O	
D22	1A	IC37	1E	
D23	1A			
D24	2A	Q1	1E	
D25	2A	Q3	1H	
D26	2A	Q4	1H	
D27	3A	Q5	1H	
D28	3A	Q6	1H	
D29	3A	Q7	1I	
D30	3A	Q8	1I	
D31	3A	Q9	1I	
D32	3A	Q10	1J	
D33	3A	Q11	1Q	
D34	4A	Q12	1Q	
D35	4A	Q13	2F	
D36	4A	Q15	2I	
D37	4A	Q16	2G	
D38	4A	Q17	2G	
D39	4A	Q18	2I	
D40	1B	Q19	2J	
D41	1B	Q20	2N	
D42	1B	Q21	3O	
D43	1B	Q22	3O	
		(PS)		
(PS)		Q23	3O	
D44	4A			
D45	3P	RB1	2A	
(PS)		RV1	1K	
D46	3N	RV2	1R	
		RV3	1R	
D47	3N	RV4	2K	
		RV5	2P	
IC1	1E	RV6	2P	
IC1C		RV7	2P	
IC1D		RV8	2P	
IC2	1E	RV9	2E	
IC2B		RV10	2P	
IC2C		RV11	3K	
IC2D		RV12	3Q	
IC3	1F	RV13	3S	
IC3B		RV14	2R	
IC3C		RV15	2R	
IC3D		RV16	1R	
IC3E		RV17	1R	
IC3F				
IC4	1G	S1	1A	
IC4B		S2	1A	
IC4C		S3	2A	
IC4D		S4	3A	
IC4E		S5	3A	
IC4G		S6	4A	
IC4H		S7	4A	
IC4I		S8	1B	
IC4J				
IC4K		TP1	1F	
IC4L		TP2	1G	
IC4M		TP3	1G	
IC4N		TP4	1J	
IC4O		TP5	1Q	
IC4P		TP6	1O	
IC4Q		TP7	1O	
IC4R		TP8	1R	
IC4S		TP9	1G	
IC5	1I	TP10	1G	
IC5A		TP11	2H	
IC5B		TP12	2O	
IC5C		TP13	2N	
IC5D		TP14	3Q	
IC5E		TP15	5D	
IC5F		TP16	4O	
IC5G		TP17	4P	
IC5I		TP18	1C	
IC5K		TP19	4E	
IC5L		TP20	5D	
IC5M		TP21	5R	
IC5N		TP23	2A	
IC5O		TP24	2A	
IC5P		TP30	2E	
IC5Q		TP31	2E	
IC5R				
IC6	1I	TPE1	1D	
IC7	1K	TPE2	1S	
IC8	1M	TPE3	3R	
IC9	1P	TPE4	5A	
IC11	1Q	TPE5	5R	
IC12	1S	TPE6	3A	
IC13	1S			

C-89(16/25) C-89(15/25) C-89(14/25) BVH-2000/PS C-114 C-115 C-116 BVH-2500

CD-17 BOARD (1/2)

Capstan/Drum Servo

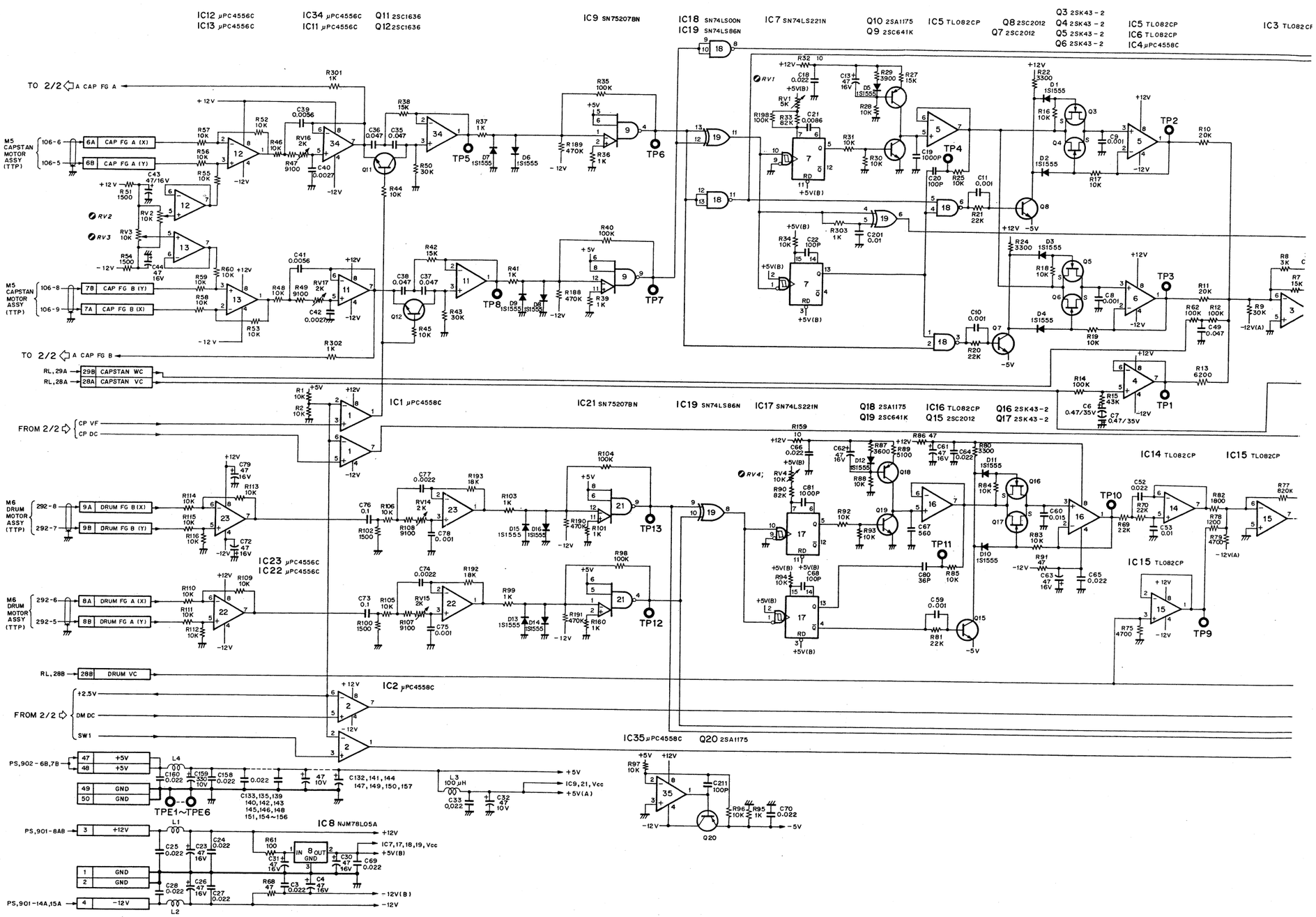

C-89(17/25)

C-89(18/25)

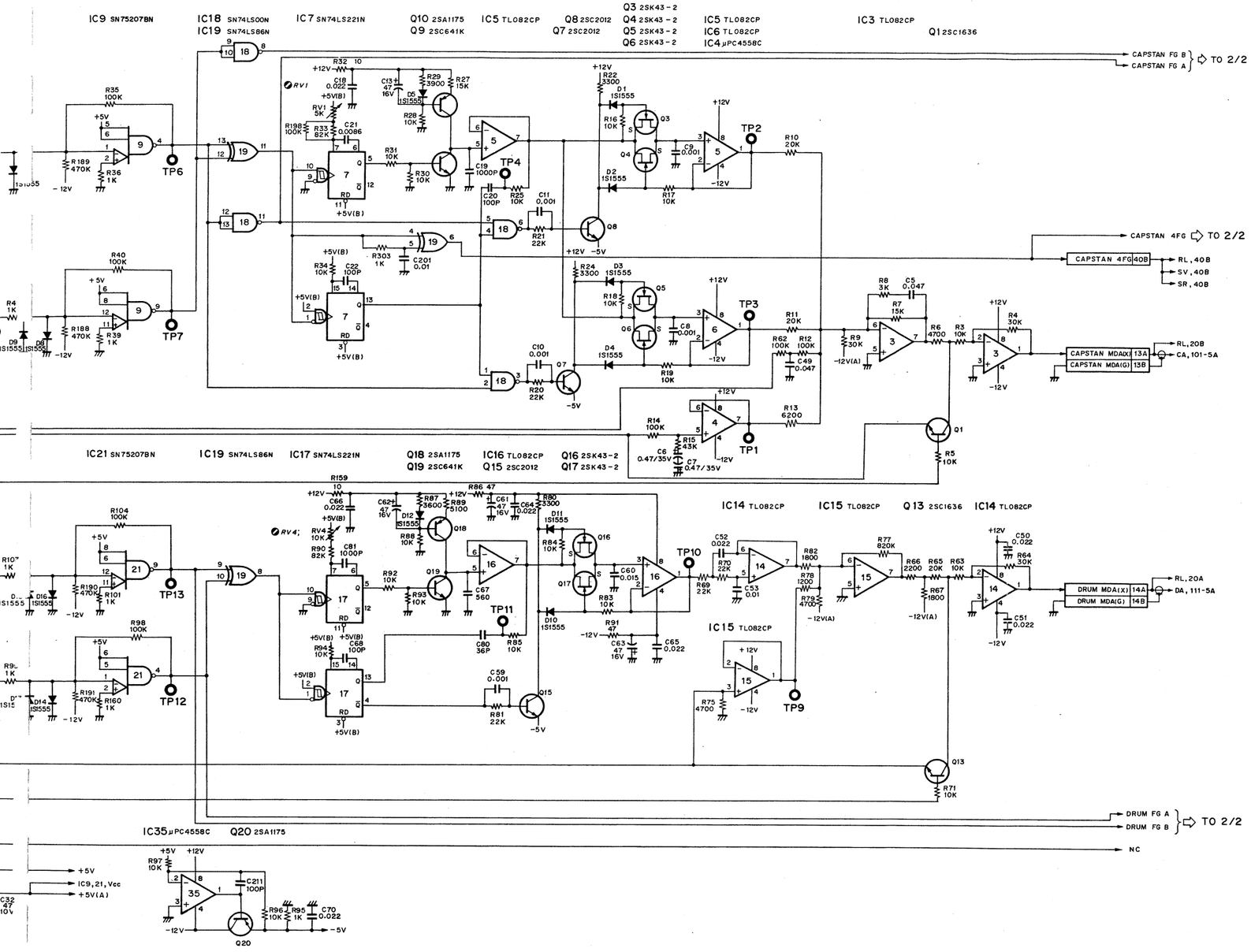

CD-17 (1/2)

BOARD NO. 1-606-705-13 & UP
BVH-2000PS ; # 11901-

CD-17 BOARD (2/2)

Capstan/Drum Servo

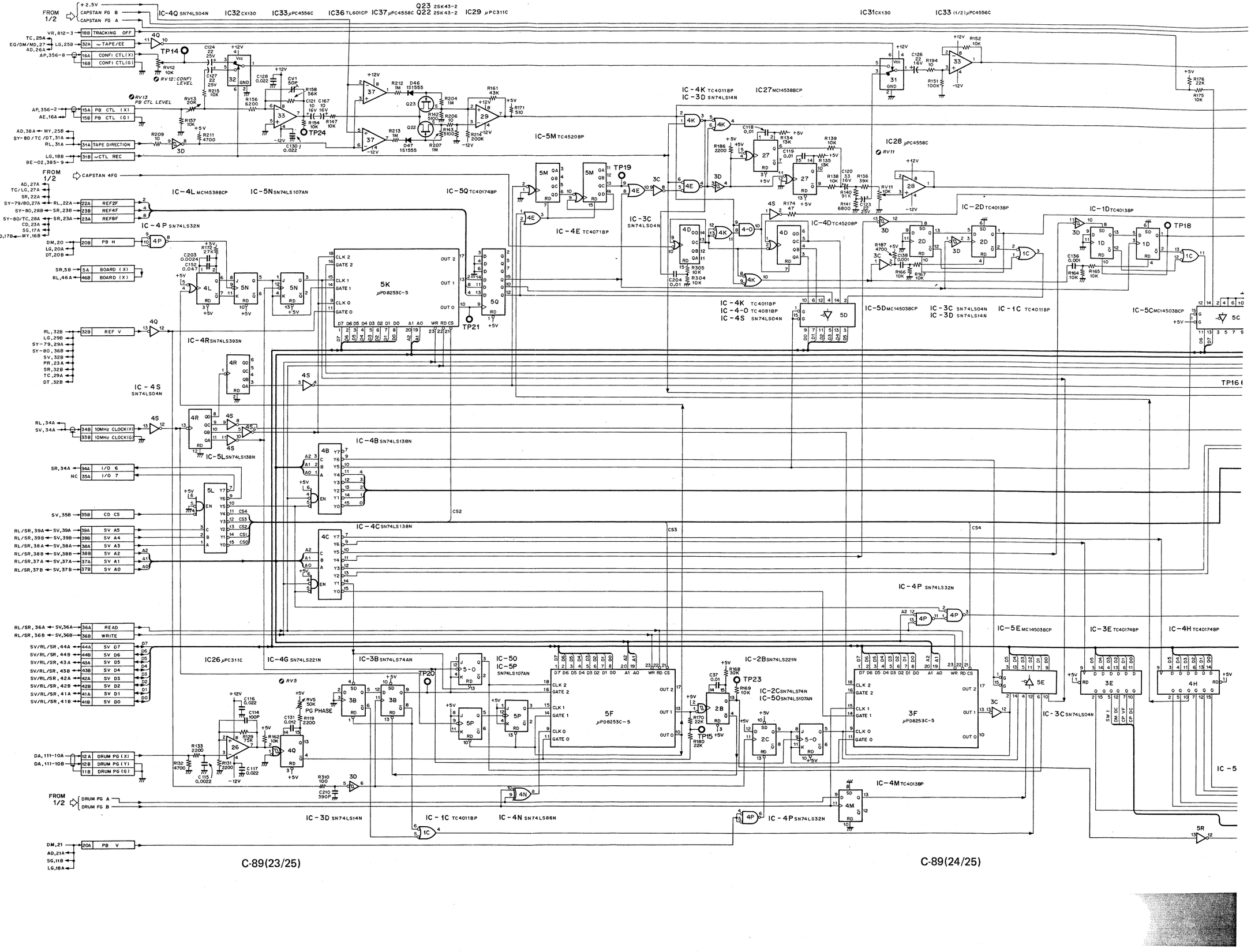

1-606-705-13 & UP CARD RACK CD-17 (2/2)

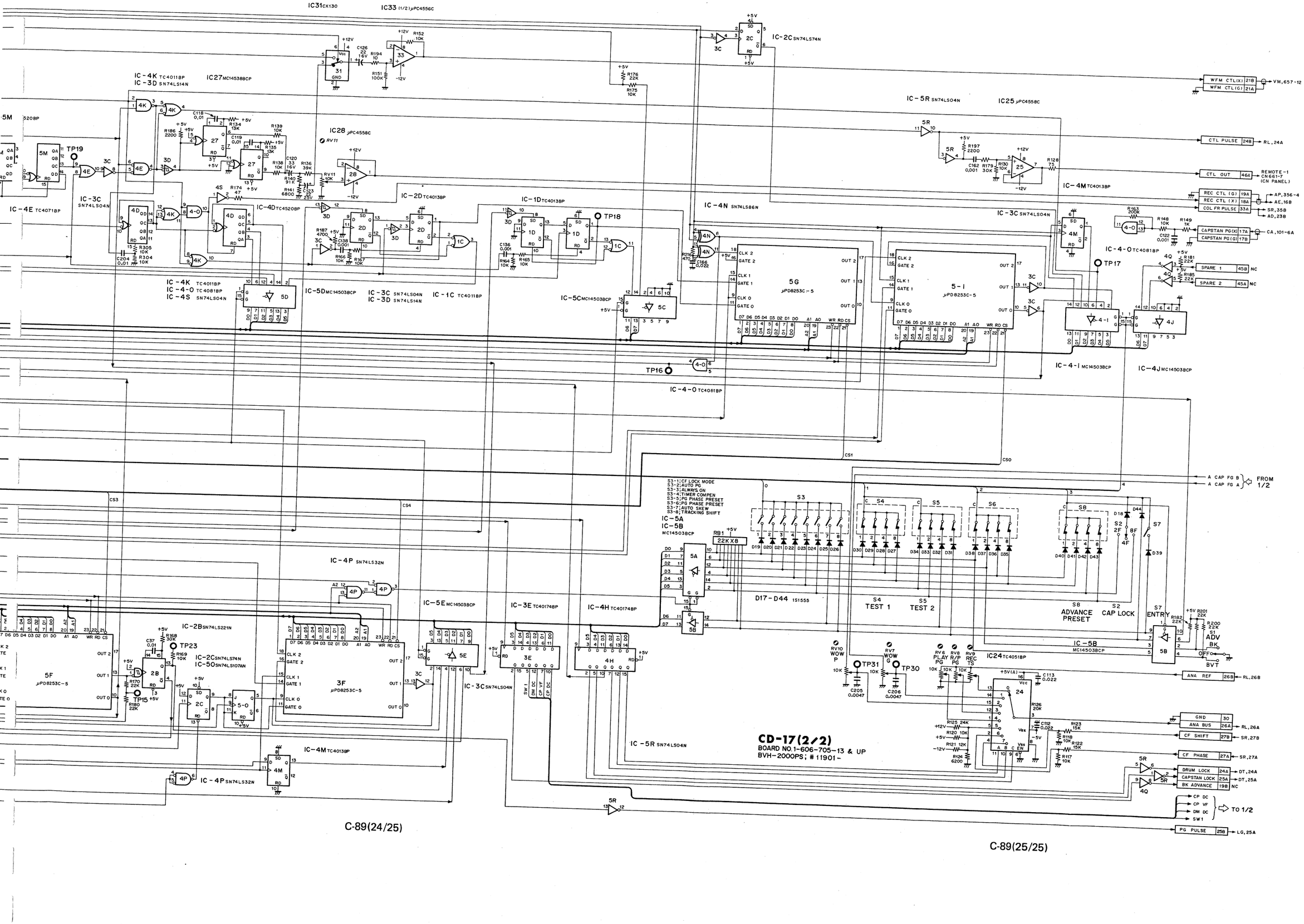

C-89(24/25)

C-89(25/25)

SR-15 BOARD (1-606-706-11)

Component Side

BVH-2000PS

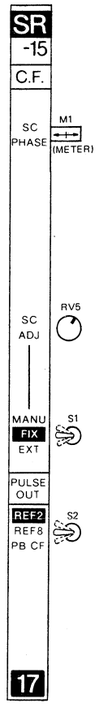

BVH-2000 (J, U/C)

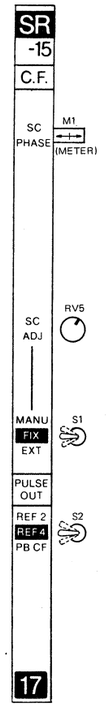

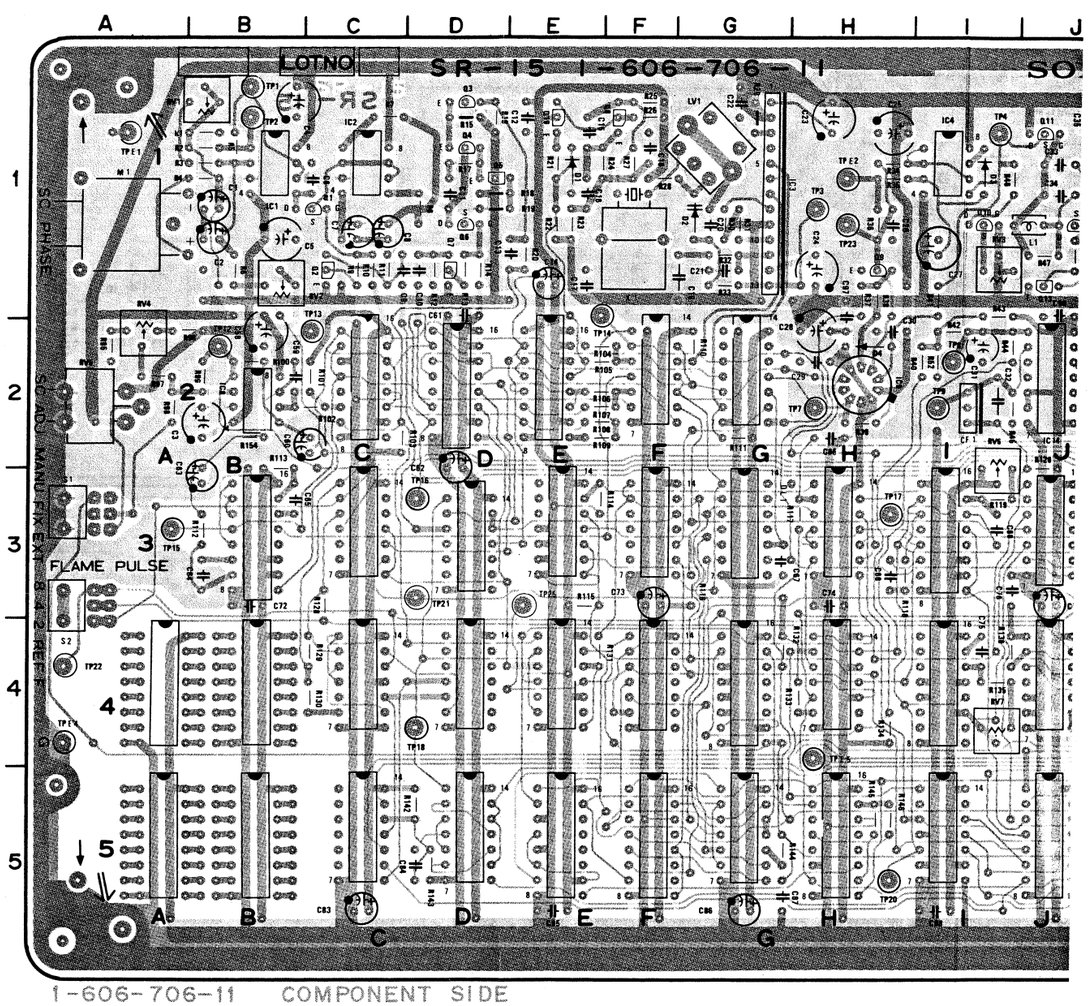

1-606-706-11 COMPONENT SIDE

BVH-2000
(J, U/C)

SR
-15
C.F.

SC PHASE M1 (METER)

SC ADJ RV5

MANU FIX EXT S1

PULSE OUT

REF 2 REF 4 PB CF S2

17

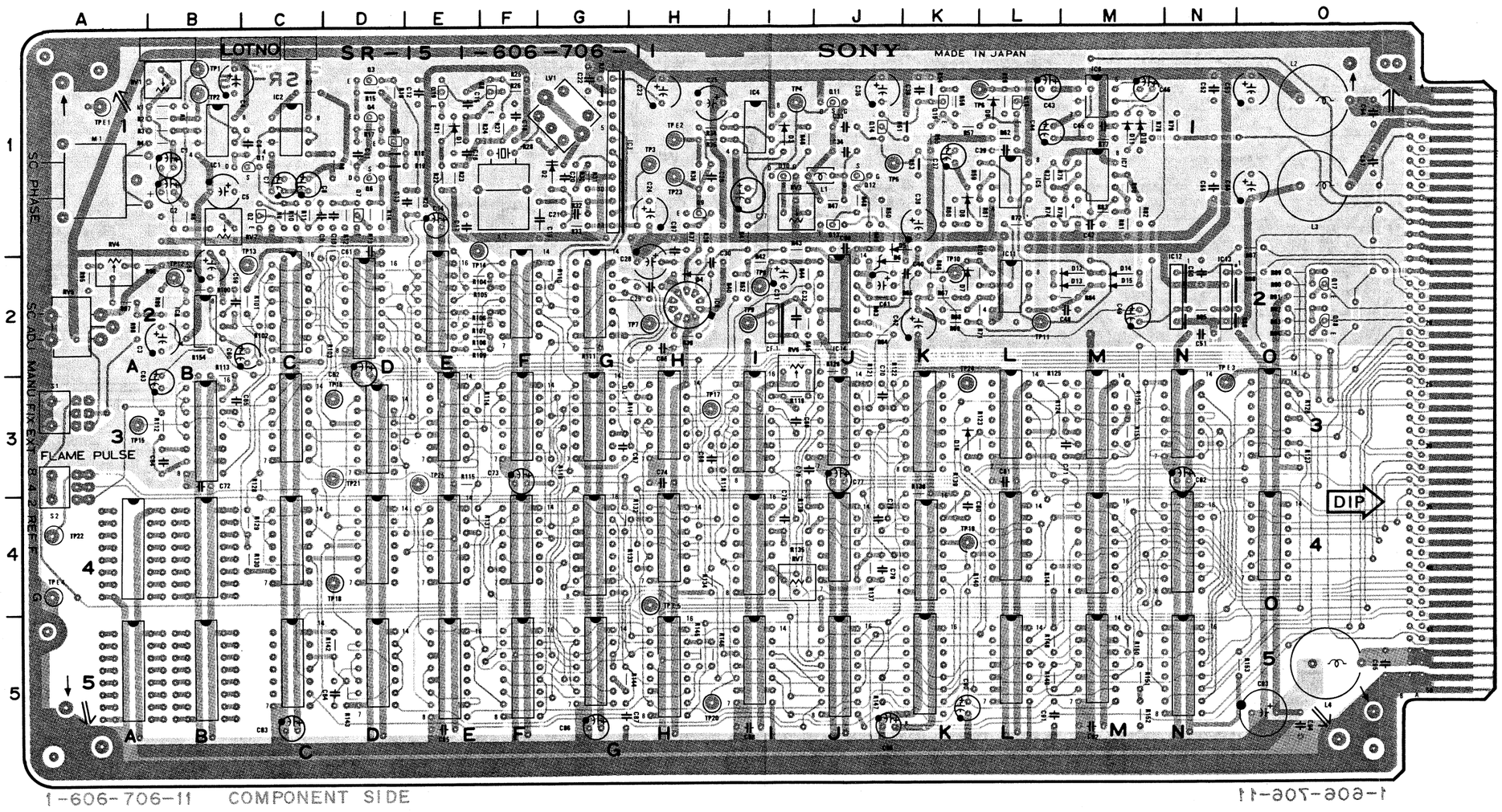

SR-15 (1-606-706-11)

BVH-2000(J,U/C)		IC6	1M		
BVH-2000PS		IC7	1M		
		IC8	2B		
D1	1E	IC9	2H		
D2	1G	IC11	2L		
D3	1I	IC12	2N		
D4	2H	IC13	2N		
D6	2J	IC14	2J		
D7	2K				
D8	1K	LV1	1G		
D9	1L				
D10	1M	M1	1A		
D11	1M				
D12	2M	Q1	1C		
D13	2M	Q2	1C		
D14	2M	Q3	1D		
D15	2M	Q4	1D		
D16	3K	Q5	1D		
		Q6	1D		
DL	3G	Q7	1D		
		Q8	1E		
IC1	1B	Q9	1H		
IC2	1C	Q10	1I		
IC2C		Q11	1J		
IC2D		Q12	1J		
IC2E		Q13	1J		
IC2F		Q14	1J		
IC2G		Q15	1K		
IC3	1G	Q16	1L		
IC3B		Q17	2O		
IC3C		Q18	2O		
IC3D		Q19	1E		
(PS)		RV1	1B		
IC3E		RV2	1B		
		RV3	1I		
IC3F		RV4	2A		
IC3H		RV5	2A		
IC3I		RV6	3I		
IC3J		RV7	4J		
IC3K					
IC3L		S1	3A		
IC3M		S2	3A		
IC3N					
IC3O		TP1	1B		
IC4	1I	TP2	1B		
IC4B		TP3	1H		
IC4C		TP4	1I		
IC4D		TP5	1J		
IC4E		TP6	1L		
		TP7	2H		
(PS)					
IC4F		(PS)			
IC4G		TP8	2I		
		TP9	2I		
IC4H					
IC4I		TP10	2K		
IC4J		TP11	2L		
IC4K		TP12	2B		
IC4L		TP13	2C		
IC4M		TP14	1F		
IC4N		TP15	3A		
IC4O		TP16	3D		
IC5	1L	TP17	3H		
IC5C		TP18	4D		
IC5D		TP19	4K		
		TP20	5H		
(PS)		TP21	3D		
IC5E		TP22	4A		
IC5F		TP23	1H		
IC5G		TP24	3K		
IC5H		TP25	3E		
IC5I		TPE1	1A		
IC5J		TPE2	1H		
IC5K		TPE3	3N		
IC5L		TPE4	4A		
IC5M		TPE5	4H		
IC5N					
		X1	1F		

SR-15 BOARD

Servo Ref. Signal Generator

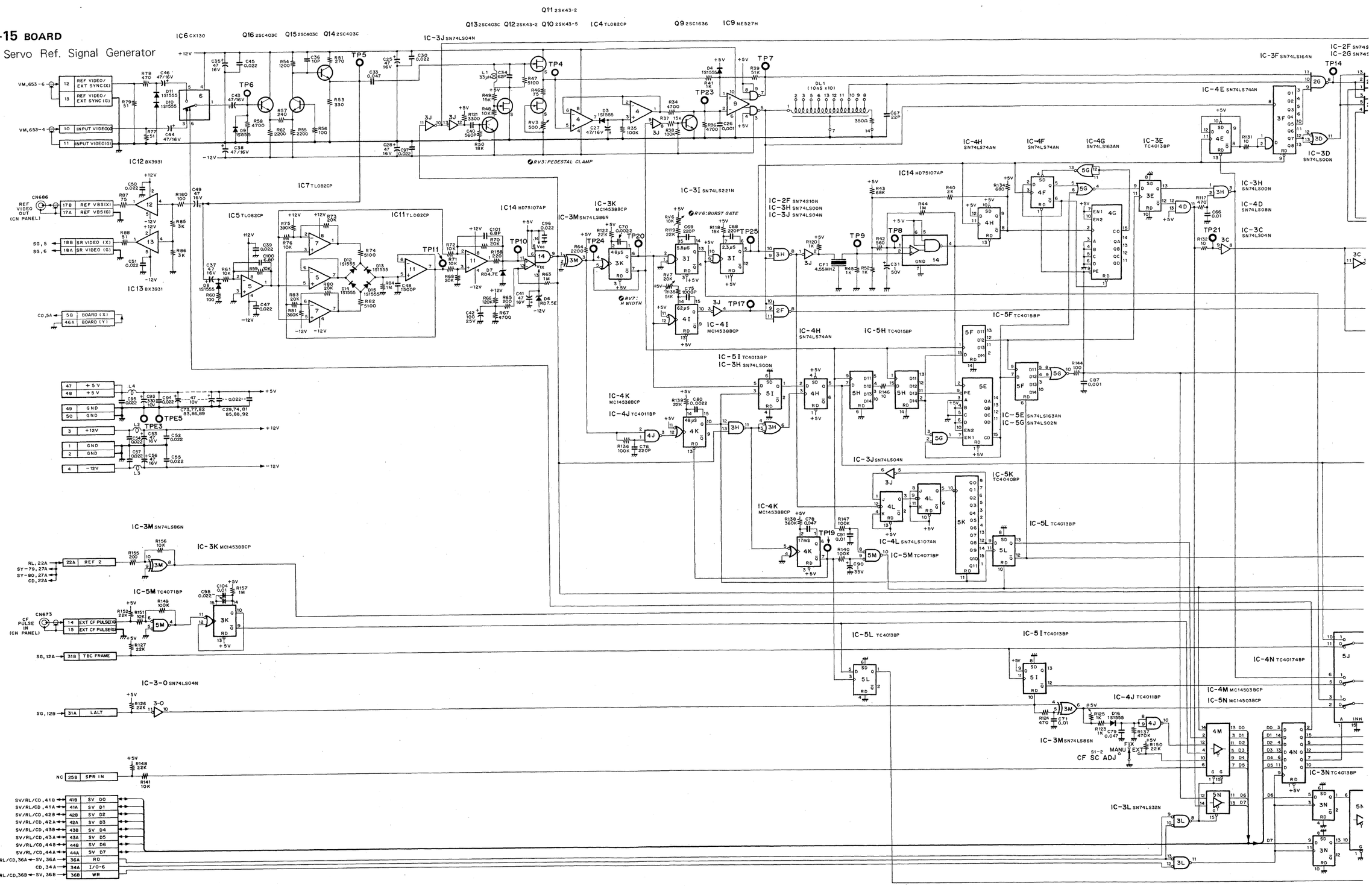

IC4 TL082CP Q9 2SC1636 IC9 NE527H IC3 BX381 Q8 2SC403C Q19 2SC403C

IC-3F SN74LS164N IC-2F SN74S10N IC-2G SN74S11N IC-4E SN74LS74AN IC-2E SN74LS112N IC-4H SN74LS74AN IC-4F SN74LS74AN IC-4G SN74LS163AN IC-3E TC4013BP IC-3D SN74LS00N IC14 HD75107AP IC-3H SN74LS00N IC-4D SN74LS08N IC-3C SN74LS04N IC-2D SN74LS112AN IC-2C SN74LS112AN IC-4E SN74LS74AN IC-3D SN74LS00N IC-2F SN74S10N IC-3B SN74123N IC8 TL082CP IC-3K MC14538BCP IC-3I SN74LS221N IC-2F SN74S10N IC-3H SN74LS00N IC-3J SN74LS04N IC-4I MC14538BCP IC-4H SN74LS74AN IC-5H TC4015BP IC-5F TC4015BP IC-5I TC4013BP IC-3H SN74LS00N IC-4K MC14538BCP IC-4J TC4011BP IC-5E SN74LS163AN IC-5G SN74LS02N IC-3J SN74LS04N IC-5K TC4040BP IC-4K MC14538BCP IC-4L SN74LS107AN IC-5M TC4071BP IC-5L TC4013BP IC-5L TC4013BP IC-5I TC4013BP IC-5J SN74LS157N IC-4N TC40174BP IC-4M MC14503BCP IC-5N MC14503BCP IC-4J TC4011BP IC-3M SN74LS86N IC-3L SN74LS32N IC-3N TC4013BP IC-5N MC14503BCP IC-5D TC4011BP IC-4C SN74LS107N IC-4J TC4011BP IC-3C SN74LS04N IC-4D SN74LS08N IC-5C SN74LS32N IC-4B SN74LS74AN IC-3-O SN74LS04N IC-4-O SN74LS04N IC-3-O SN74LS04N IC2 TL082CP IC1 TL082CP IC-4I MC14538BCP IC-3-O SN74LS04N Q17 2SC2603 Q18 2SC2603

Q3 2SC641K Q4 2SC641K Q5 2SA1175 Q6 2SK43-2 Q7 2SC403C Q1 2SK43-2 Q2 2SC403C

S1-1 CF SC ADJ S1-2 CF SC ADJ S2 PULSE OUT

RV6: BURST GATE RV7: H WIDTH RV2: CF DET OFFSET RV1: CF DET LEVEL RV4: SC PHASE LV1: PLL LOCK PHASE

REF SYNC 16 → TC,16A, SG,7A CF SHIFT 27B → CD,27B CF PHASE 27A → CD,27A PAL/SECAM 32A → DM,31, MD,31 FR PULSE -1(X) 19B, FR PULSE -1(G) 19A → TO TBC CN640-16 (CN PANEL) SIG F 22B → RL,22B COL FR PULSE 35B → CD,33A, AD,23B REF BW 33A → SG,11A NO REF 34B → NC SEL FRAME 24B → RL,24B REF H 21A → LG,29A FR PULSE-2(X) 20B, FR PULSE-2(G) 20A → CN683 FRAME PULSE OUT (CN PANEL) REF 8F 23A → SG,17A, TC,28A, CD,23A REF 4F 23B → SY-80,28B, CD,23B OVERRANGE 33B → NC SPR OUT-1 24A → NC SPR OUT-2 25A → NC

M1 CF SC PHASE

SR-15 BOARD
BOARD NO. 1-606-706-11
BVH-2000PS; #10001-10299

SR-15 BOARD (1-606-706-13)

Component Side

BVH-2000PS **BVH-2000(J,U/C)**
BVH-2000PM **BVH-2500(J,U/C)**

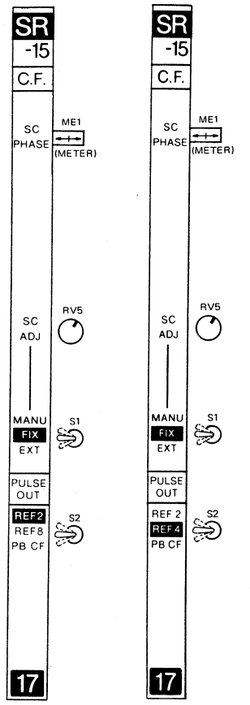

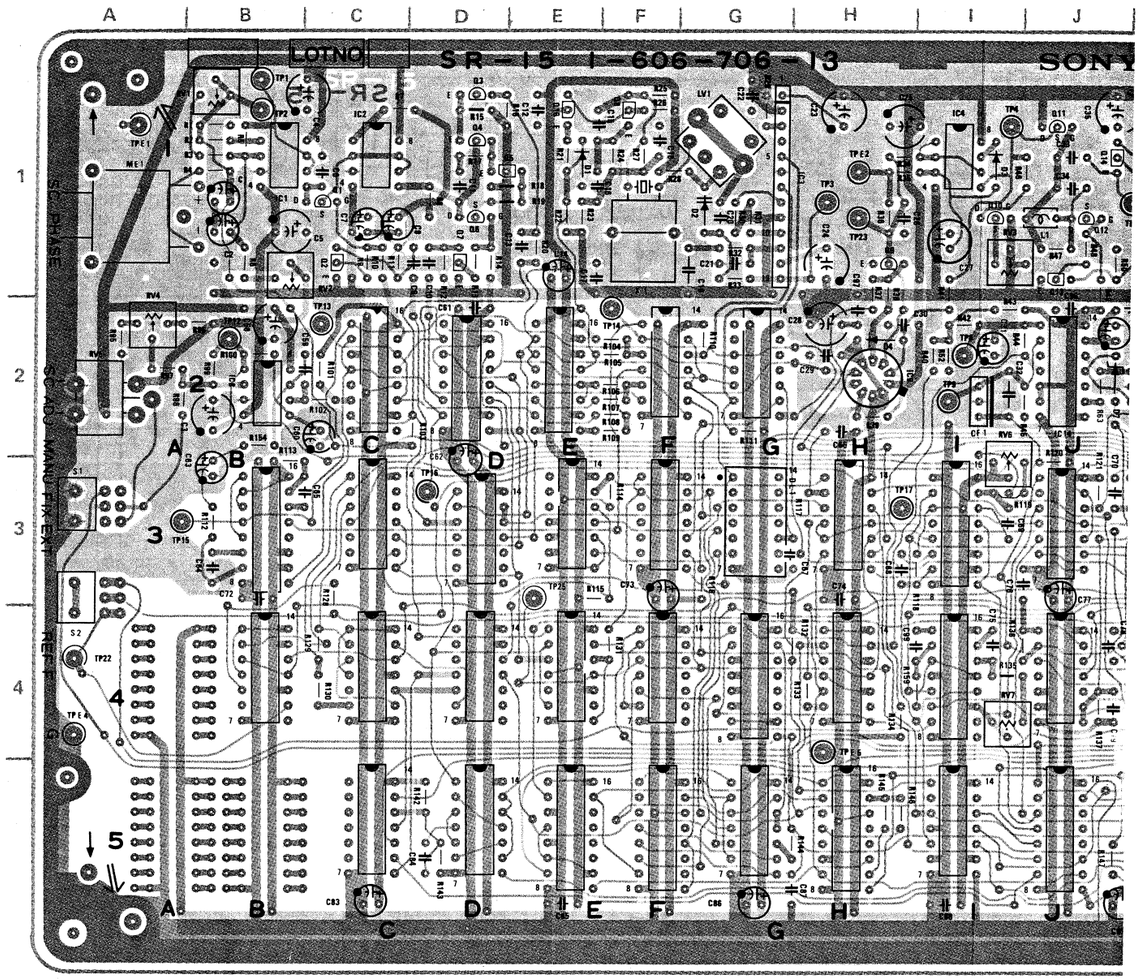

■ 1-606-706-13 COMPONENT SIDE

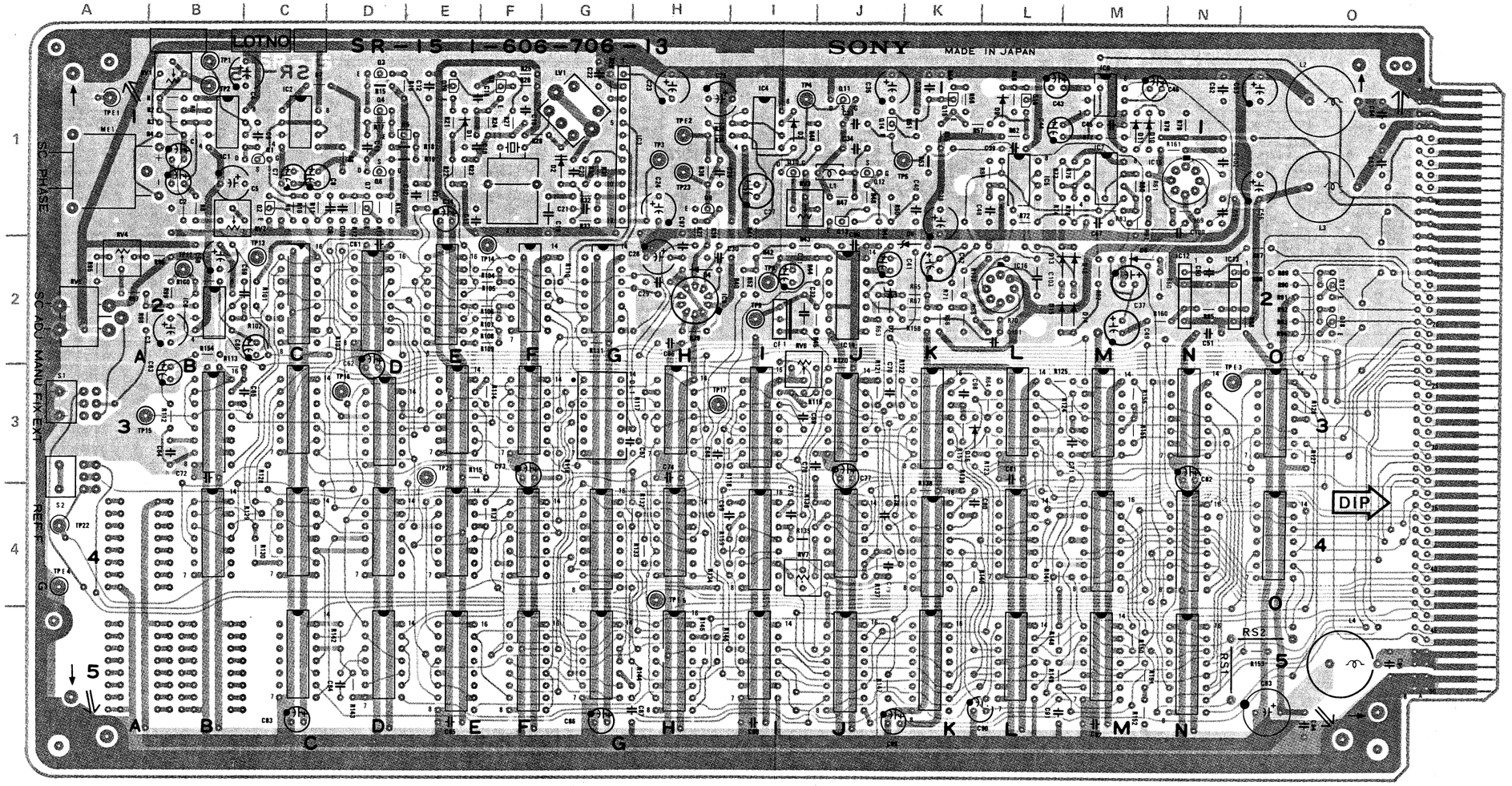

■ 1-606-706-13 COMPONENT SIDE

■ 1-606-706-13 SOLDER SIDE

C-95(3/7)

C-95(4/7)

SR-15 (1-606-706-13 & UP)

BVH-2000(J,U/C)		IC6	1M
BVH-2000PS		IC7	1M
BVH-2000PM		IC8	2B
BVH-2500(J,U/C)		IC9	2H
		IC12	2N
D1	1E	IC13	2N
D2	1G	IC14	2J
D3	1I	IC15	1N
D4	2H	IC16	2L
D6	2J		
D7	2J	LV1	1G
D8	2M		
D9	1L	ME1	1A
D10	1M		
D11	1M	Q1	1C
D12	2M	Q2	1C
D13	2L	Q3	1D
D14	2M	Q4	1D
D15	2L	Q5	1D
D16	3K	Q6	1D
		Q7	1D
DL1	3G	Q8	1F
		Q9	1H
IC1	1B	Q10	1I
IC2	1C	Q11	1J
IC2C		Q12	1J
IC2D		Q13	1J
IC2E		Q14	1J
IC2F		Q15	1K
IC2G		Q16	1L
IC3	1G	Q17	2O
IC3B		Q18	2O
IC3C		Q19	1E
IC3D			
		RV1	1B
(PS,PM)		RV2	1B
IC3E		RV3	1I
		RV4	2A
IC3F		RV5	2A
IC3H		RV6	3I
IC3I		RV7	4I
IC3J			
IC3K		S1	3A
IC3L		S2	3A
IC3M			
IC3N		TP1	1B
IC3O		TP2	1B
IC4	1I	TP3	1H
IC4B		TP4	1I
IC4C		TP5	1J
IC4D			
IC4E		(PS,PM)	
		TP8	2I
(PS,PM)		TP9	2I
IC4F			
IC4G		TP12	2B
		TP13	2C
IC4H		TP14	1F
IC4I		TP15	3A
IC4J		TP16	3D
IC4K		TP17	3H
IC4L		TP22	4A
IC4M		TP23	1H
IC4N		TP25	3E
IC4O			
IC5	1L	TPE1	1A
IC5C		TPE2	1H
IC5D		TPE3	3N
		TPE4	4A
(PS,PM)		TPE5	4H
IC5E			
IC5F		X1	1F
IC5G			
IC5H			
IC5I			
IC5J			
IC5K			
IC5L			
IC5M			
IC5N			

SR-15 BOARD

Servo Ref. Signal Generator

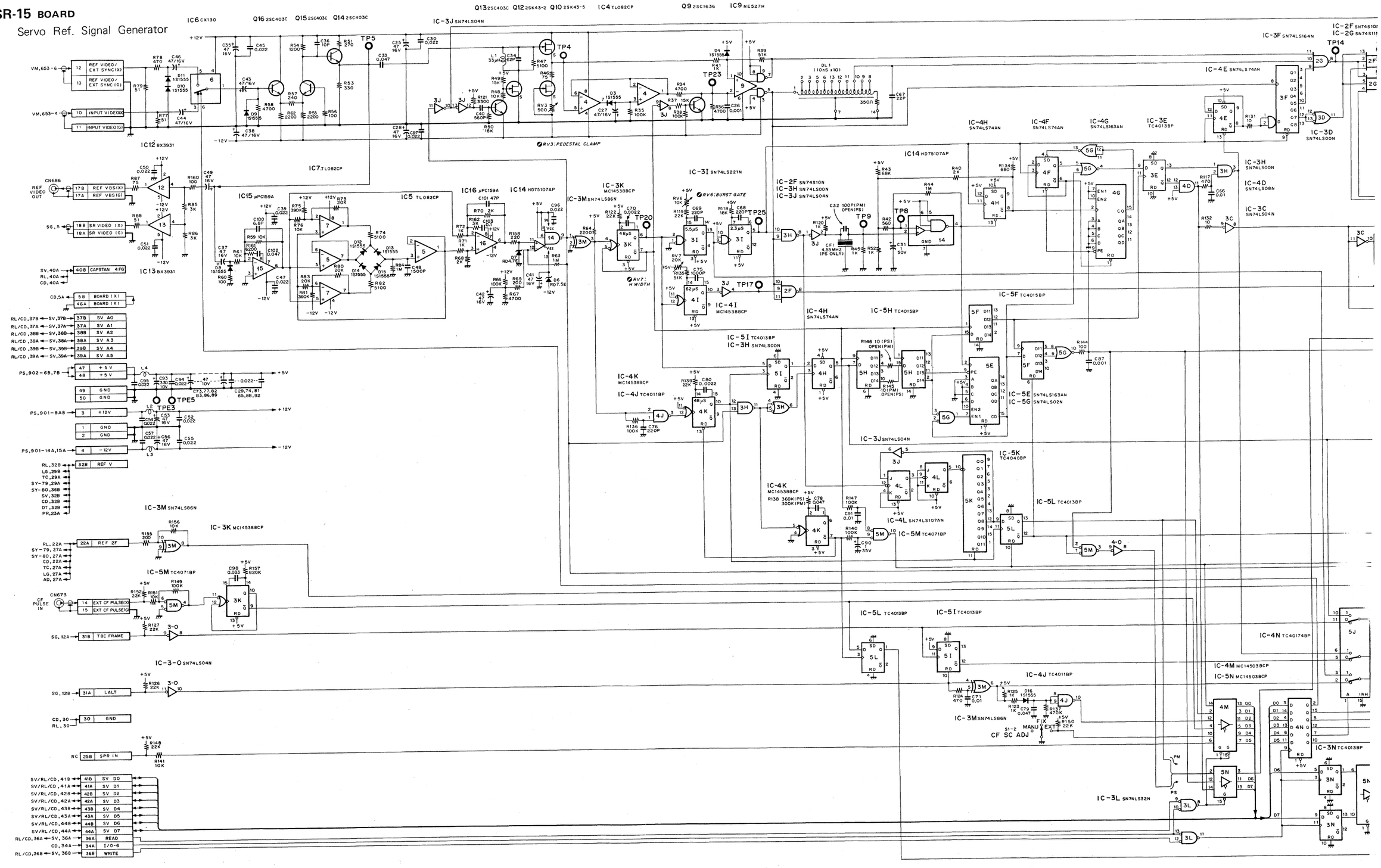

C-95(5/7)

C-95(6/7)

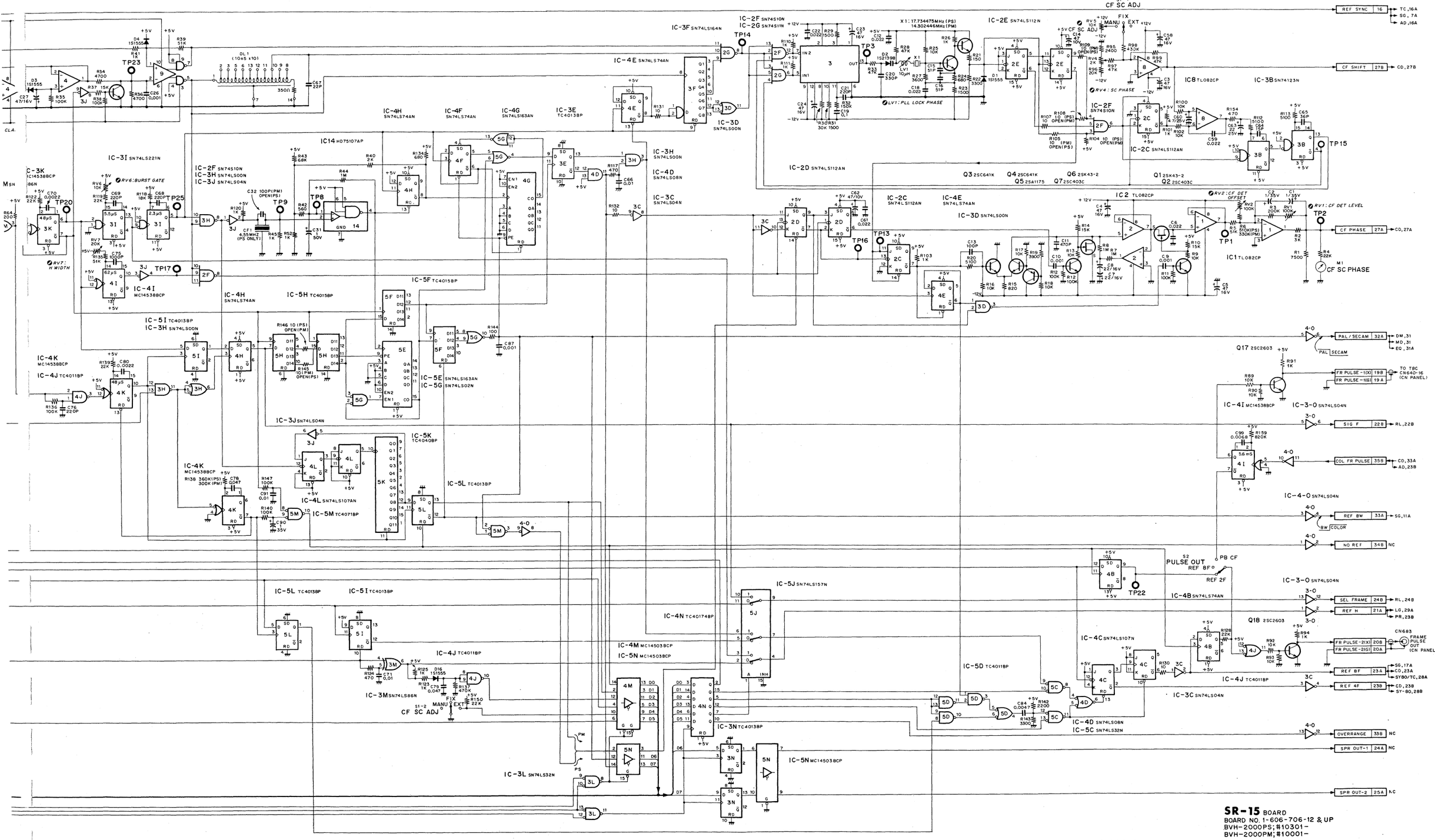

C-95(6/7)

C-95(7/7)

SR-15 BOARD
BOARD NO. 1-606-706-12 & UP
BVH-2000PS; #10301-
BVH-2000PM; #10001-

DT-05 BOARD (1-606-718-11)

Component Side

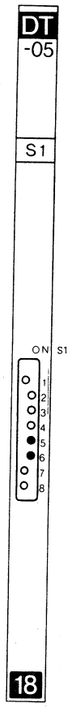

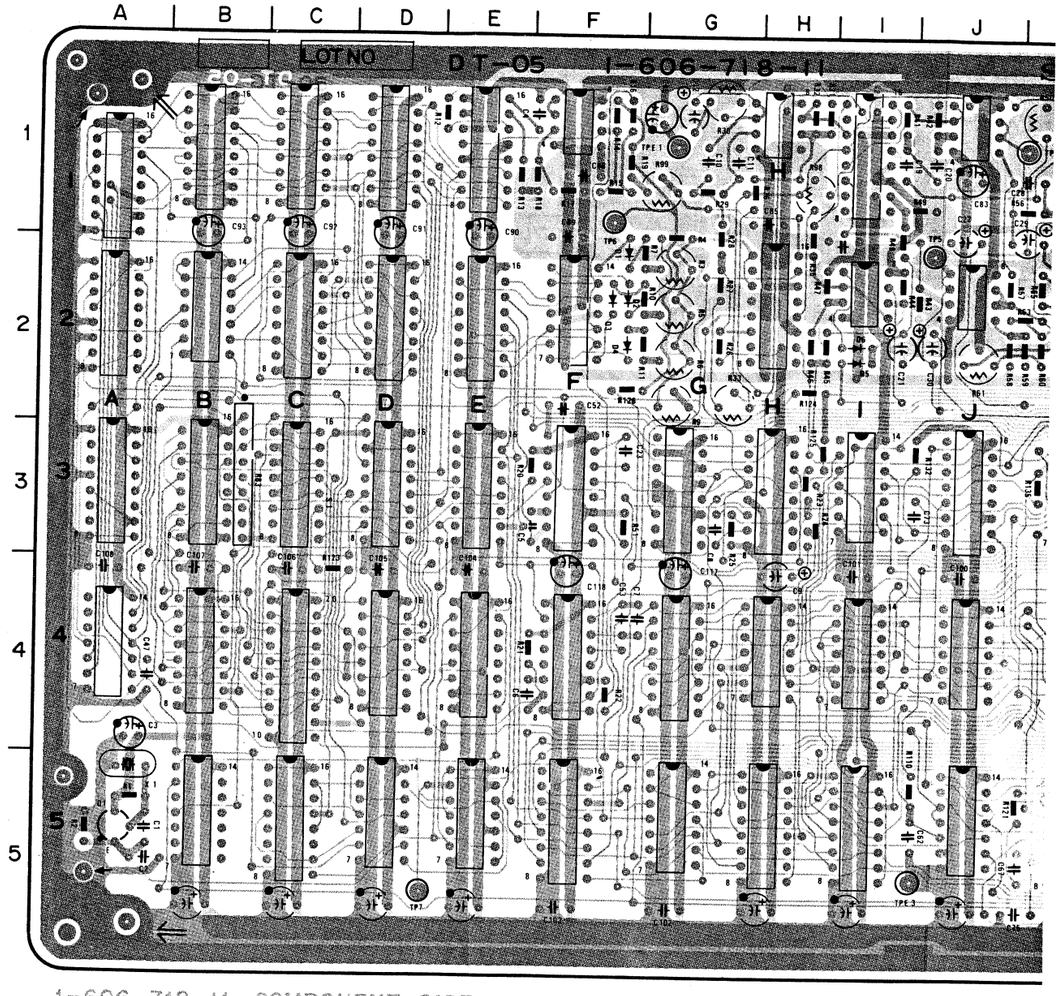

1-606-718-11 COMPONENT SIDE

RB1, 2, 3

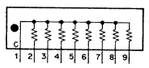

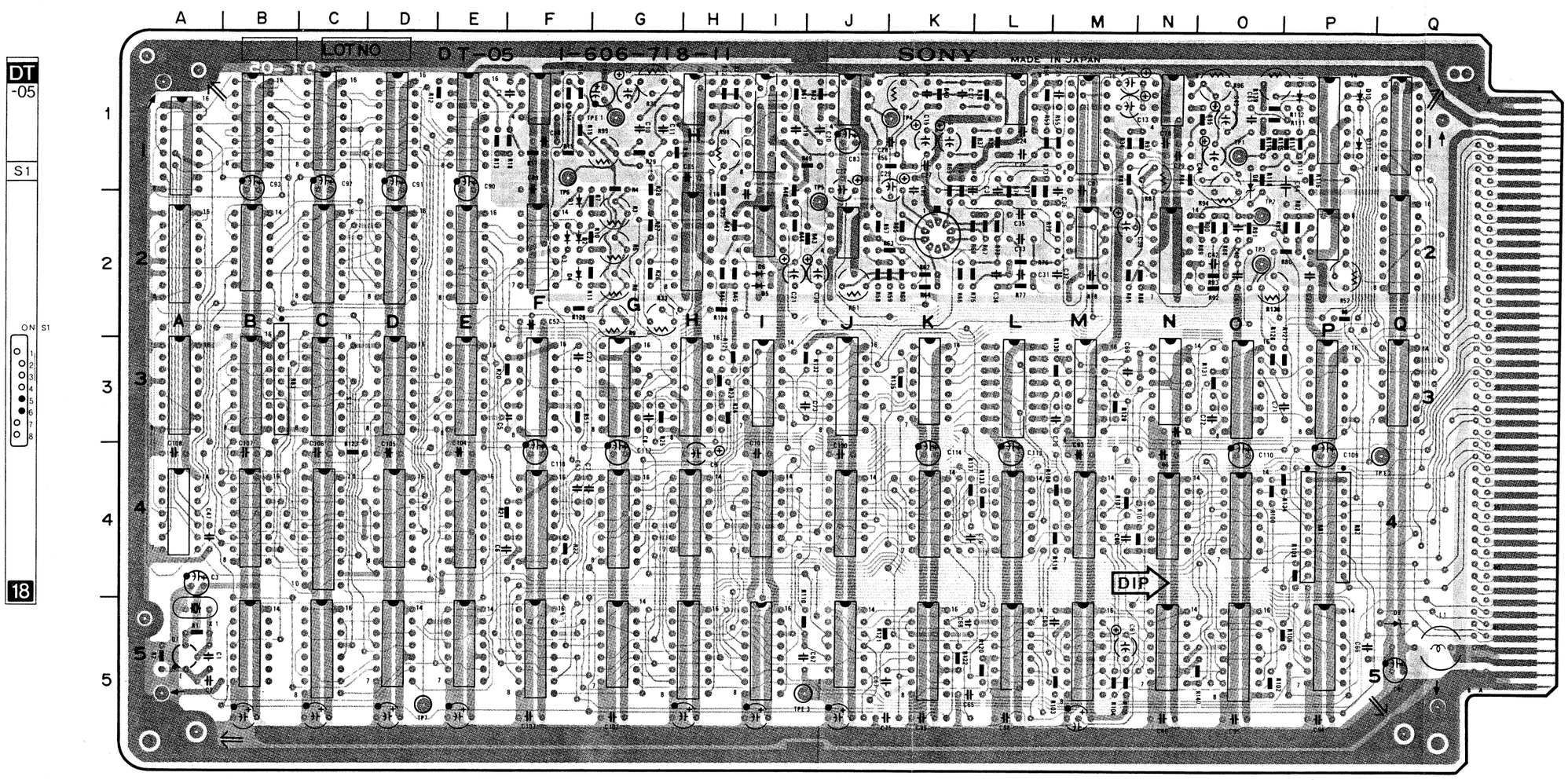

DT-05 (1-606-718-11)

BVH-2000PS (02/04 MODEL)

D1	2F	
D2	2F	
D3	2F	
D4	2F	
D5	2I	
D6	2I	
D7	1P	
D8	1O	
D9	5Q	
D10	1P	
D11	1P	
IC1A		
IC1B		
IC1C		
IC1D		
IC1E		
IC1F		
IC1H		
IC1I		
IC1J		
IC1L		
IC1M		
IC1N		
IC1Q		
IC1P		
IC2A		
IC2B		
IC2C		
IC2D		
IC2E		
IC2F		
IC2H		
IC2I		
IC2J		
IC2K		
IC2M		
IC2N		
IC2P		
IC2Q		
IC3A		
IC3B		
IC3D		
IC3E		
IC3F		
IC3G		
IC3H		
IC3J		
IC3K		
IC3M		
IC3N		
IC3O		
IC3P		
IC3Q		
IC4A		
IC4B		
IC4C		
IC4D		
IC4E		
IC4F		
IC4G		
IC4H		
IC4I		
IC4J		
IC4K		
IC4L		
IC4M		
IC4N		
IC4O		
IC5B		
IC5C		
IC5D		
IC5E		
IC5F		
IC5G		
IC5H		
IC5I		
IC5J		
IC5K		
IC5L		
IC5M		
IC5N		
IC5O		
IC5P		
Q1		5A
R3		2G
R5		2G
R6		2G
R9		2G
R30		1G
R33		2G
R50		1K
R52		2P
R61		2J
R87		1N
R94		1O
R96		1O
R98		1H
R99		1G
R138		2O
R139		1O
RB1		4P
RB2		4P
RB3		3B
S1		3C
TP1		1O
TP2		2O
TP3		2O
TP4		1K
TP5		2J
TP6		1F
TP7		5D
TPE1		1G
TPE2		3Q
TPE3		5J
X1		5A

1-606-718-11 COMPONENT SIDE

RB1, 2, 3

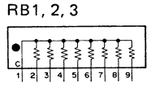

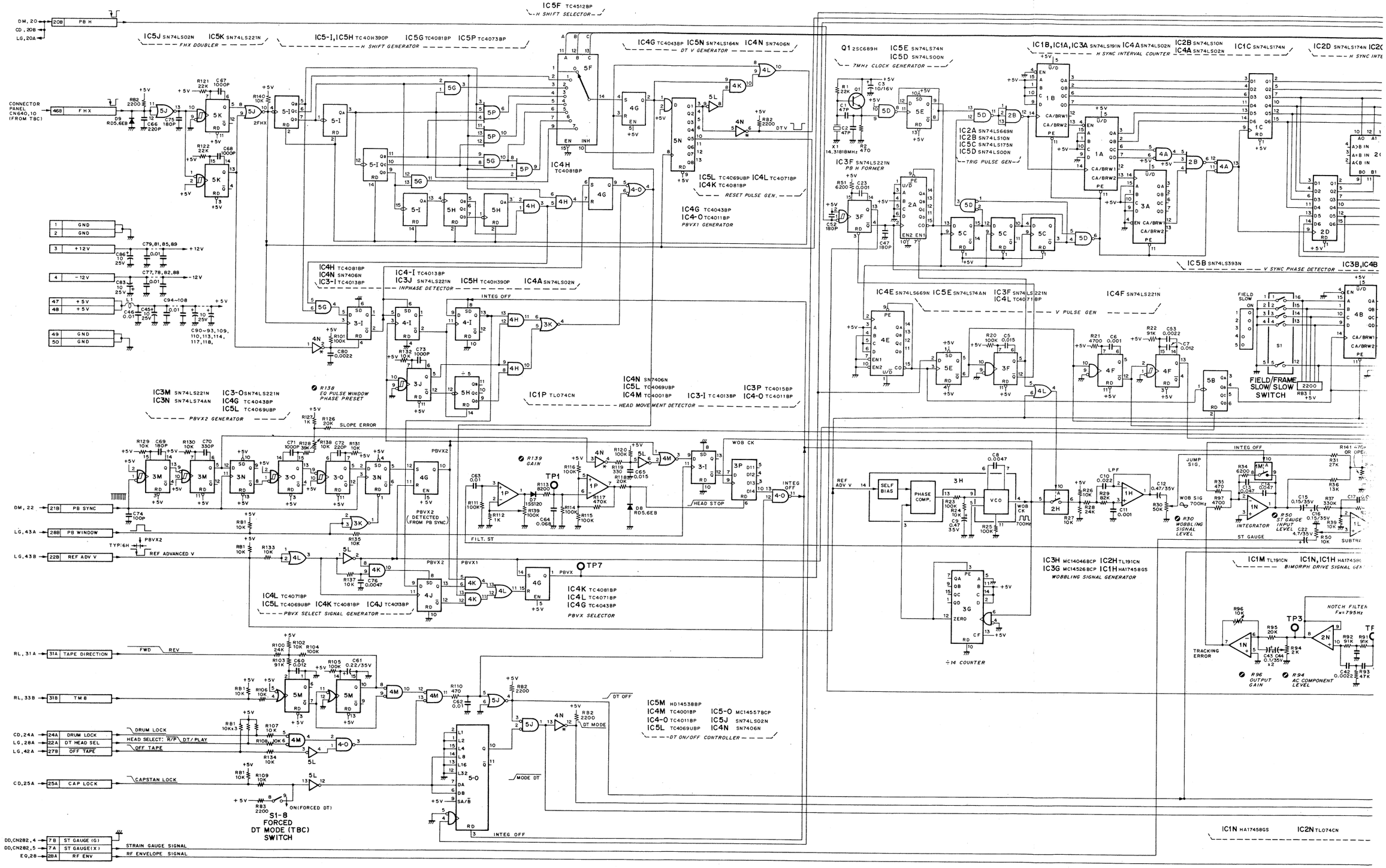
IC5F TC4512BP
H SHIFT SELECTOR
IC5J SN74LS02N IC5K SN74LS221N
FHX DOUBLER
IC5-1,IC5H TC40H390P IC5G TC4081BP IC5P TC4073BP
H SHIFT GENERATOR
IC4G TC4043BP IC5N SN74LS164N IC4N SN7406N
DT V GENERATOR
Q1 2SC689H IC5E SN74LS74N IC5D SN74LS00N
7MHz CLOCK GENERATOR
IC1B,IC1A,IC3A SN74LS191N IC4A SN74LS02N IC2B SN74LS10N IC4A SN74LS02N IC1C SN74LS174N IC2D SN74LS174N IC2C
H SYNC INTERVAL COUNTER
IC2A SN74LS669N IC2B SN74LS10N IC5C SN74LS175N IC5D SN74LS00N
TRIG PULSE GEN
IC3F SN74LS221N
PB H FORMER
IC5L TC4069UBP IC4L TC4071BP IC4K TC4081BP
RESET PULSE GEN.
IC4G TC4043BP IC4-0 TC4011BP
PBVX1 GENERATOR
IC5B SN74LS393N
V SYNC PHASE DETECTOR
IC3B,IC4B
IC4H TC4081BP IC4N SN7406N IC3-I TC4013BP
INPHASE DETECTOR
IC4-I TC4013BP IC3J SN74LS221N IC5H TC40H390P IC4A SN74LS02N
INTEG OFF
IC4E SN74LS669N IC5E SN74LS74N IC3F SN74LS221N IC4L TC4071BP
V PULSE GEN
IC4F SN74LS221N
IC3M SN74LS221N IC3N SN74LS74N IC3-0 SN74LS221N IC4G TC4043BP IC5L TC4069UBP
PBVX2 GENERATOR
IC4N SN7406N IC5L TC4069UBP IC4M TC4001BP IC3-I TC4013BP IC3P TC4015BP IC4-0 TC4011BP
HEAD MOVEMENT DETECTOR
IC1P TL074CN
IC4L TC4071BP IC5L TC4069UBP IC4K TC4081BP IC4J TC4013BP
PBVX SELECT SIGNAL GENERATOR
IC4K TC4081BP IC4L TC4071BP IC4G TC4043BP
PBVX SELECTOR
IC5M HD14538BP IC4M TC4001BP IC4-0 TC4011BP IC5-0 MC14557BCP IC5J SN74LS02N IC5L TC4069UBP IC4N SN7406N
DT ON/OFF CONTROLLER
IC3H MC14046BCP IC2H TL191CN IC3G MC14526BCP IC1H HA17458GS
WOBBLING SIGNAL GENERATOR
IC1M TL191CN IC1N,IC1H HA17458G
BIMORPH DRIVE SIGNAL GE
IC1N HA17458GS IC2N TL074CN
÷14 COUNTER
CONNECTOR PANEL CN640,10 (FROM TBC)
DM, 20
CD, 20B
LG, 20A
PB H
FHX
RD5.6EB
SLOPE ERROR
R138 EO PULSE WINDOW PHASE PRESET
R139 GAIN
R30 WOBBLING SIGNAL LEVEL
R50 ST GAUGE INPUT LEVEL
R96 OUTPUT GAIN
R94 AC COMPONENT LEVEL
FIELD/FRAME SLOW/SLOW SWITCH
S1-8 FORCED DT MODE (TBC) SWITCH
ON(FORCED DT)
TP1
TP3
TP7
PBVX2 DETECTED (FROM PB SYNC)
FILT. ST
HEAD STOP
WOB CK
INTEG OFF
DT OFF
DT MODE
MODE DT
JUMP SIG.
WOB SIG 700Hz
ST GAUGE
SUBTR
INTEGRATOR
TRACKING ERROR
NOTCH FILTER Fo=795Hz
LPF
SELF BIAS
PHASE COMP.
VCO
REF ADV V
DM, 22
LG, 43A
LG, 43B
RL, 31A
RL, 33B
CD, 24A
LG, 28A
LG, 42A
CD, 25A
DD, CN282, 4
DD, CN282, 5
EQ, 28
PB SYNC
PB WINDOW
REF ADV V
TAPE DIRECTION
TM 8
DRUM LOCK
DT HEAD SEL
OFF TAPE
CAP LOCK
ST GAUGE (G)
ST GAUGE (X)
RF ENV
STRAIN GAUGE SIGNAL
RF ENVELOPE SIGNAL
FWD
REV
HEAD SELECT: R/P
DT/PLAY
CAPSTAN LOCK

1-606-718-11 CARD RACK DT-05 (FOR 02/04)

IC4G TC4043BP IC5N SN74LS164N IC4N SN7406N
DT V GENERATOR

IC3K SN74LS02N IC2Q SN74LS175N IC3Q SN74LS02N IC4-0 TC4011BP IC5L TC4069UBP IC1Q SN74LS163N
COLOR INFORMATION SIGNAL GENERATOR

DT V 46A → CONNECTOR PANEL CN640,3 (TO TBC)

Q1 2SC689H IC5E SN74LS74N IC5D SN74LS00N
7MHz CLOCK GENERATOR

IC1B,IC1A,IC3A SN74LS191N IC4A SN74LS02N IC2B SN74LS10N IC1C SN74LS174N
H SYNC INTERVAL COUNTER

IC2D SN74LS174N IC2C SN74LS85N IC2B SN74LS10N IC4A SN74LS02N
H SYNC INTERVAL COMPARATOR

IC1D SN74LS74N
ΔF DATA LATCER

IC4D TC4008BP IC3E MC14175BCP IC3D TC4008BP
ADDER (ΔF+Δφ)

IC2A SN74LS669N
IC2B SN74LS10N
IC5C SN74LS175N
IC5D SN74LS00N
TRIG PULSE GEN.

IC3F SN74LS221N
PB H FORMER

IC4G TC4043BP
IC4-0 TC4011BP
PBVX1 GENERATOR

IC5L TC4069UBP IC4L TC4071BP
IC4K TC4081BP
RESET PULSE GEN.

IC5B SN74LS393N IC3B,IC4B SN74LS191N IC4C SN74LS374N
V SYNC PHASE DETECTOR

X0~X7: ΔF

IC4E SN74LS669N IC5E SN74LS74N IC3F SN74LS221N IC4L TC4071BP
V PULSE GEN

IC4F SN74LS221N

FIELD SLOW
FIELD/FRAME SLOW/SLOW SWITCH
R83 2200

FIELD/FRAME SLOW SWITCH
S1-6 R123 10K
S1: ON: FIELD (1-PITCH JUMP)
OFF: FRAME (2-PITCH JUMP)

IC2E TC4028BP DECODER
JUMP STATUS

IC1P,2F TL074CN
IC2H TL191CN
JUMP SIG GEN (D/A CONV)

R9 JUMP SIG. D/A LEVEL
R3 JUMP SIG. D/A LEVEL
R5 R6 JUMP SIG. D/A LEVEL

R99 ADDITION LEVEL

IC1E DAC18BC
IC1F HA17458GS
SLOPE ERROR GENERATOR

TP6 SLOPE ERROR

IC1F HA17458GS
REFERENCE VOLTAGE GENERATOR

JUMP SIGNAL

IC4N SN7406N
IC5L TC4069UBP
IC4M TC4001BP
IC3-I TC4013BP
IC3P TC4015BP
IC4-0 TC4011BP
AD MOVEMENT DETECTOR

WOB CK
HEAD STOP
INTEG OFF
D8 RD5.6EB

REF ADV V
SELF BIAS
PHASE COMP.
3H
VCO
WOB CK 700Hz
÷14 COUNTER

IC3H MC14046BCP IC2H TL191CN
IC3G MC14526BCP IC1H HA17458GS
WOBBLING SIGNAL GENERATOR

WOB SIG 700Hz
R30 WOBBLING SIGNAL LEVEL

LPF
JUMP SIG.
INTEG OFF
R98 DT DRE PRESET
R33 DRE LEVEL
DT OFF
DRE
ST GAUGE
R50 ST GAUGE INPUT LEVEL
INTEGRATOR
SUBTRACTOR

IC2-I TL072CP
OVER JUMP VOLT DETECTOR
HPF Fc≒500Hz

TP5 FILT.ST

IC1L,IC1J TL072CP IC2J HA17458GS
HEAD WOBBLING DETECTOR

R DRE 6A
DRE(X) 5A → DD,CN282,1
DRE(G) 5B → DD,CN282,2

IC1M TL191CN IC1N,IC1H HA17458GS IC1-I TL191CN
BIMORPH DRIVE SIGNAL GENERATOR

LPF Fc=1750Hz
NOTCH FILTER Fw=795Hz
HPF Fc≒500Hz

TRACKING ERROR
TP3 TP2 TP4
R96 OUTPUT GAIN
R94 AC COMPONENT LEVEL
R87 BALANCE ERROR CANCELLATION
R61 BALANCE

MULTIPLEXER
2K

RF ENVELOPE
R52 RF ENVELOPE INPUT LEVEL
BIAS GEN.

IC5M HD14538BP
IC4M TC4001BP
IC4-0 TC4011BP
IC5L TC4069UBP
IC5-0 MC14557BCP
IC5J SN74LS02N
IC4N SN7406N
DT ON/OFF CONTROLLER

DT OFF → DT OFF 32A → LG,44A
DT MODE → DT MODE 45A → CONNECTOR PANEL CN640,15 (TO TBC)
MODE DT → MODE DT 44A → LG,41B
DT EXIST 24B → LG,41A

IC1N HA17458GS IC2N TL074CN IC2P HA17458GS IC1M TL191CN IC1L TL072CP IC2J HA17458GS IC2M HA17458GS IC1J TL072CP IC2K μA796HCA
TRACKING ERROR DETECTOR

DT-05 BOARD (FOR 02/04)
BOARD NO.1-606-718-11
BVH-2000PS ; #10001~10699

DT-05 BOARD (1-606-718-12)

Component Side

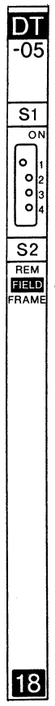

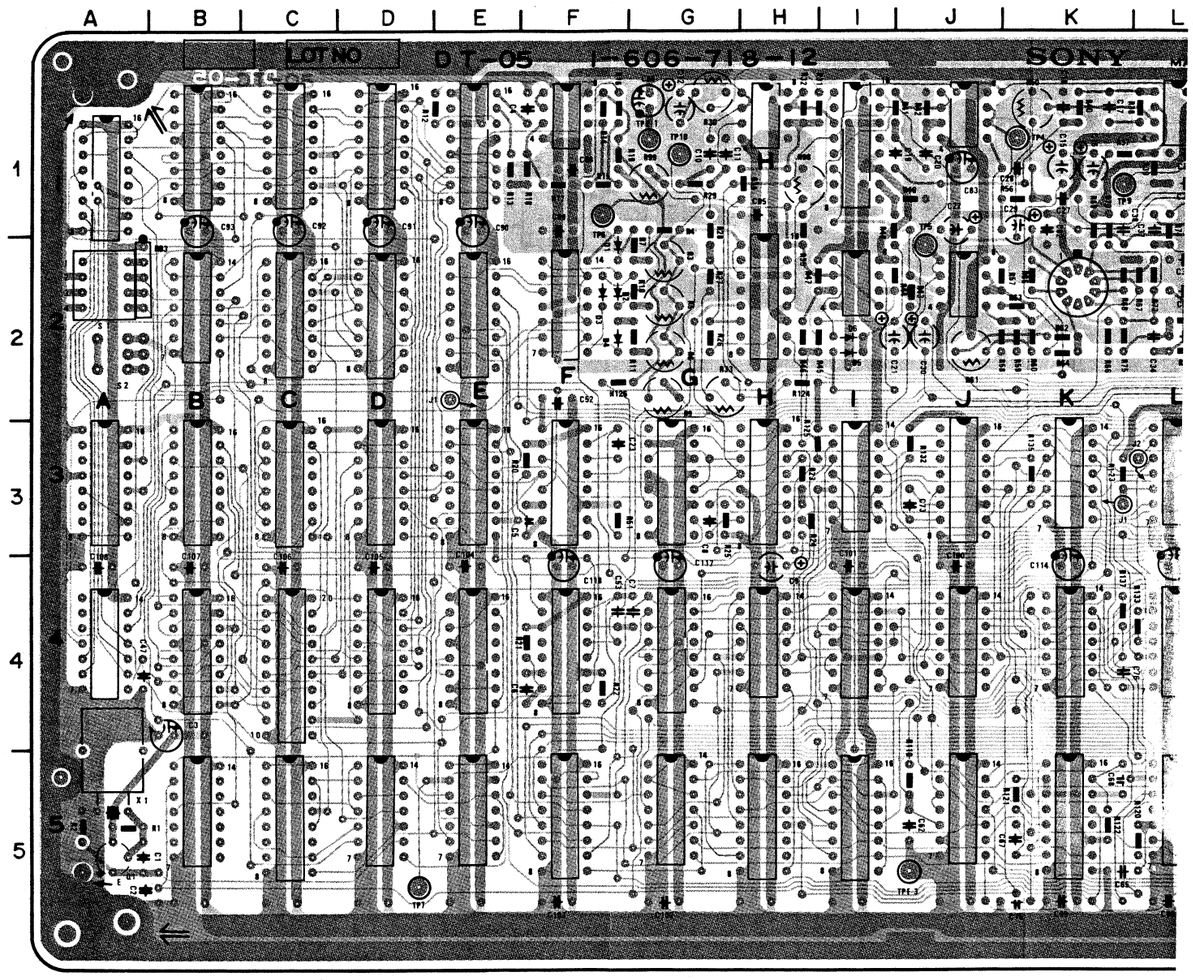

1-606-718-12 COMPONENT SIDE

RB1, 2

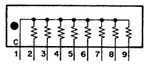

RB3

DT-05 (FOR 02/04) CARD RACK 1-606-718-12

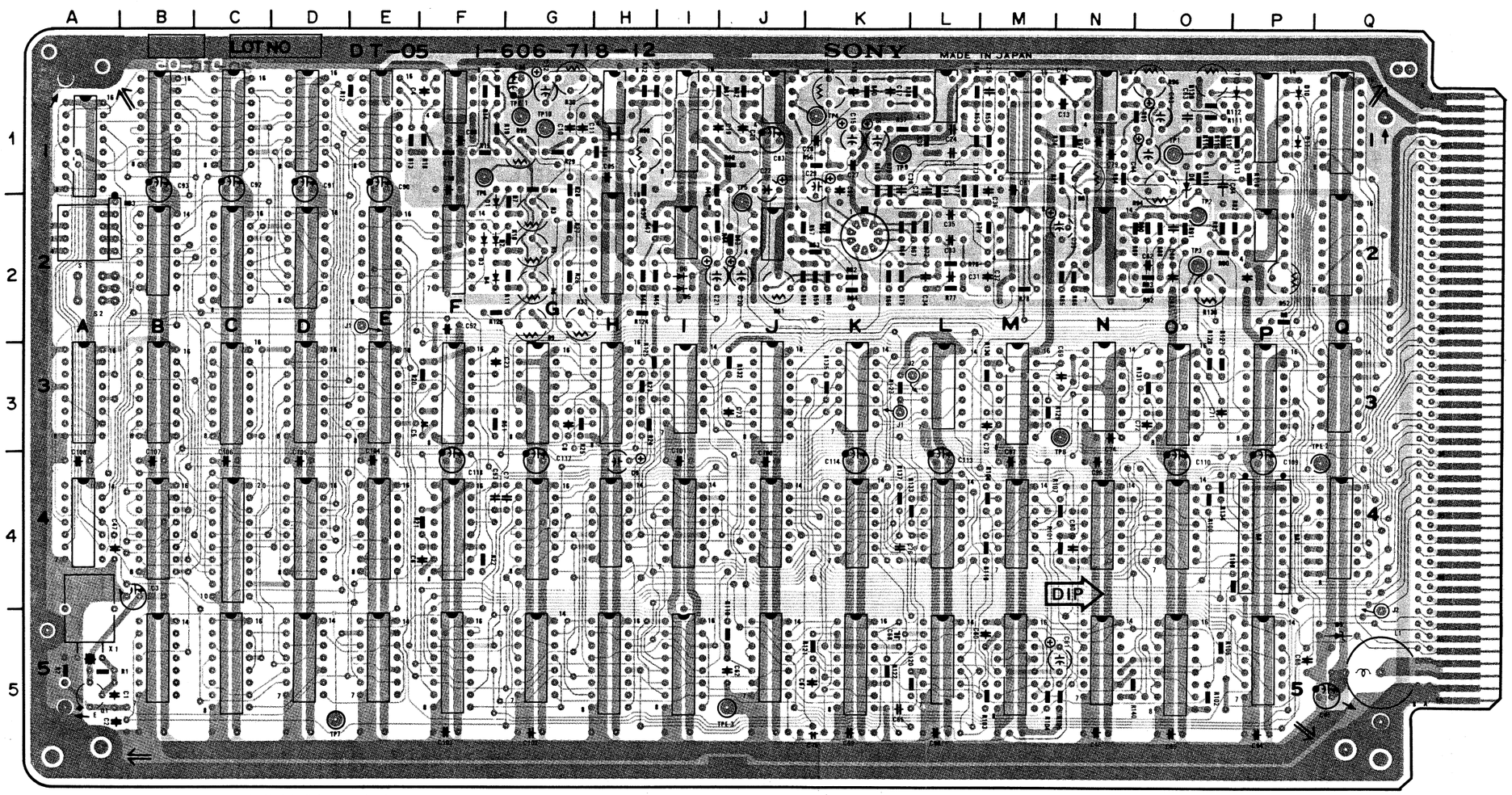

1-606-718-12 COMPONENT SIDE

1-606-718-12

DT-05 (1-606-718-12)

BVH-2000PS (02/04 MODEL)

D1	2F	IC4G	
D2	2F	IC4H	
D3	2F	IC4I	
D4	2F	IC4J	
D5	2I	IC4K	
D6	2I	IC4L	
D7	1P	IC4M	
D8	1O	IC4N	
D9	5Q	IC4O	
D10	1P	IC5B	
D11	1P	IC5C	
IC1A		IC5D	
IC1B		IC5E	
IC1C		IC5F	
IC1D		IC5G	
IC1E		IC5H	
IC1F		IC5I	
IC1H		IC5J	
IC1I		IC5K	
IC1J		IC5L	
IC1L		IC5M	
IC1M		IC5N	
IC1N		IC5O	
IC1Q		IC5P	
IC1P		Q1	5A
IC2A		R3	2G
IC2B		R5	2G
IC2C		R6	2G
IC2D		R9	2G
IC2E		R30	1G
IC2F		R33	2G
IC2H		R50	1K
IC2I		R52	2P
IC2J		R61	2J
IC2K		R87	1N
IC2M		R94	1O
IC2N		R96	1O
IC2P		R98	1H
IC2Q		R99	1G
IC3A		R138	2O
IC3B		R139	1O
IC3D		RB1	4P
IC3E		RB2	4P
IC3F		RB3	3B
IC3G		S1	3C
IC3H		S2	2A
IC3I		TP1	1O
IC3J		TP2	2O
IC3K		TP3	2O
IC3L		TP4	1K
IC3M		TP5	2J
IC3N		TP6	1F
IC3O		TP7	5D
IC3P		TP8	3N
IC3Q		TP9	1K
IC4A		TP10	1G
IC4B			
IC4C			
IC4D		TPE1	1G
IC4E		TPE2	3Q
IC4F		TPE3	5J
		X1	5A

RB1, 2

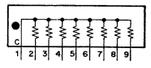

RB3

DT-05 BOARD; FOR 02/04 MODEL

DT Control

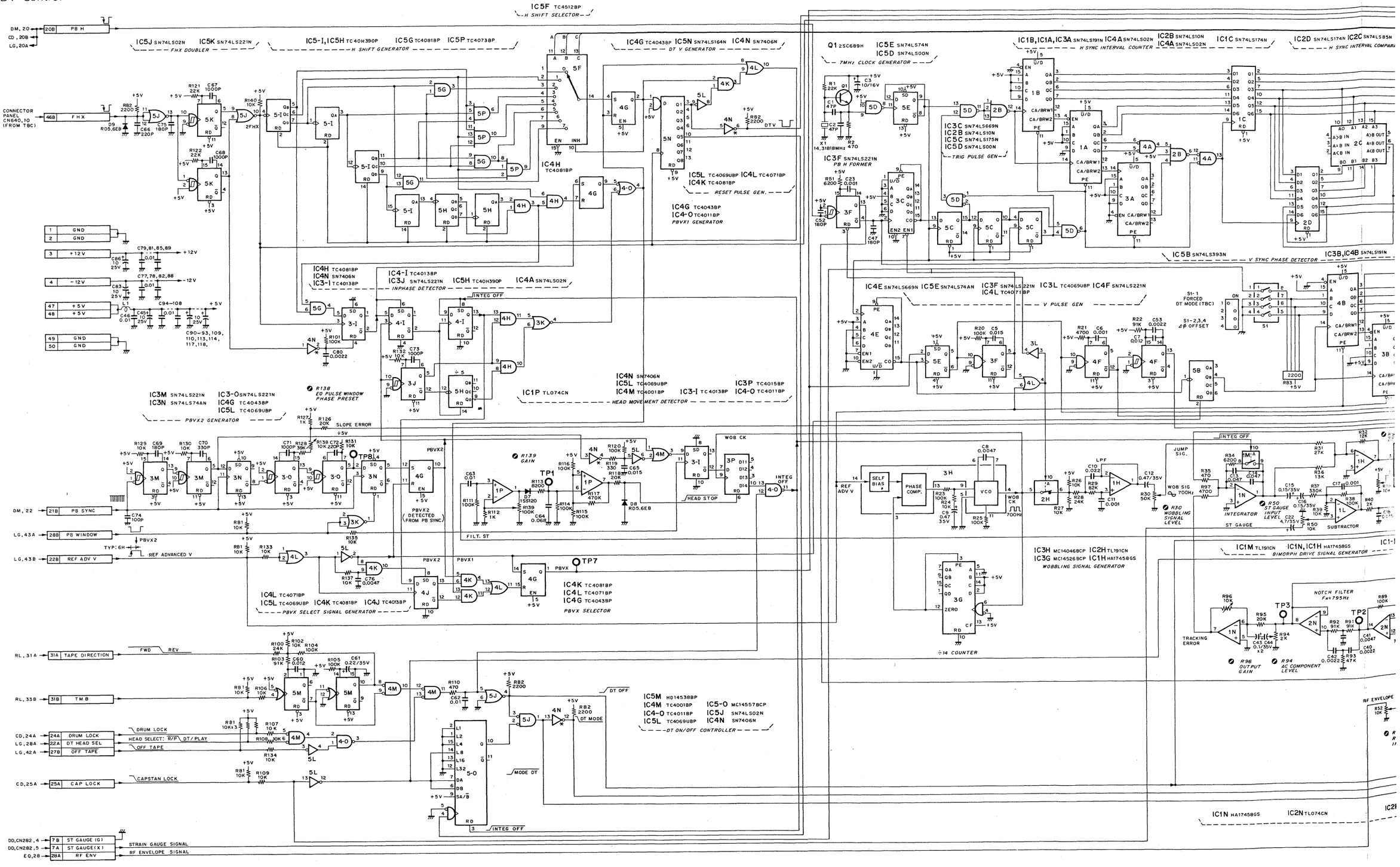

1-606-718-12 CARD RACK DT-05 (FOR 02/04)

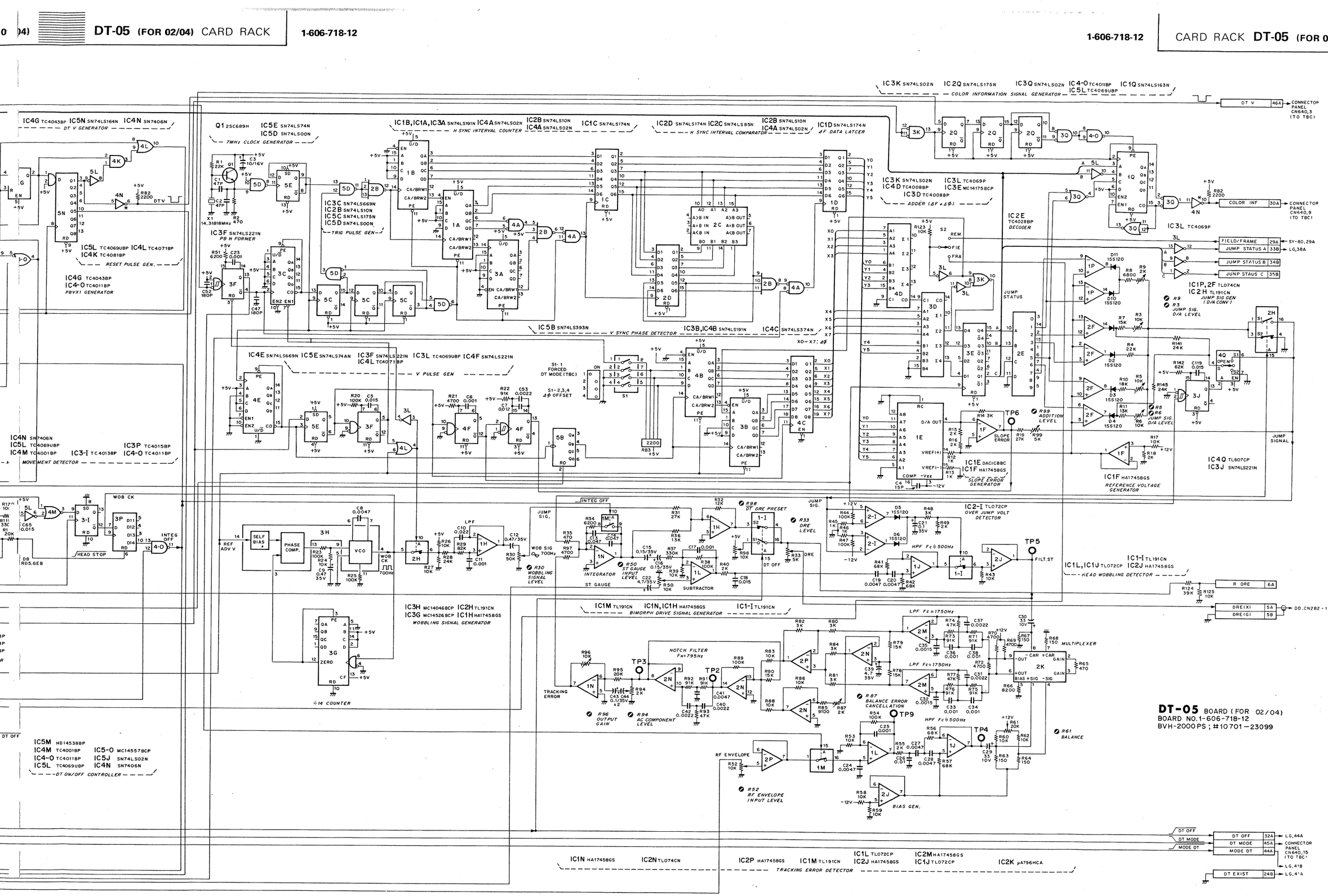

DT-05 BOARD (1-606-718-13)

Component Side

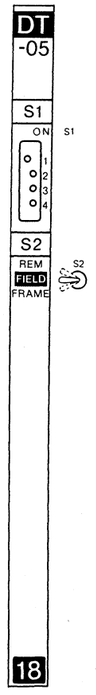

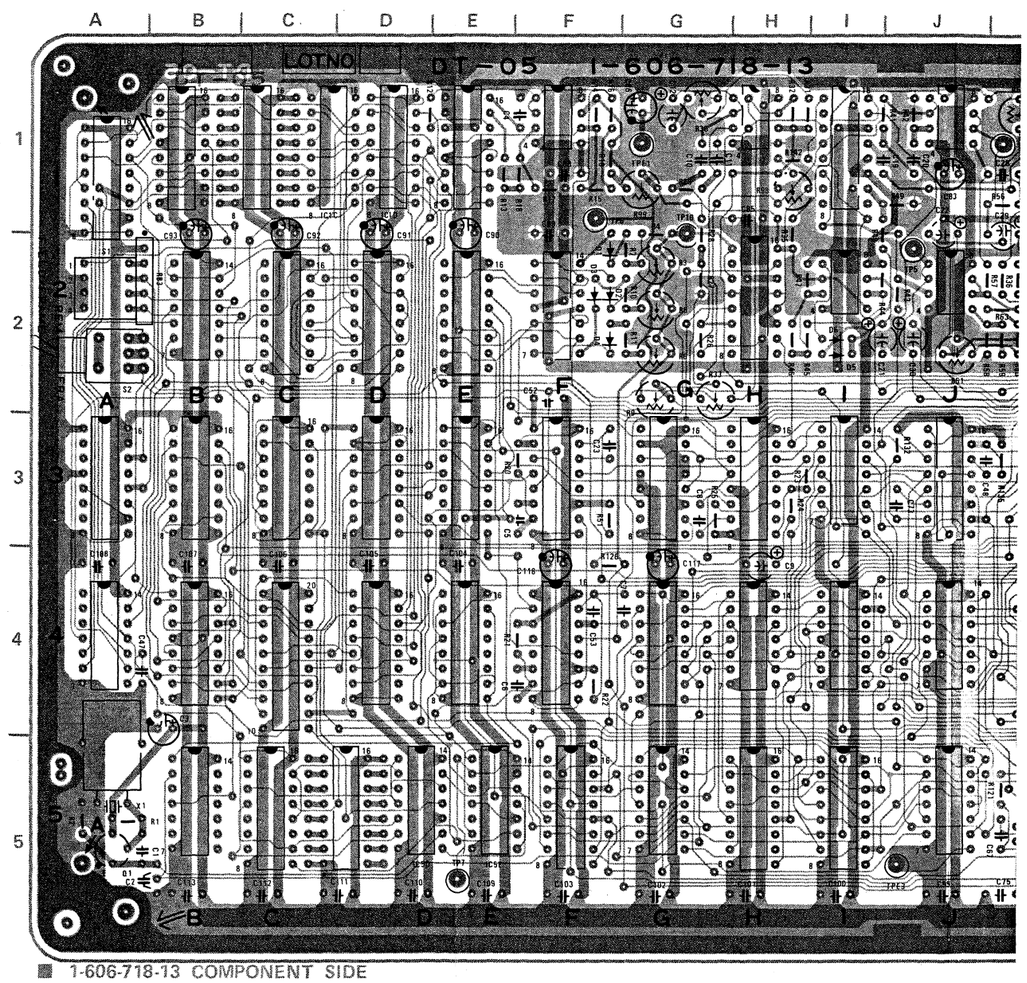

■ 1-606-718-13 COMPONENT SIDE

RB1, 2

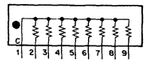

RB3

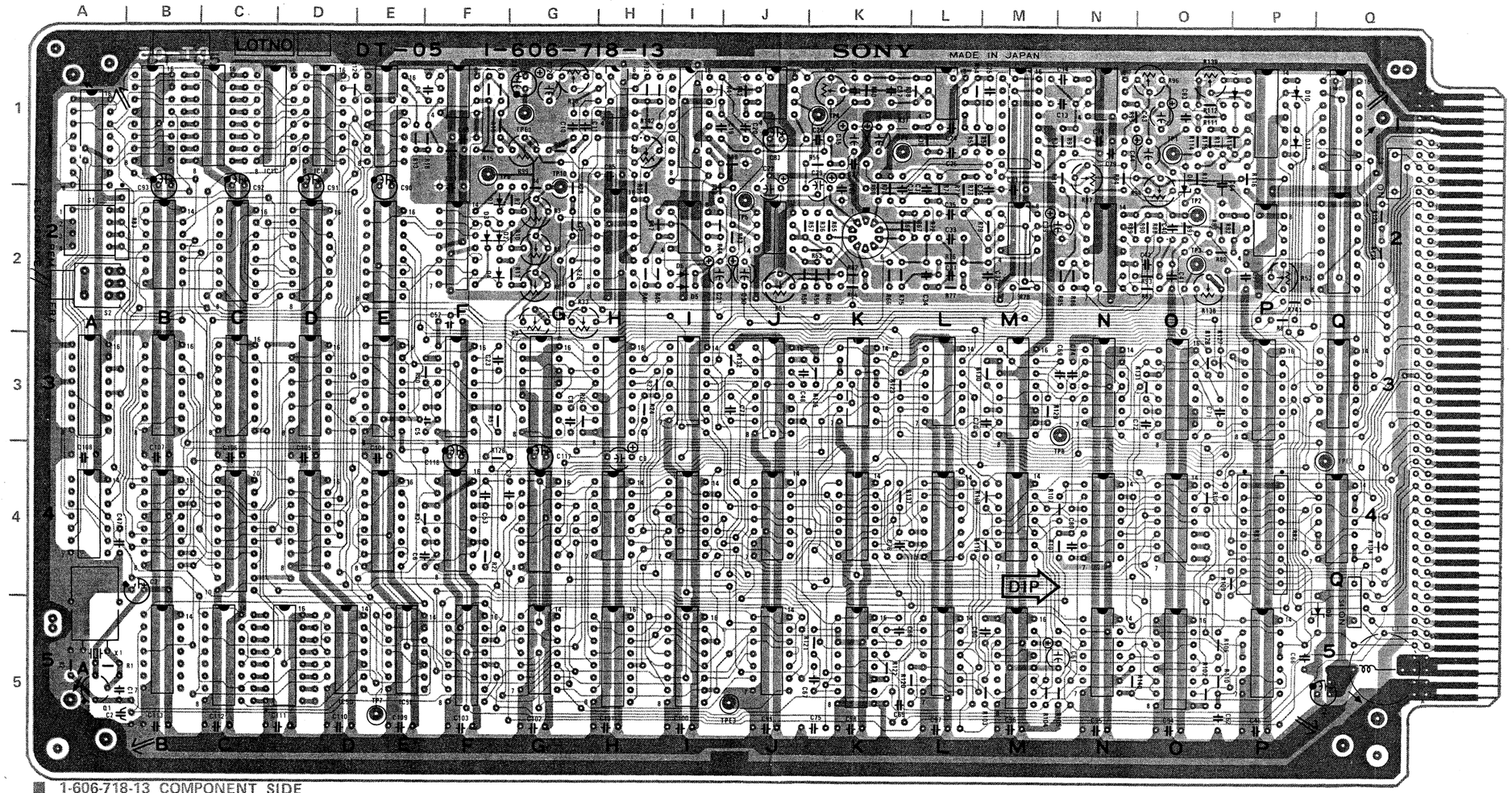

■ 1-606-718-13 COMPONENT SIDE

■ 1-606-718-13 SOLDER SIDE

DT-05 (1-606-718-13 & UP)

BVH-2000PS		IC4G	
(02/04 MODEL)		IC4H	
		IC4I	
BVH-2500P		IC4J	
		IC4K	
D1	2F	IC4L	
D2	2F	IC4M	
D3	2F	IC4N	
D4	2F	IC4O	
D5	2I	IC5B	
D6	2I	IC5C	
D7	1P	IC5C1	
D8	1O	IC5D	
D9	5O	IC5E	
D10	1P	IC5F	
D11	1P	IC5G	
		IC5H	
IC1A		IC5I	
IC1B		IC5J	
IC1C		IC5K	
IC1C1		IC5L	
IC1D		IC5M	
IC1E		IC5N	
IC1F		IC5O	
IC1H		IC5P	
IC1I			
IC1J		Q1	5A
IC1L			
IC1M		R3	2G
IC1N		R5	2G
IC1O		R6	2G
IC1P		R9	2G
IC2A		R30	1G
IC2B		R33	2G
IC2C		R50	1K
IC2D		R52	2P
IC2E		R61	2J
IC2F		R87	1N
IC2H		R94	1O
IC2I		R96	1O
IC2J		R98	1H
IC2K		R99	1G
IC2M		R138	2O
IC2N		R139	1O
IC2P			
IC2Q		RB1	4P
IC3A		RB2	4P
IC3B		RB3	2A
IC3D			
IC3E		S1	3C
IC3F		S2	2A
IC3G		S3	1O
IC3H		S4	4O
IC3I			
IC3J		TP1	1O
IC3K		TP2	2O
IC3L		TP3	2O
IC3M		TP4	1K
IC3N		TP5	2J
IC3O		TP6	1F
IC3P		TP7	5E
IC3Q		TP8	3N
IC4A		TP9	1K
IC4B		TP10	1G
IC4C			
IC4D		TPE1	1G
IC4E		TPE2	3O
IC4F		TPE3	5J
		X1	5A

RB1, 2

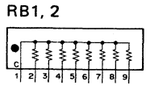

RB3

C101(9/13)

C101(10/13)

DT-05 BOARD; FOR 02/04 MODEL

DT Control

C101(11/13)

C101(12/13)

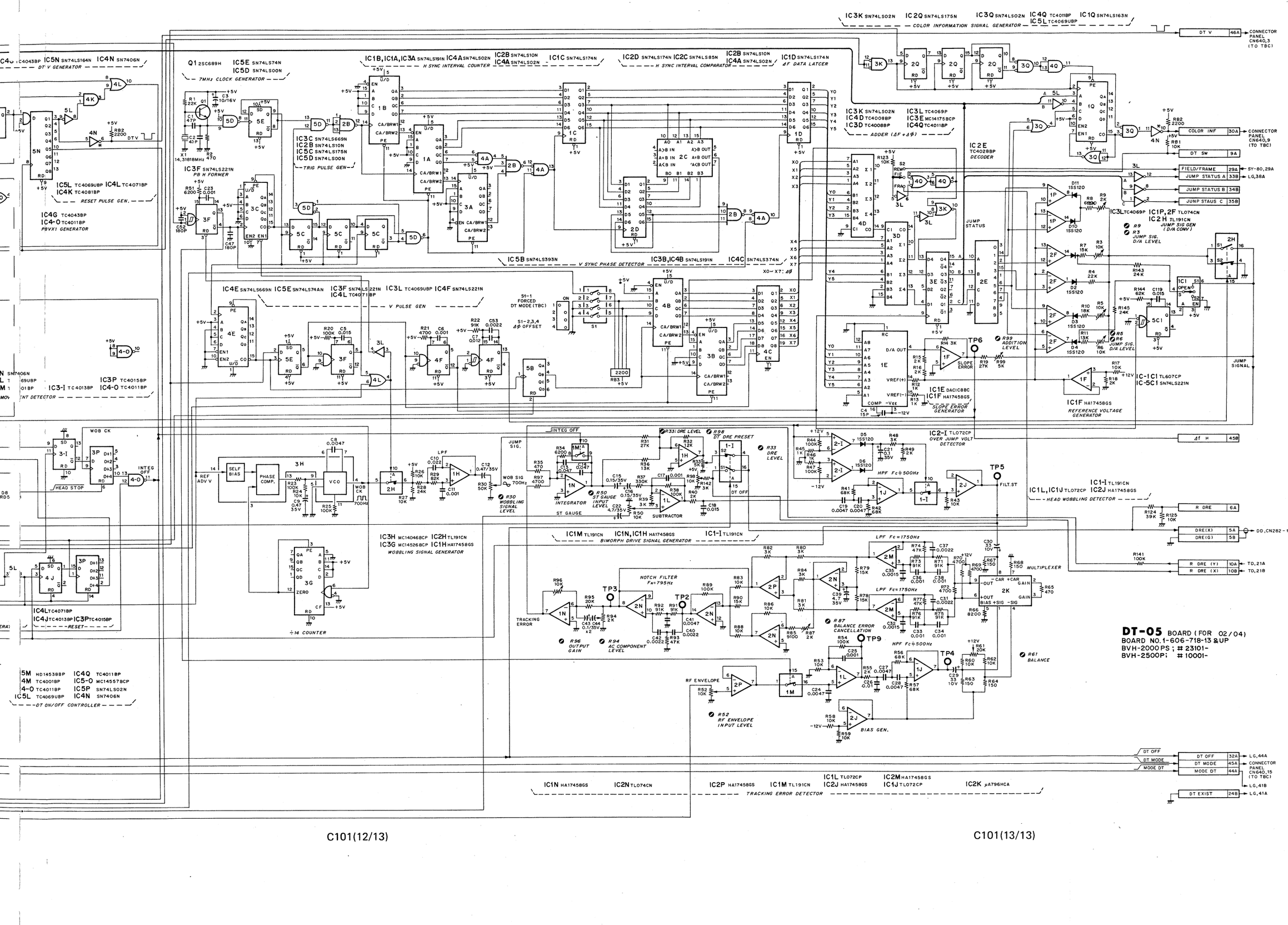
IC3K SN74LS02N IC2Q SN74LS175N IC3Q SN74LS02N IC4Q TC4011BP IC5L TC4069UBP IC1Q SN74LS163N
COLOR INFORMATION SIGNAL GENERATOR
DT V 46A CONNECTOR PANEL CN640,3 (TO TBC)
IC4O TC4043BP IC5N SN74LS164N IC4N SN7406N
DT V GENERATOR
Q1 2SC689H IC5E SN74LS74N IC5D SN74LS00N
7MHz CLOCK GENERATOR
IC1B,IC1A,IC3A SN74LS191N IC4A SN74LS02N IC2B SN74LS10N IC1C SN74LS174N
H SYNC INTERVAL COUNTER
IC2D SN74LS174N IC2C SN74LS85N IC2B SN74LS10N IC4A SN74LS02N IC1D SN74LS174N
H SYNC INTERVAL COMPARATOR
ΔF DATA LATCER
IC3K SN74LS02N IC4D TC4008BP IC3D TC4008BP IC3L TC4069P IC3E MC14175BCP IC4Q TC4011BP
ADDER (ΔF+Δφ)
IC2E TC4028BP DECODER
IC3C SN74LS669N IC2B SN74LS10N IC5C SN74LS175N IC5D SN74LS00N
TRIG PULSE GEN
IC3F SN74LS221N PB H FORMER
IC5L TC4069UBP IC4L TC4071BP IC4K TC4081BP
RESET PULSE GEN.
IC4G TC4043BP IC4-O TC4011BP PBVX1 GENERATOR
IC5B SN74LS393N IC3B,IC4B SN74LS191N IC4C SN74LS374N
V SYNC PHASE DETECTOR
X0~X7: Δφ
IC4E SN74LS669N IC5E SN74LS74AN IC3F SN74LS221N IC3L TC4069UBP IC4F SN74LS221N IC4L TC4071BP
V PULSE GEN
S1-1 FORCED DT MODE (TBC)
S1-2,3,4 Δφ OFFSET
IC3P TC4015BP IC4-O TC4011BP IC3-I TC4013BP
DT DETECTOR
JUMP STATUS
IC3L TC4069P IC1P,2F TL074CN IC2H TL191CN JUMP SIG GEN (D/A CONV)
R9 R3 JUMP SIG. D/A LEVEL
R99 ADDITION LEVEL
R5 R6 JUMP SIG. D/A LEVEL
IC1-1C1 TL607CP IC-5C1 SN74LS221N
IC1E DAC18BC IC1F HA17458GS SLOPE ERROR GENERATOR
IC1F HA17458GS REFERENCE VOLTAGE GENERATOR
COLOR INF 30A CONNECTOR PANEL CN640,9 (TO TBC)
DT SW 9A
FIELD/FRAME 29A SY-80,29A
JUMP STATUS A 33B LG,38A
JUMP STATUS B 34B
JUNP STAUS C 35B
JUMP SIGNAL
Δf H 45B
WOB CK
SELF BIAS
PHASE COMP.
VCO
REF ADV V
WOB CK 700Hz
INTEG OFF
JUMP SIG.
WOB SIG 700Hz
R30 WOBBLING SIGNAL LEVEL
R33: DRE LEVEL R98 DT DRE PRESET
R33 DRE LEVEL
R50 ST GAUGE INPUT LEVEL
INTEGRATOR
ST GAUGE
SUBTRACTOR
DT OFF
IC2-I TL072CP OVER JUMP VOLT DETECTOR
HPF Fc≒500Hz
IC1-1 TL191CN IC1L,IC1J TL072CP IC2J HA17458GS
HEAD WOBBLING DETECTOR
TP5 FILT.ST
R DRE 6A
DRE(X) 5A
DRE(G) 5B
DD,CN282-1
R DRE (Y) 10A TD,21A
R DRE (X) 10B TD,21B
IC3H MC14046BCP IC2H TL191CN IC3G MC14526BCP IC1H HA17458GS
WOBBLING SIGNAL GENERATOR
÷14 COUNTER
IC1M TL191CN IC1N,IC1H HA17458GS IC1-I TL191CN
BIMORPH DRIVE SIGNAL GENERATOR
LPF Fc=1750Hz
NOTCH FILTER Fo=795Hz
TRACKING ERROR
R96 OUTPUT GAIN
R94 AC COMPONENT LEVEL
R87 BALANCE ERROR CANCELLATION
MULTIPLEXER
HPF Fc≒500Hz
R61 BALANCE
RF ENVELOPE
R52 RF ENVELOPE INPUT LEVEL
BIAS GEN.
DT OFF
DT MODE
MODE DT
DT OFF 32A LG,44A
DT MODE 45A CONNECTOR PANEL CN640,15 (TO TBC)
MODE DT 44A LG,41B
DT EXIST 24B LG,41A
IC1N HA17458GS IC2N TL074CN IC2P HA17458GS IC1M TL191CN IC1L TL072CP IC2J HA17458GS IC2M HA17458GS IC1J TL072CP IC2K μA796HCA
TRACKING ERROR DETECTOR
DT-05 BOARD (FOR 02/04)
BOARD NO.1-606-718-13 &UP
BVH-2000PS ; # 23101-
BVH-2500P; # 10001-
IC5M HD14538BP IC4M TC4001BP IC4-O TC4011BP IC5L TC4069UBP IC4Q TC4011BP IC5-O MC14557BCP IC5P SN74LS02N IC4N SN7406N
DT ON/OFF CONTROLLER
IC4L TC4071BP IC4J TC4013BP IC3P TC4015BP
RESET

MB-14 BOARD

Mother Board

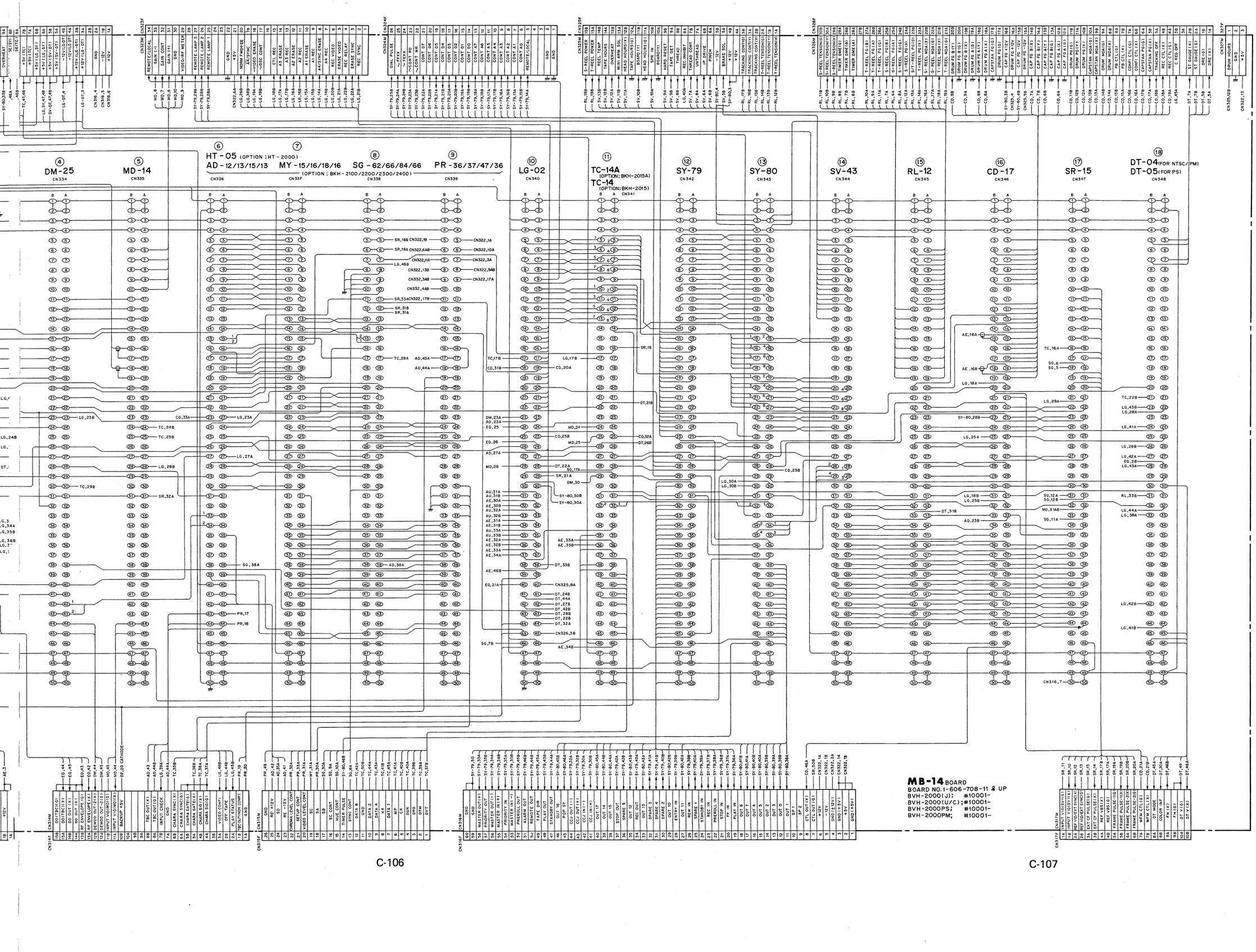

The following connections are added.

*EQ,31A ⟷ DM,31B
DM,38A ⟷ LG,43A
J; #10401 & UP
U/C;#10401 & UP
PS; #10001 & UP
PM; #10001 & UP

*MD,46B ⟷ SY-80,29B
J; #10501 & UP
U/C;#10501 & UP
PS; #10301 & UP
PM; #10001 & UP

*LG,17B ⟷ TC,17B
LG,25B ⟷ TC,25A
LG,26B ⟷ TC,26B
LG,37B ⟷ TC,34A
J; #22301 & UP
U/C;#22501 & UP
PS; #22301 & UP
PM; #20201 & UP

*EQ,22A ⟷ DM,32B
J; #22401 & UP
U/C;#22601 & UP
PS; #22401 & UP
PM; #20201 & UP

FRAME WIRING; CARD RACK; FOR 00/02 MODELS

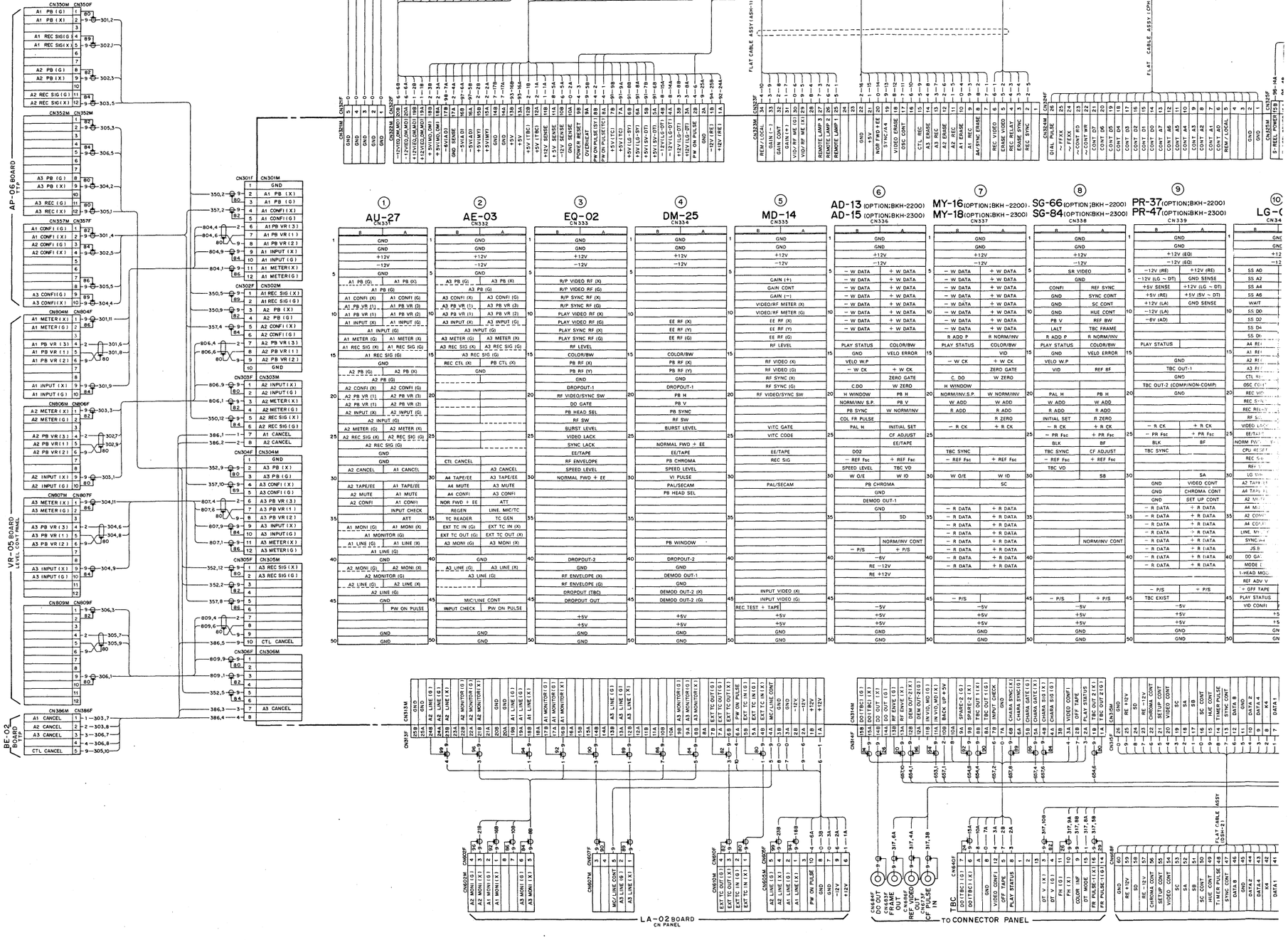

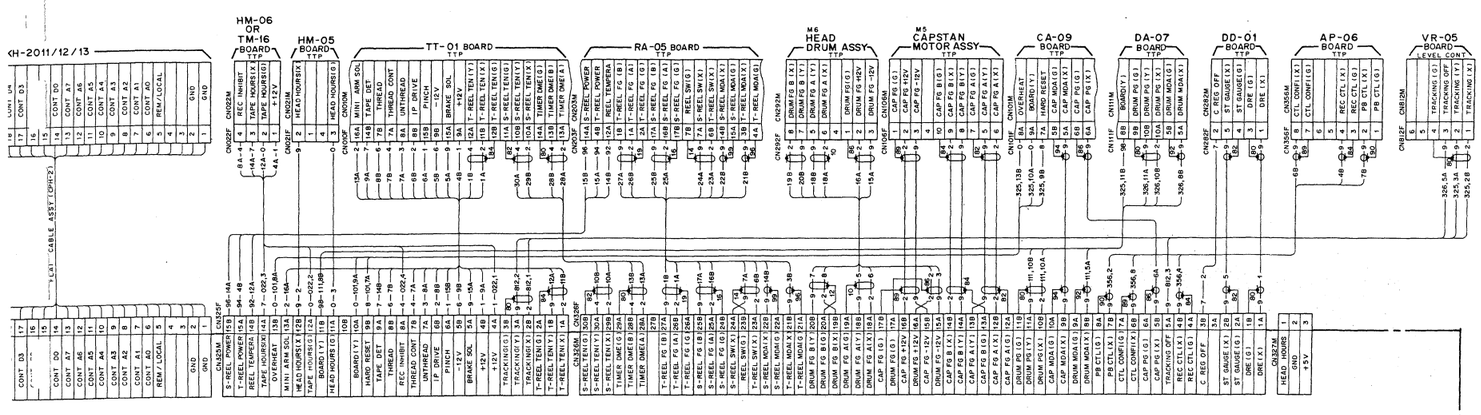

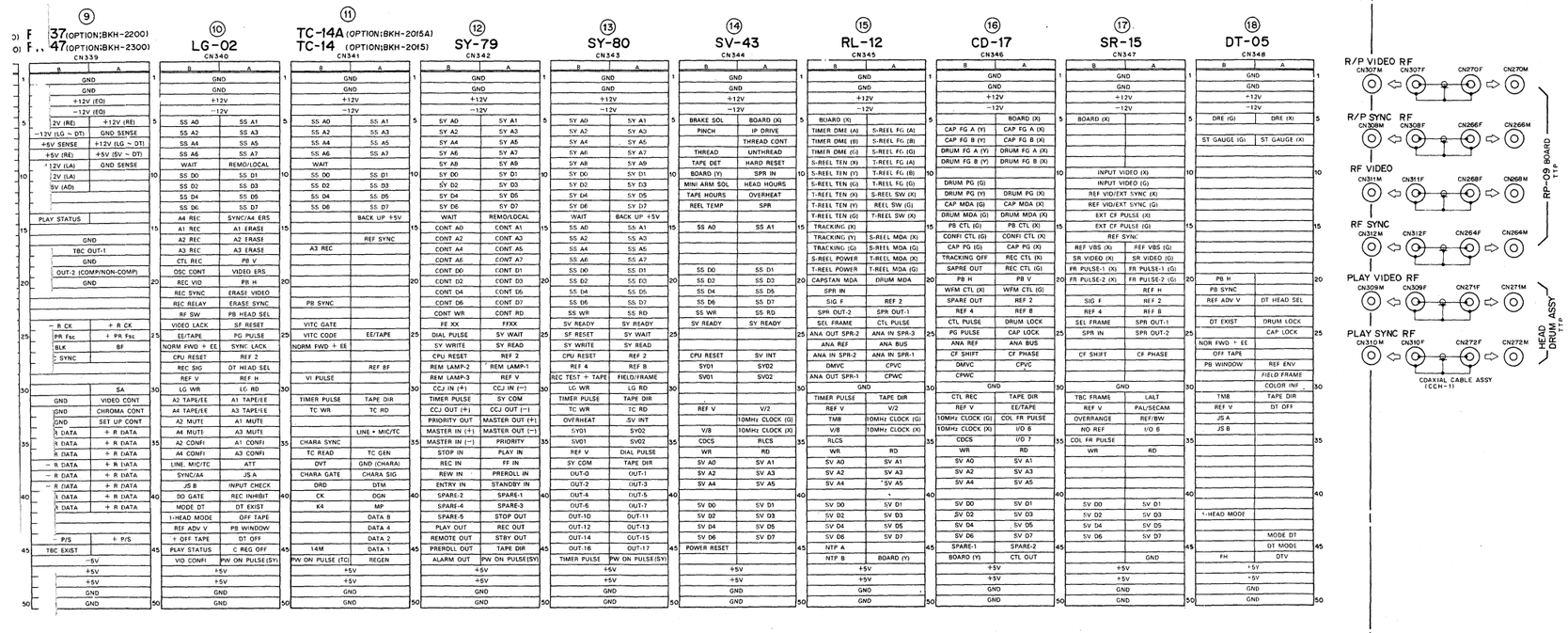

FRAME WIRING
CARD RACK (00/02)
BVH-2000PS ; # 10001—

FRAME WIRING; CARD RACK; FOR 04 MODEL

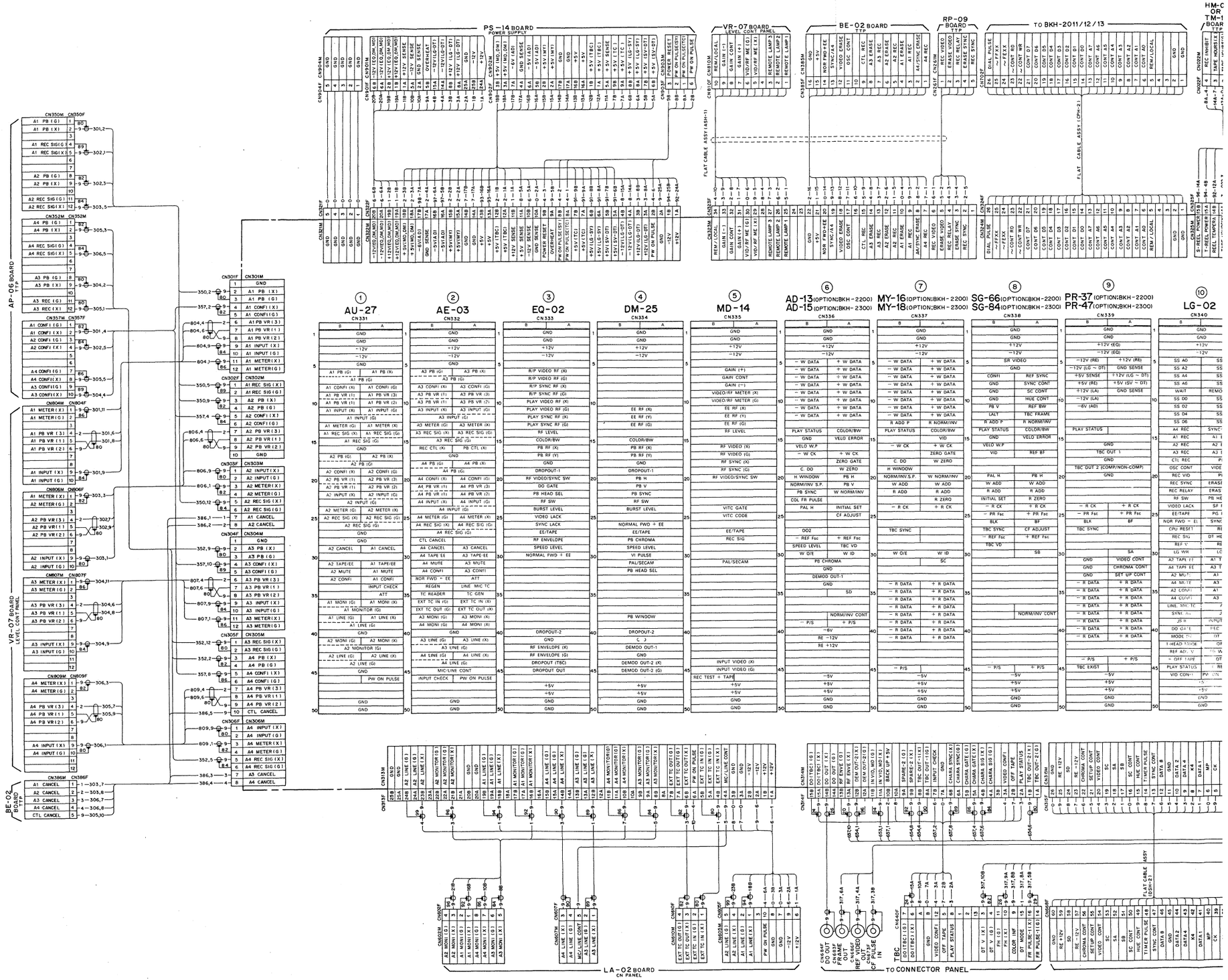

C-114(6/9)

C-114(7/9)

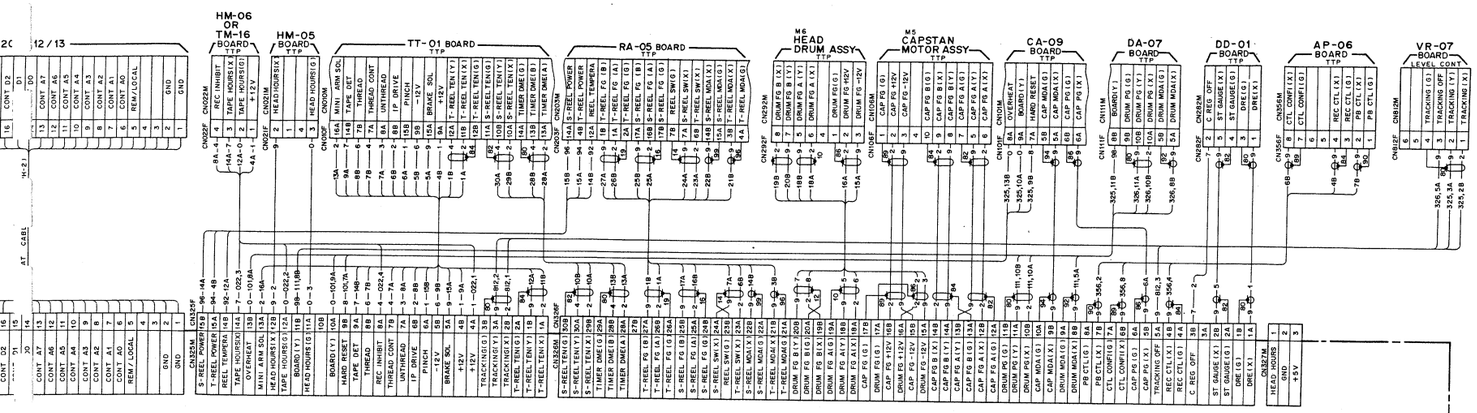

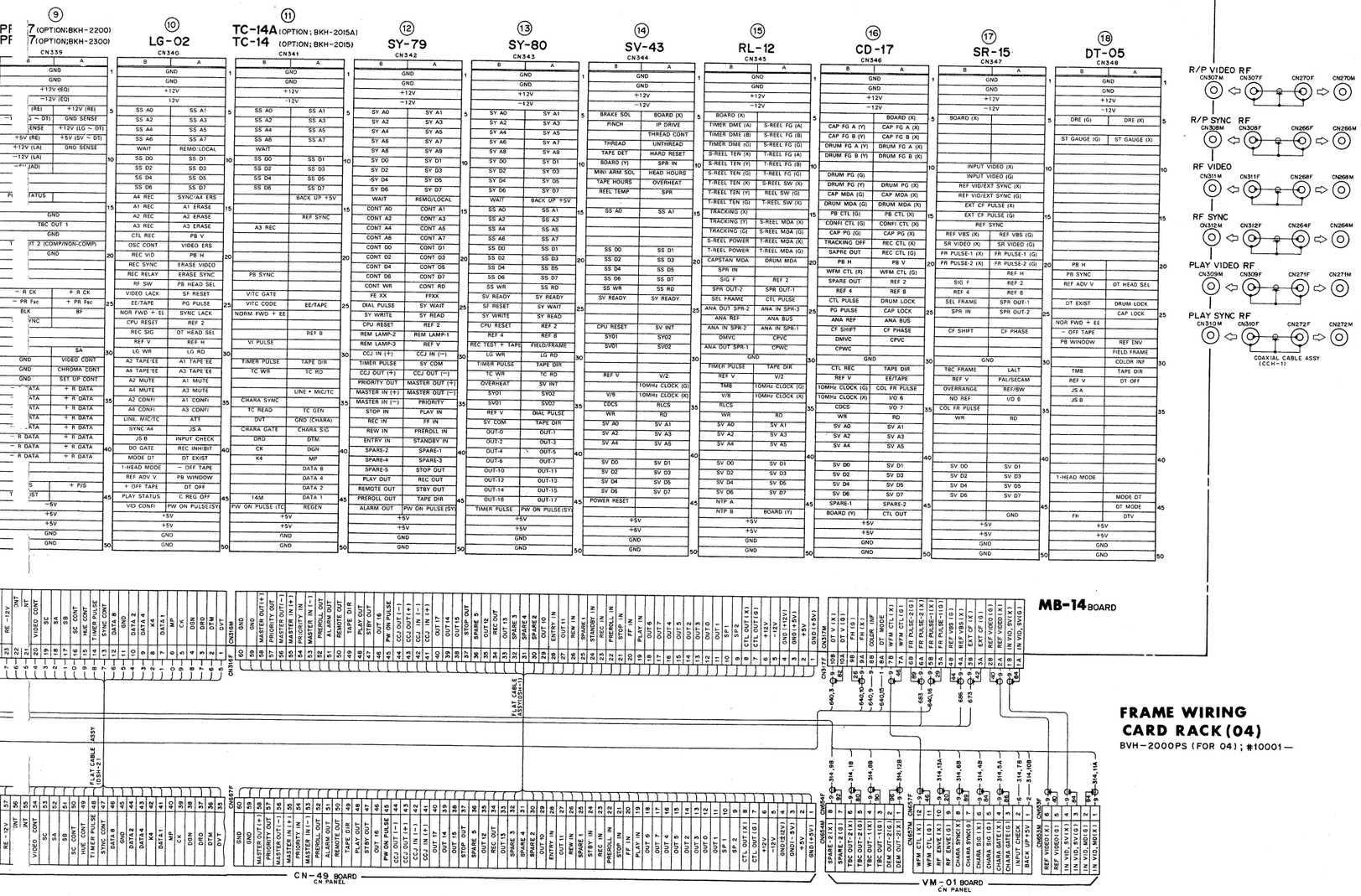

FRAME WIRING CARD RACK (04)

BVH-2000PS (FOR 04) ; #10001—

AP-06 BOARD (1-606-673-15)

Component Side

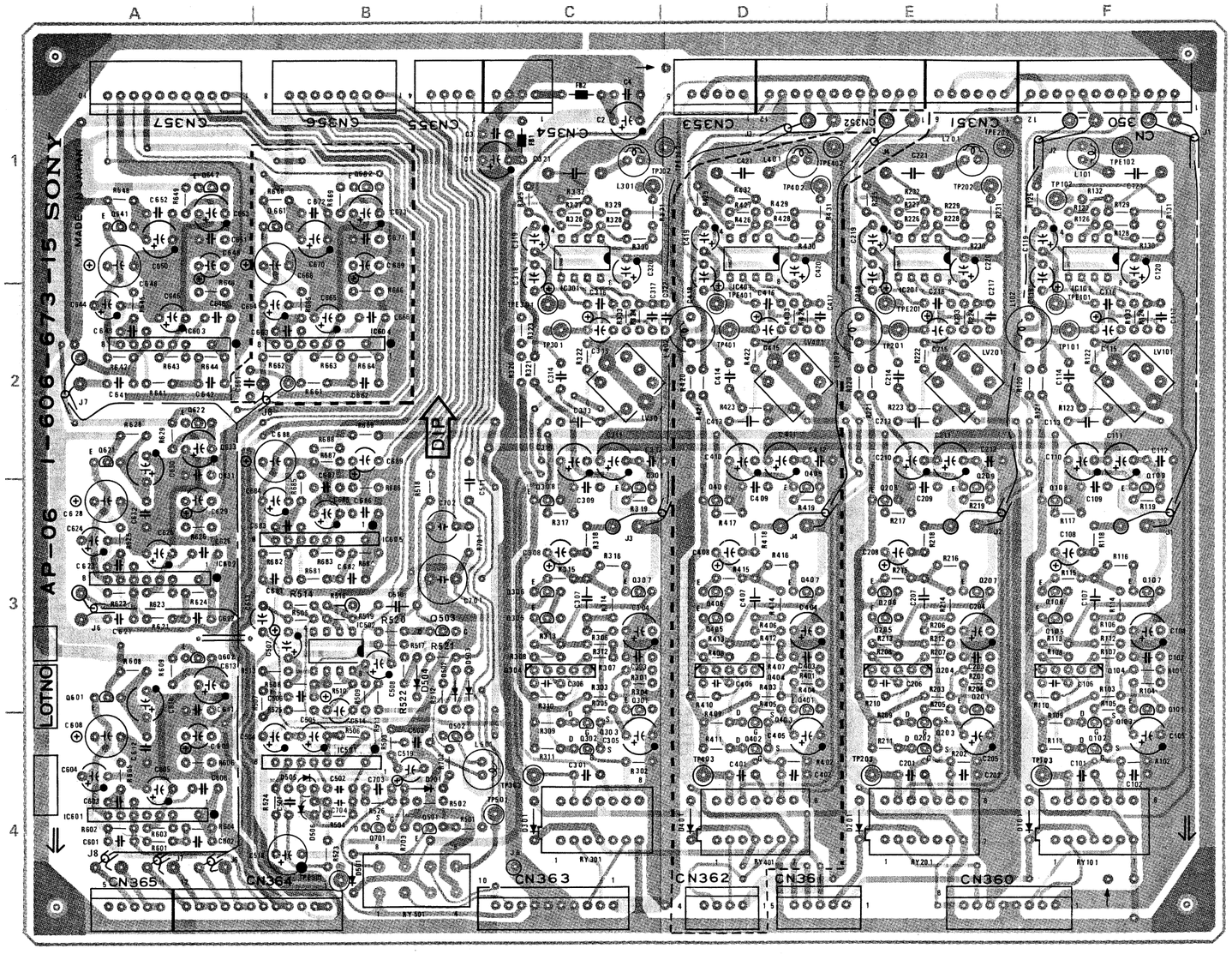

■ 1-606-673-15 COMPONENT SIDE

■ 1-606-673-15

AP-06 (1-606-673-13 & UP)		
BVH-2000(J,U/C)	Q501	4B
	Q502	4B
BVH-2000PS		
(00/02 MODEL)	(PS)	
	Q503	3B
BVH-2000PM		
BVH-2500(J,U/C)	Q601	3A
	Q602	3A
CN350M	Q621	2A
1F	Q622	2A
CN351M	Q641	1A
1E	Q642	1A
CN352M	Q701	4B
1E		
CN353M	RY101	4F
1D	RY201	4E
CN354M	RY301	4C
1C	RY501	4B
CN355M		
1B	TP101	2F
CN356M	TP102	1F
1B	TP103	4F
CN357M	TP201	2E
1A	TP202	1E
CN360M	TP203	4E
4F	TP301	2C
CN361M	TP302	1C
4D	TP303	4C
CN363M	TP501	4C
4C		
CN364M	TPE101	
4B		2F
	TPE102	
D101 4F		1F
D201 4E	TPE201	
D301 4C		2E
D501 4B	TPE202	
D502 3B		1E
D503 3B	TPE301	
		2C
(PS)	TPE302	
D504 3B		1C
	TPE501	
D505 4B		4B
D506 4B		
D701 4B		
IC101 1F		
IC201 1E		
IC301 1C		
IC501 4B		
IC502 3B		
IC601 4A		
IC602 3A		
IC603 2A		
IC605 3B		
LV101 2F		
LV201 2E		
LV301 2C		
Q101 3F		
Q102 4F		
Q103 4F		
Q104 3F		
Q105 3F		
Q106 3F		
Q107 3F		
Q108 3F		
Q109 3F		
Q201 3E		
Q202 4E		
Q203 4E		
Q204 3E		
Q205 3E		
Q206 3E		
Q207 3E		
Q208 3E		
Q209 3E		
Q301 3C		
Q302 4C		
Q303 4C		
Q304 3C		
Q305 3C		
Q306 3C		
Q307 3C		
Q308 3C		
Q309 3C		

AP-06 (1-606-673-13 & UP)		
BVH-2000PS	Q401	3D
(04 MODEL)	Q402	4D
	Q403	4D
CN350M	Q404	3D
1F	Q405	3D
CN351M	Q406	3D
1E	Q407	3D
CN352M	Q408	3D
1E	Q409	3D
CN353M	Q501	4B
1D	Q502	4B
CN354M	Q503	3B
1C	Q601	3A
CN355M	Q602	3A
1B	Q621	2A
CN356M	Q622	2A
1B	Q641	1A
CN357M	Q642	1A
1A	Q661	1B
CN360M	Q662	1B
4F	Q701	4B
CN361M		
4D	RY101	4F
CN362M	RY201	4E
4D	RY301	4C
CN363M	RY401	4D
4C	RY501	4B
CN364M		
4B	TP101	2F
CN365M	TP102	1F
4A	TP103	4F
	TP201	2E
D101 4F	TP202	1E
D201 4E	TP203	4E
D301 4C	TP301	2C
D401 4D	TP302	1C
D501 4B	TP303	4C
D502 3B	TP401	2D
D503 3B	TP402	1D
D504 3B	TP403	4D
D505 4B	TP501	4C
D506 4B		
D701 4B	TPE101	
		2F
IC101 1F	TPE102	
IC201 1E		1F
IC301 1C	TPE201	
IC401 1D		2E
IC501 4B	TPE202	
IC502 3B		1E
IC601 4A	TPE301	
IC602 3A		2C
IC603 2A	TPE302	
IC604 2B		1C
IC605 3B	TPE401	
		2D
LV101 2F	TPE402	
LV201 2E		1D
LV301 2C	TPE501	
LV401 2D		4B
Q101 3F		
Q102 4F		
Q103 4F		
Q104 3F		
Q105 3F		
Q106 3F		
Q107 3F		
Q108 3F		
Q109 3F		
Q201 3E		
Q202 4E		
Q203 4E		
Q204 3E		
Q205 3E		
Q206 3E		
Q207 3E		
Q208 3E		
Q209 3E		
Q301 3C		
Q302 4C		
Q303 4C		
Q304 3C		
Q305 3C		
Q306 3C		
Q307 3C		
Q308 3C		
Q309 3C		

AP-06 BOARD

Audio/CTL, REC/PB Preamplifier

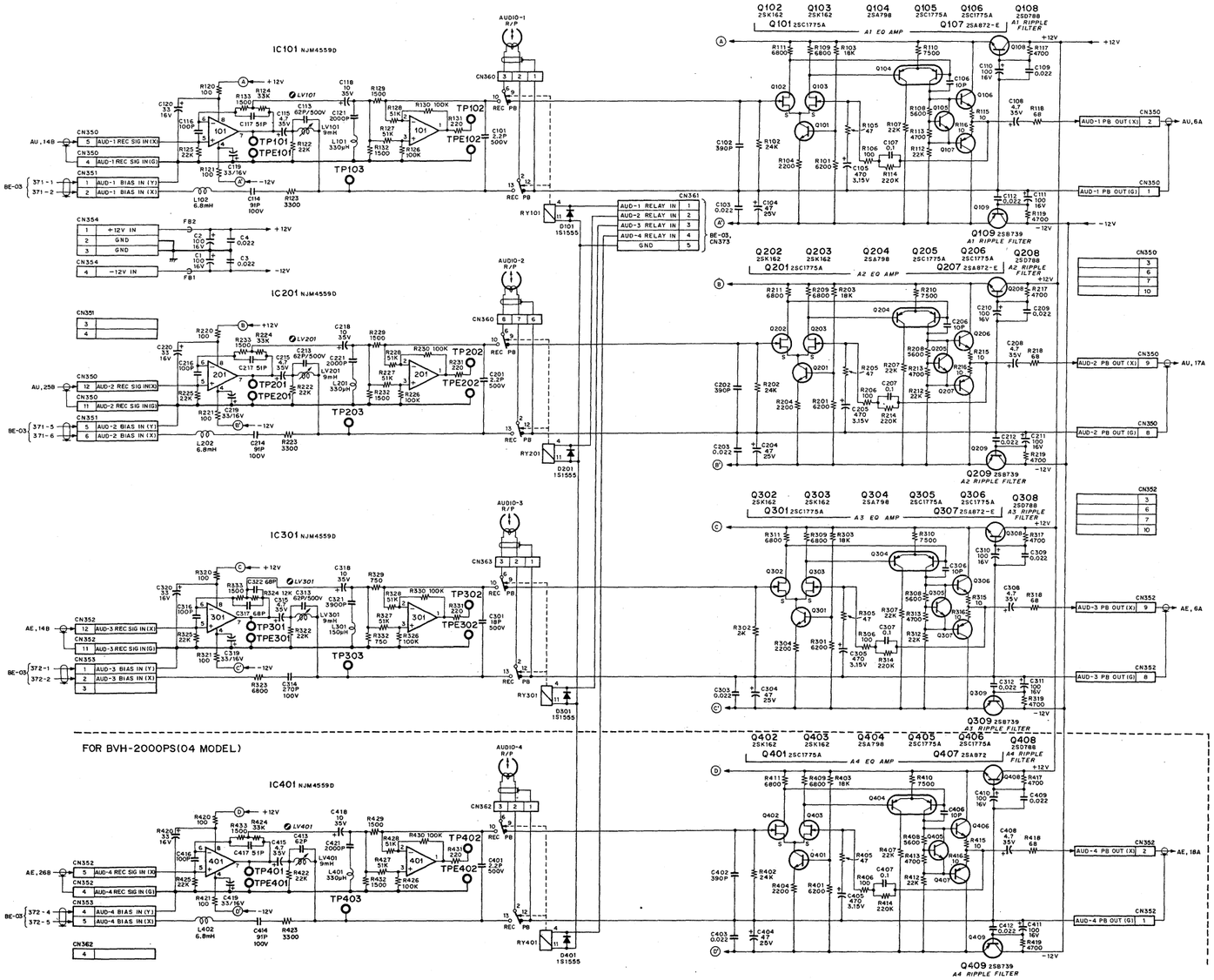

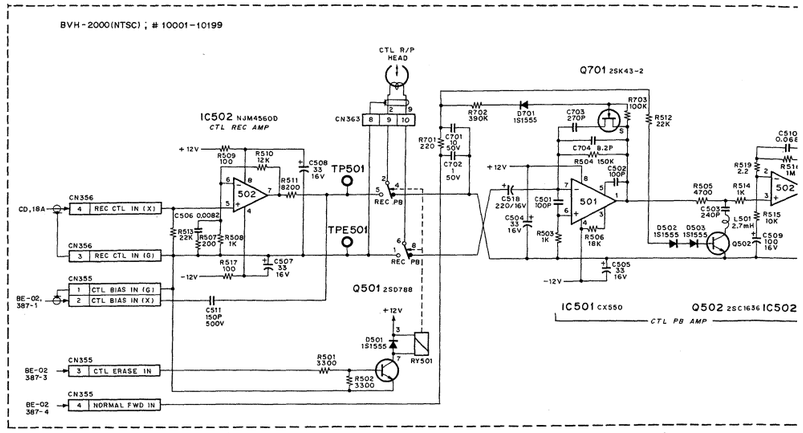

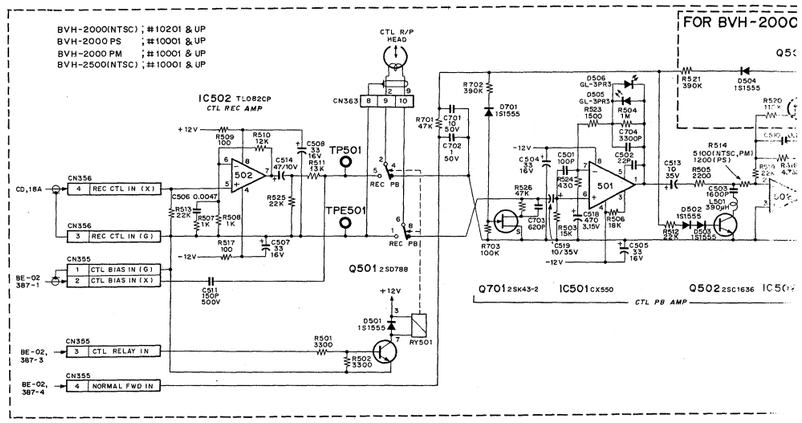

AP-06 BOARD

BOARD NO. 1-606-673-1
BVH-2000(J); #10001
BVH-2000(U/CI); #10001
BVH-2000PS; #10001
BVH-2000PM; #10001

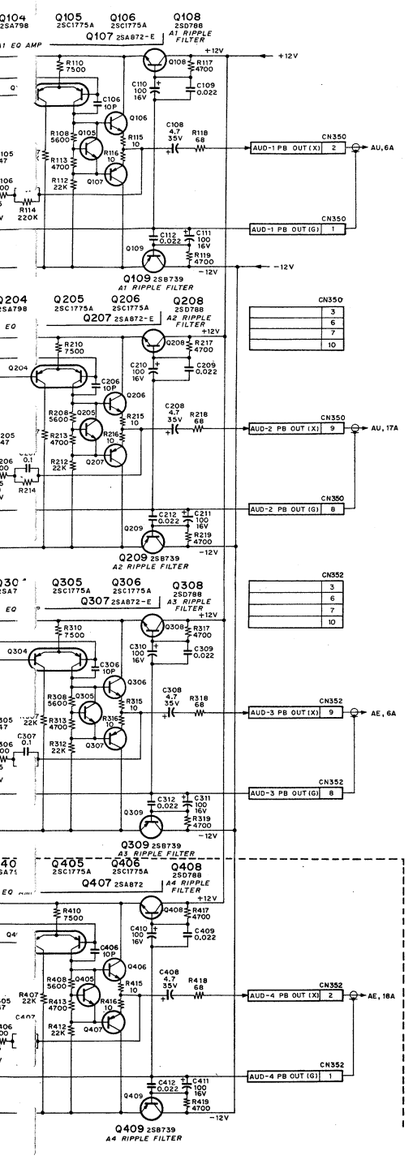

BVH-2000(NTSC) ; # 10001-10199

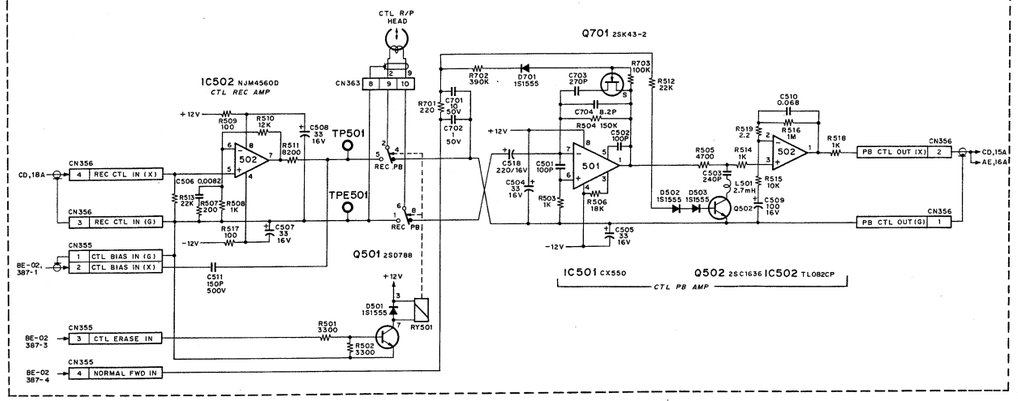

BVH-2000(NTSC) ; #10201 & UP
BVH-2000 PS ; #10001 & UP
BVH-2000 PM ; #10001 & UP
BVH-2500(NTSC) ; #10001 & UP

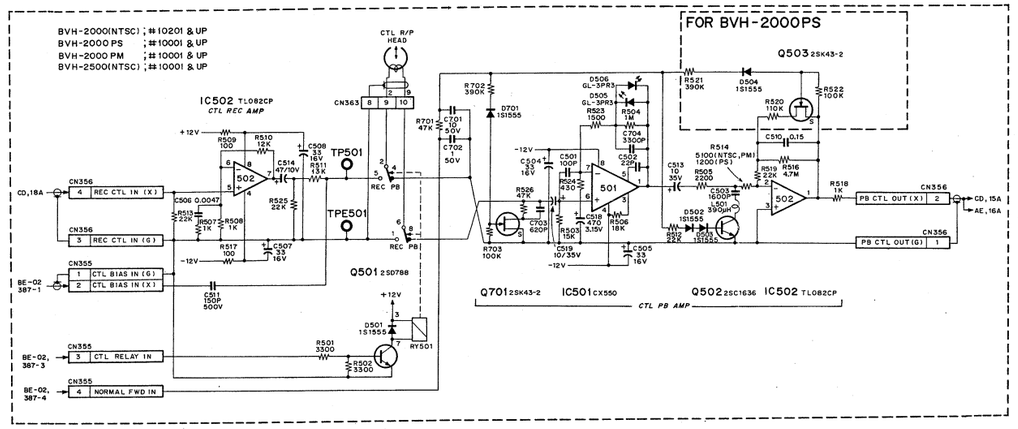

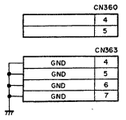

AP-06 BOARD

BOARD NO. 1-606-673-11,12,13 & UP

BVH-2000(J);	#10001-	BVH-2500(J);	#10001-
BVH-2000(U/C);	#10001-	BVH-2500(U/C);	#10001-
BVH-2000PS;	#10001-		
BVH-2000PM;	#10001-		

FOR BVH-2000/PS/PM(02/04 MODEL)
FOR BVH-2500

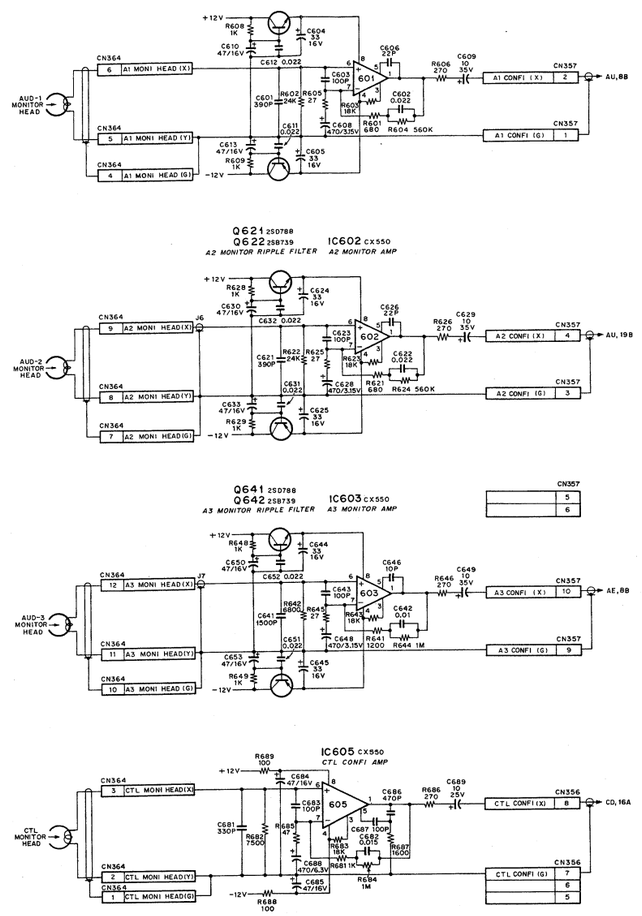

FOR BVH-2000PS(04 MODEL)

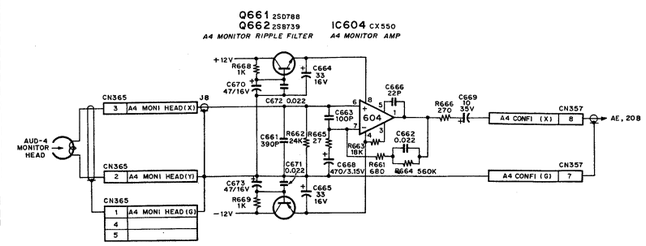

BE-02 BOARD (1-606-674-12)

Component Side

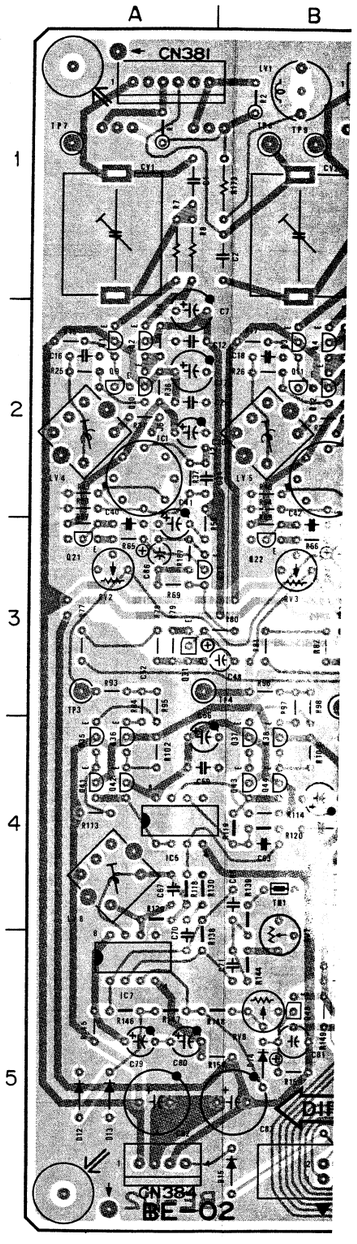

1-606-674-12. COMPOI

BE-02 BOARD (1-606-674-12)

Component Side

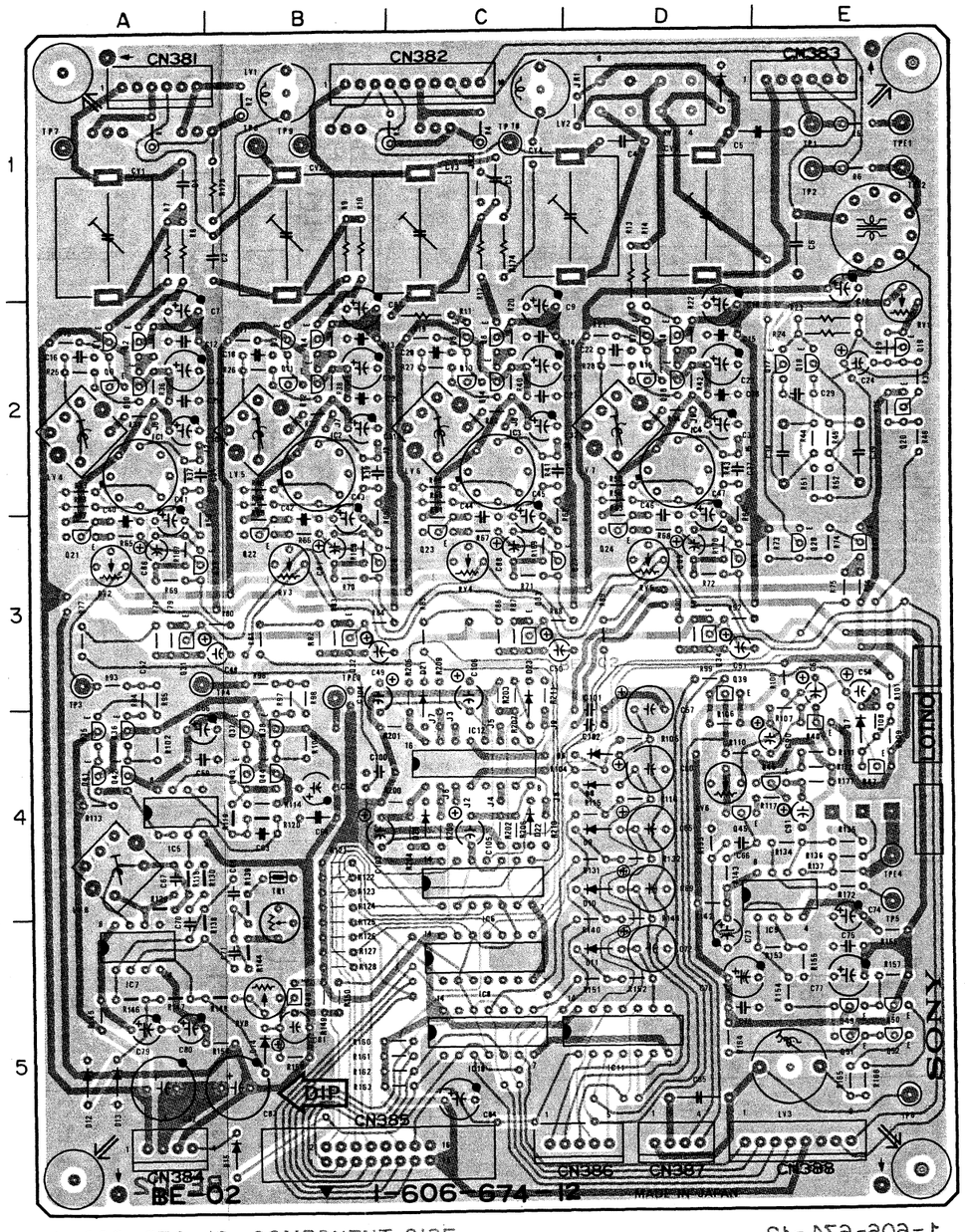

1-606-674-12. COMPONENT SIDE

1-606-674-12

BE-02 (1-606-674-12)

BVH-2000(J,U/C)
BVH-2000PS
BVH-2000PM

CN381M 1A
CN382M 1C
CN383M 1E
CN384M 5A
CN385M 5B
CN386M 5D
CN387M 5D
CN388M 5E

CV1 1A
CV2 1B
CV3 1C
(PS 04 MODEL)
CV4 1C
CV5 1D

(PS 04 MODEL)
D1 1D
D6 4D
D7 4E
D8 4D
D9 4D
D10 4D
D11 5D
D12 5A
D13 5A
D14 5B
D15 5B
D20 4C
D21 3C
D22 4C
D23 3C

IC1 2A
IC2 2B
IC3 2C
IC4 2D
IC5 4A
IC6 4C
IC7 5A
IC8 4C
IC9 4E
IC10 5C
IC11 5D
IC12 4C

LV1 1B
(PS 04 MODEL)
LV2 1C
LV3 5E
LV4 2A
LV5 2B
LV6 2C
LV7 2D
LV8 4A

Q1 2A
Q2 2A
Q3 2B
Q4 2B
Q5 2C
Q6 2C
Q7 2D
Q8 2D
Q9 2A
Q10 2A
Q11 2B
Q12 2B
Q13 2C
Q14 2C
Q15 2D
Q16 2D
Q17 2E
Q18 2E
Q19 2E
Q20 2E
Q21 3A
Q22 3B
Q23 3C
Q24 3D
Q25 3A
Q26 3B
Q27 3C
Q28 3D
(PS 04 MODEL)
Q29 3E
Q30 3E
Q31 3A
Q32 3B
Q33 3C
Q34 3D
Q35 4A
Q36 4A
Q37 4B
Q38 4B
Q39 3D
Q40 4E
Q41 4A
Q42 4A
Q43 4B
Q44 4B
Q45 4D
Q46 4E
Q47 4E
Q48 5B
Q49 5E
Q50 5E
Q51 5E
Q52 5E

RV1 2E
(PS 04 MODEL)
RV2 3A
RV3 3B
RV4 3C
RV5 3D
RV6 4D
RV7 5B
RV8 5B
(PS 04 MODEL)
RV9 4D

(PS 04 MODEL)
RY1 1D

TH1 4B
TH2 4A
TH3 2A
TH4 2B
TH5 2C
TH6 2D

TP1 1E
TP2 1E
TP3 3A
TP4 3A
TP5 4E
TP6 5E
TP7 1A
TP8 1B
TP9 1B
(PS 04 MODEL)
TP10 1C

TPE1 1E
TPE2 1E
TPE3 3B
TPE4 4E

BE-02 BOARD

Audio Bias/Erase Oscillator

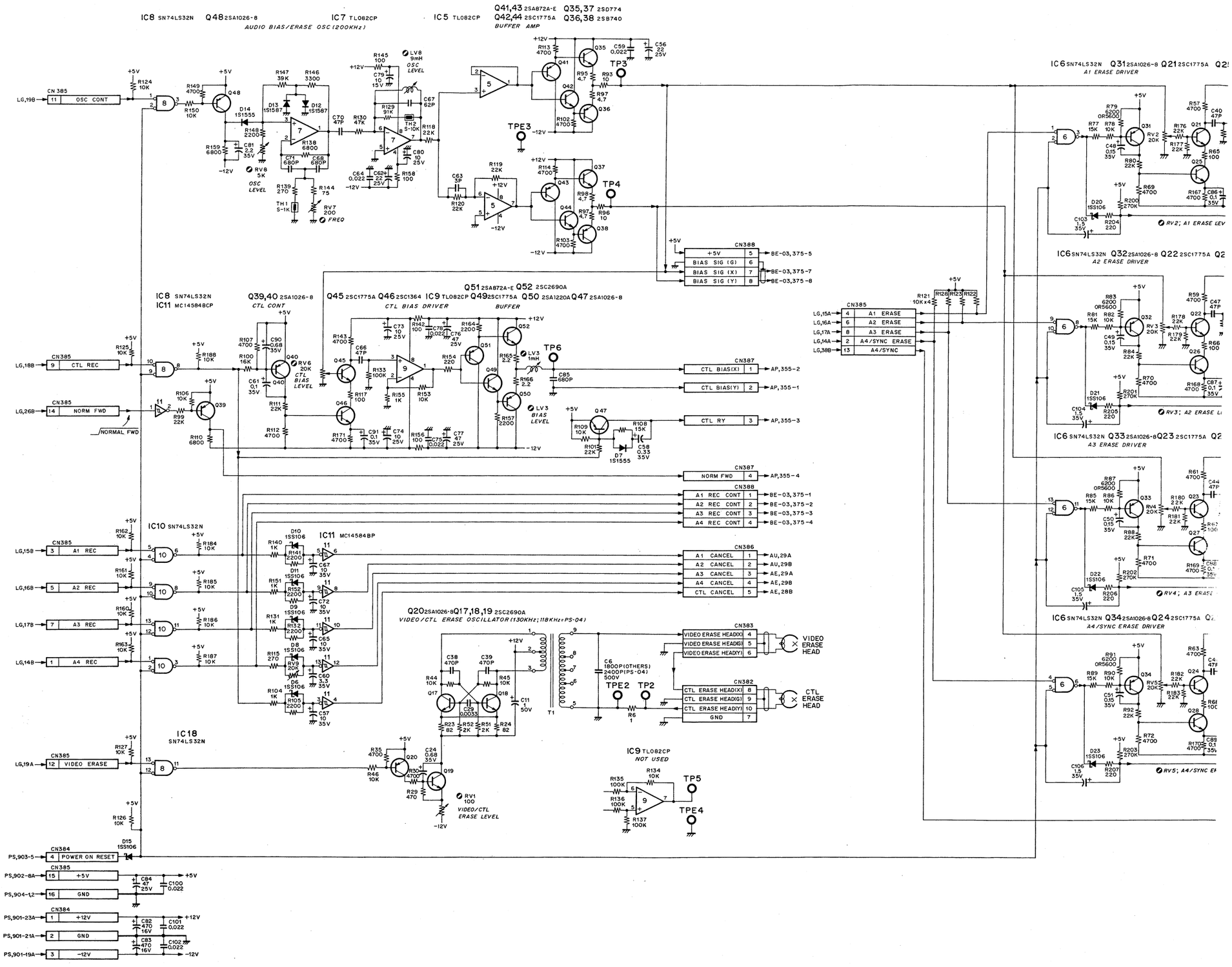

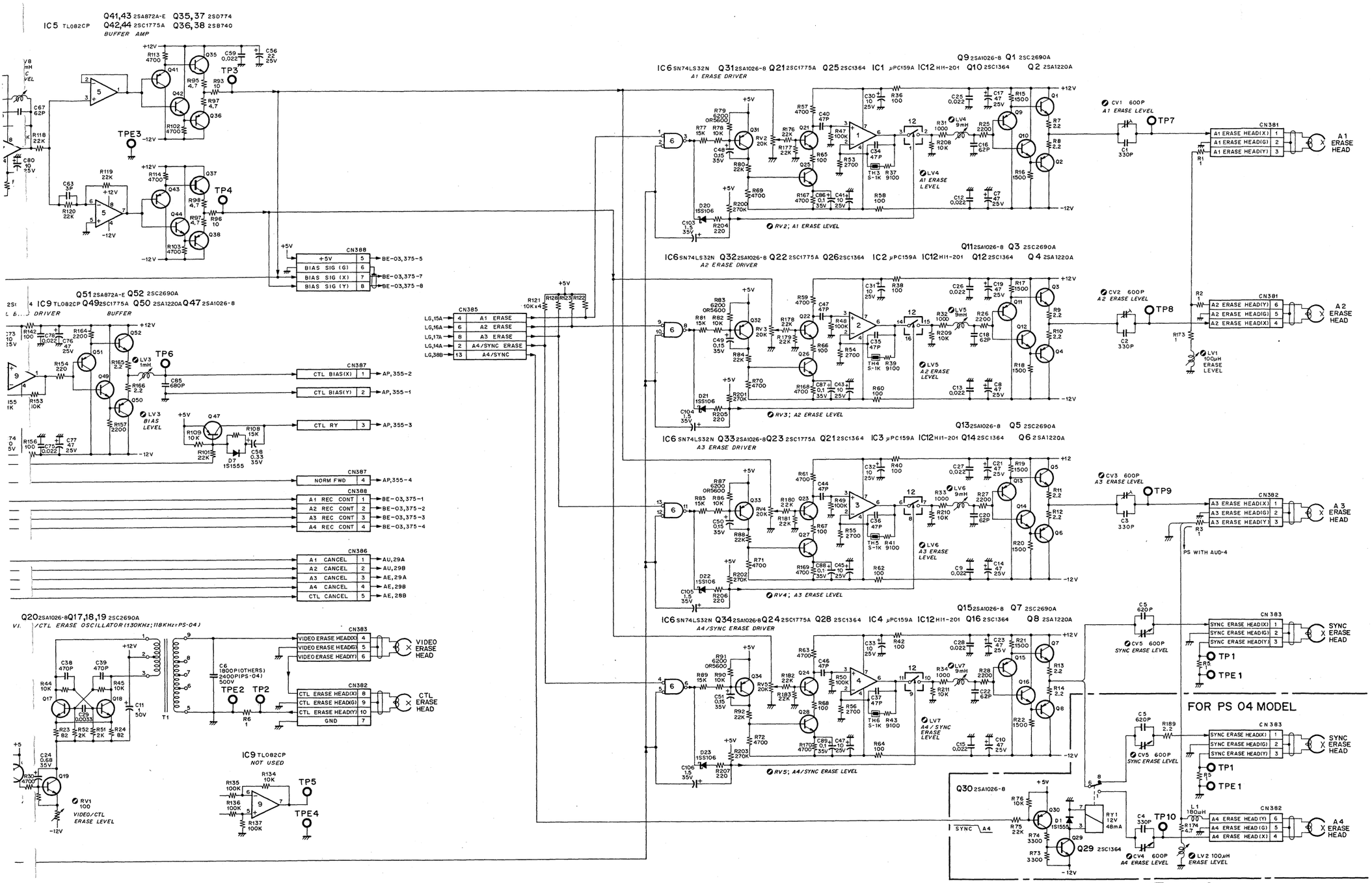

BE-02 BOARD

BOARD NO. 1-606-674-11/-12
BVH-2000(J); #10001-11499
BVH-2000(U/C); #10001-11599
BVH-2000PS; #10001-11399
BVH-2000PM; #10001-10199

BE-02 BOARD (1-606-674-14)

Component Side

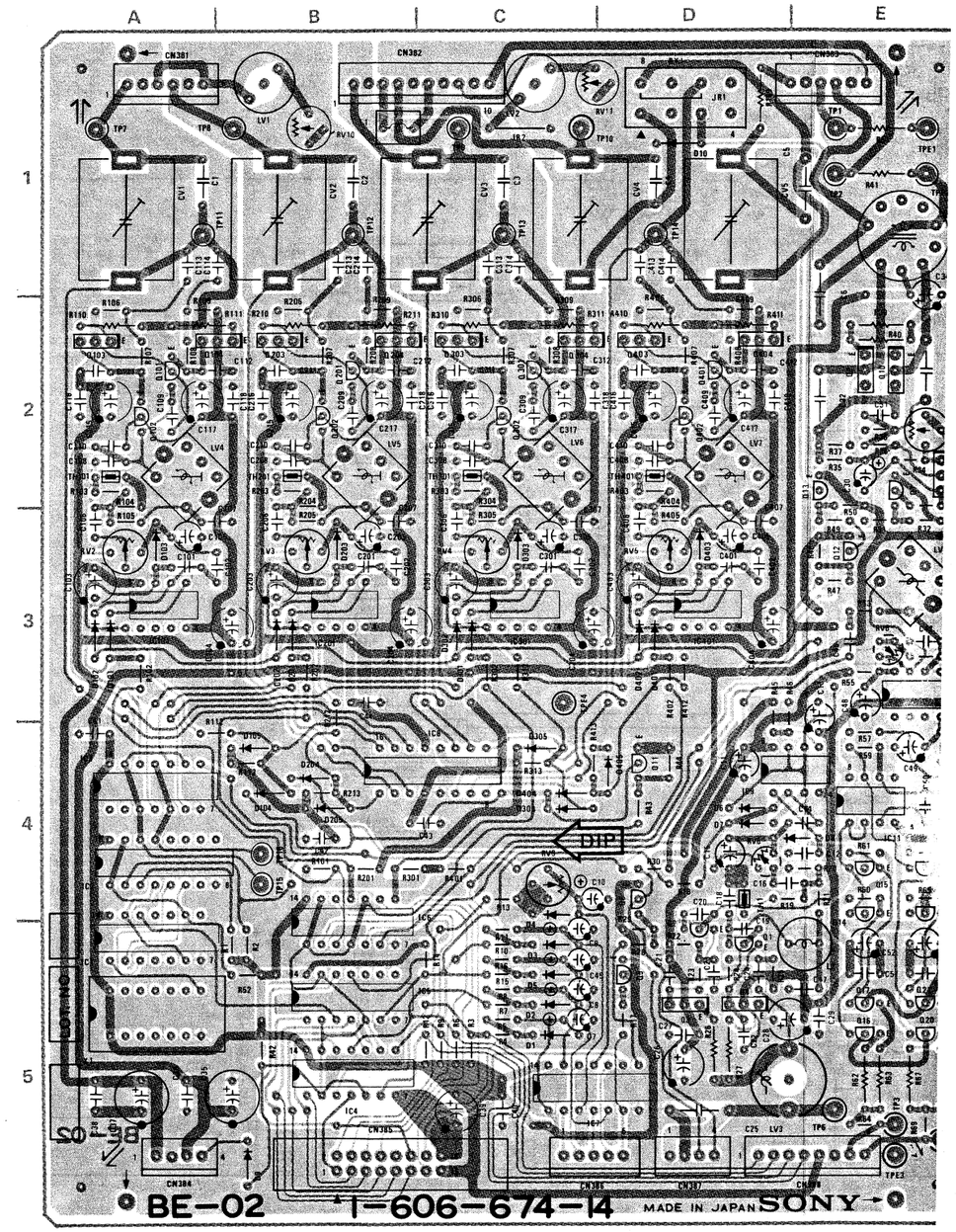

■ 1-606-674-14
COMPONENT SIDE

■ 1-606-674-
SOLDER S

BE-02 BOARD (1-606-674-14)

Component Side

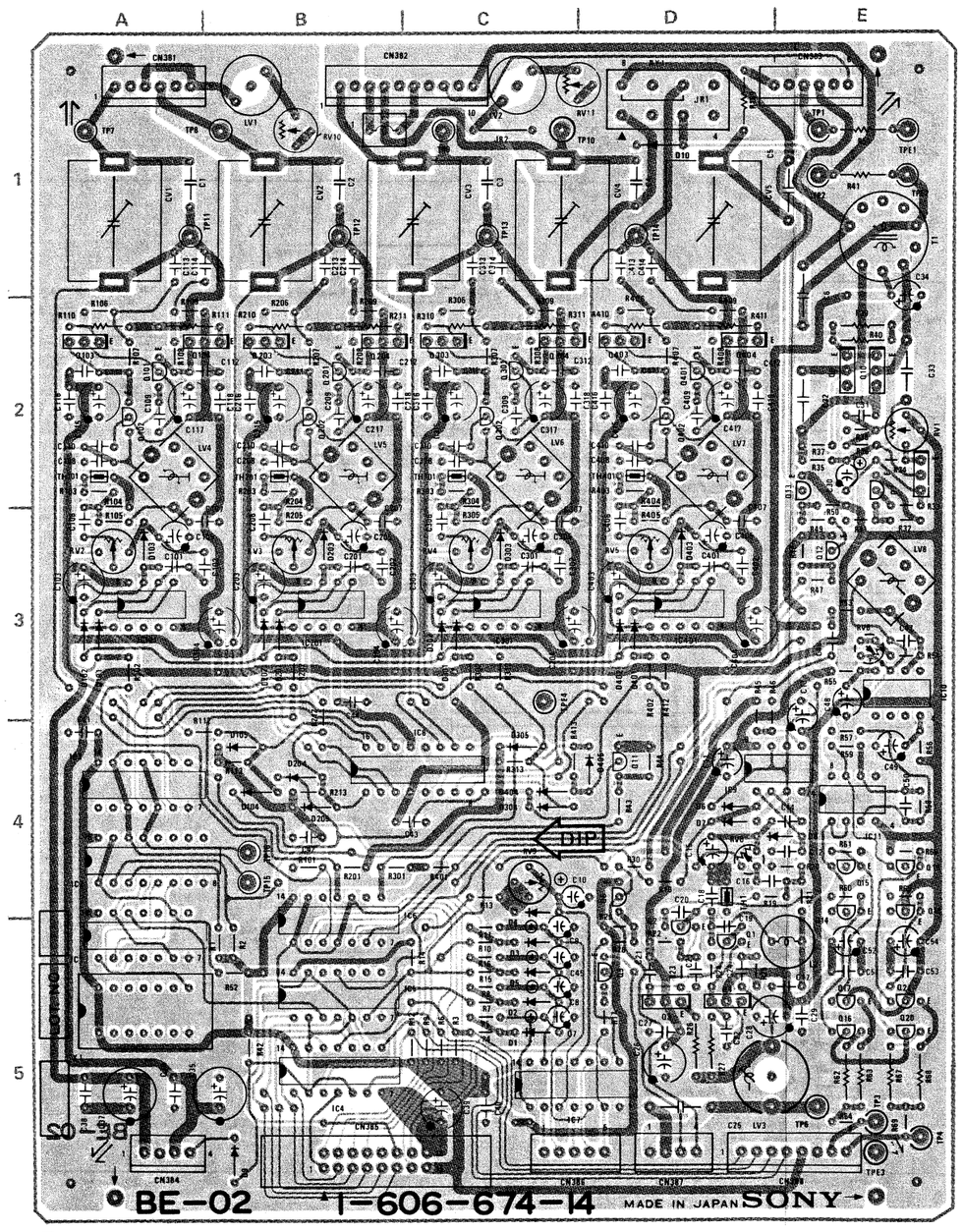

■ 1-606-674-14
COMPONENT SIDE

■ 1-606-674-14
SOLDER SIDE

BE-02 (1-606-674-14 & UP)

BVH-2000(J,U/C)
BVH-2000PS
BVH-2000PM
BVH-2500(J,U/C)

CN381M		Q6	4D
	1A	Q7	2E
CN382M		Q8	2E
	1C	Q9	2E
CN383M		Q10	2E
	1E	Q11	4D
CN384M			
	5A	(PS 04 MODEL)	
CN385M		Q12	3E
	5B	Q13	2E
CN386M			
	5D	Q14	4E
CN387M		Q15	4E
	5D	Q16	5E
CN388M		Q17	5E
	5E	Q18	4E
		Q19	4E
CV1	1A	Q20	5E
CV2	1B	Q21	5E
CV3	1C	Q101	2A
		Q102	2A
(PS 04 MODEL)		Q103	2A
CV4	1C	Q104	2B
		Q201	2B
CV5	1D	Q202	2B
		Q203	2B
D1	5C	Q204	2B
D2	5C	Q301	2C
D3	5C	Q302	2C
D4	4C	Q303	2C
D5	5C	Q304	2C
D6	4D	Q401	2D
D7	4D	Q402	2D
D8	4E	Q403	2D
D9	5B	Q404	2D
D10	1D		
D101	3A	RV1	2E
D102	3A	RV2	3A
D103	3A	RV3	3B
D104	4B	RV4	3C
D105	4B	RV5	3D
D201	3B	RV6	4D
D202	3B	RV8	3E
D203	3B	RV9	4C
D204	4B	RV10	1B
D205	4B		
D301	3C	(PS 04 MODEL)	
D302	3C	RV11	1D
D303	3C		
D304	4C	(PS 04 MODEL)	
D305	4C	RY1	1D
D401	3D		
D402	3D	TH101	2A
D403	3D	TH201	2B
D404	4C	TH301	2C
D405	4D	TH401	2D
IC1	5A	TP1	1E
IC2	4A	TP2	1E
IC3	4A	TP3	5E
IC4	5B	TP4	5E
IC5	5B	TP6	5E
IC6	4B	TP7	1A
IC7	5D	TP8	1B
IC8	4C	TP9	1C
IC9	4D		
IC10	3E	(PS 04 MODEL)	
IC11	4E	TP10	1C
IC101	3A		
IC201	3B	TP11	1A
IC301	3C	TP12	1B
IC401	3D	TP13	1C
		TP14	1D
		TP15	4B
LV1	1B	TP16	4B
(PS 04 MODEL)			
LV2	1C	TPE1	1E
		TPE2	1E
LV3	5D	TPE3	5E
LV4	2A	TPE4	3C
LV5	2B		
LV6	2C	X1	5A
LV7	2D		
LV8	3E		
Q1	5D		
Q2	5D		
Q3	5D		
Q4	5D		
Q5	5D		

BE-02 BOARD

Audio Bias/Erase Oscillator

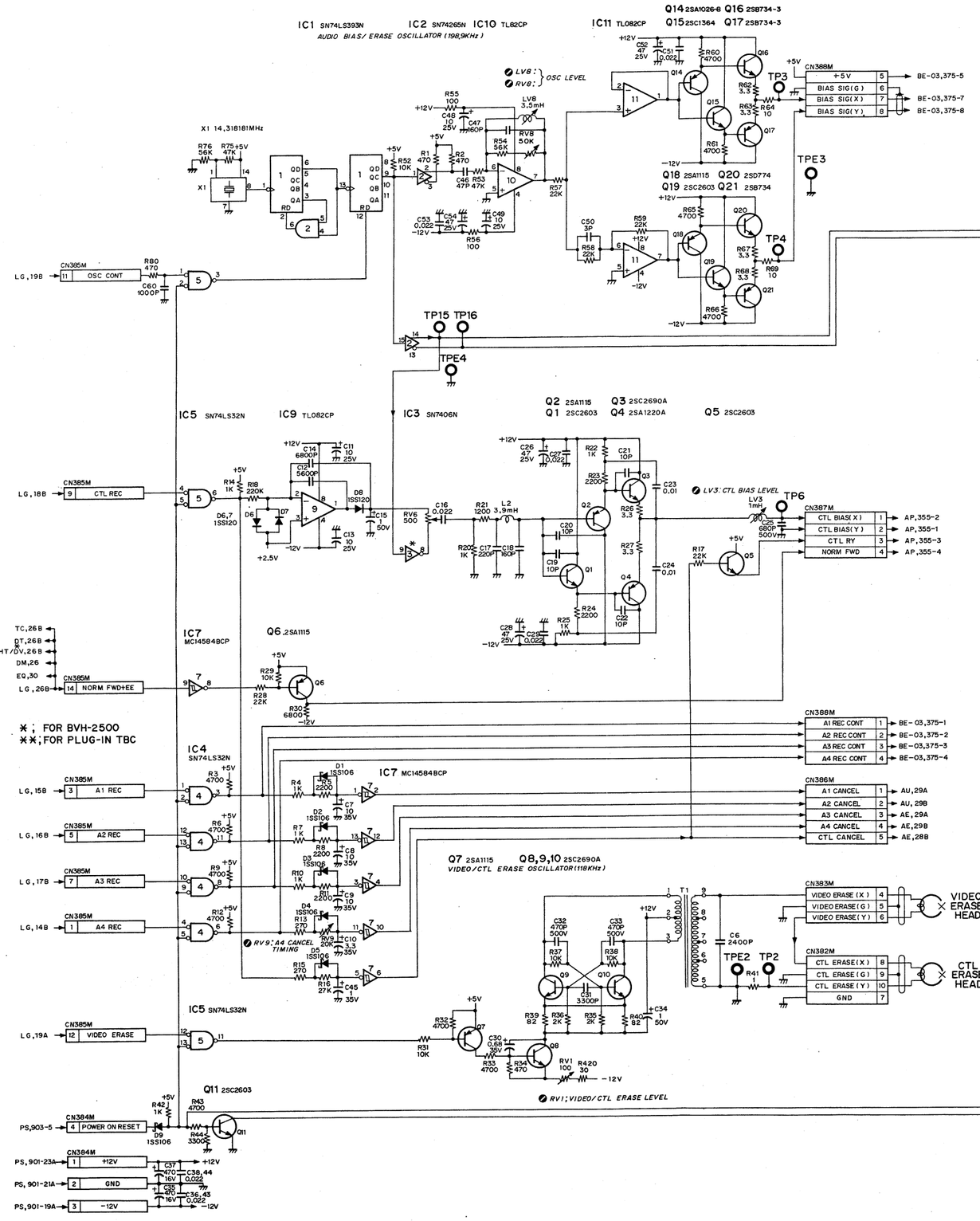

C-127(5/7)

C-127(6/7)

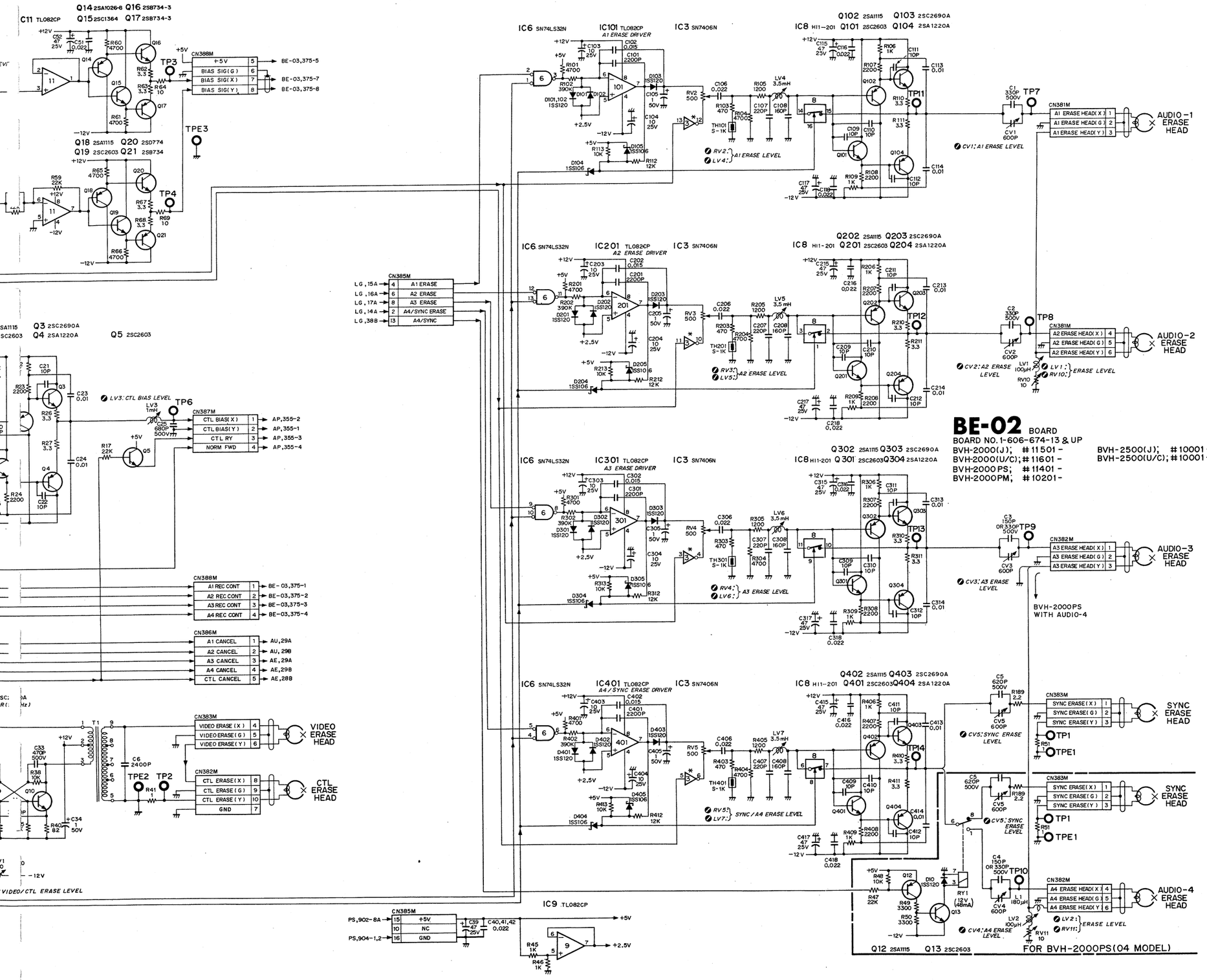

BE-02 BOARD

BOARD NO.1-606-674-13 & UP

BVH-2000(J); #11501 -
BVH-2000(U/C); #11601 -
BVH-2000PS; #11401 -
BVH-2000PM; #10201 -
BVH-2500(J); #10001 -
BVH-2500(U/C); #10001 -

BE-03, BE-04 TAPE TRANSPORT

BE-03; 1-606-675-11
BE-04; 1-606-676-12

BE-03 BOARD (1-606-675-11)

Component Side

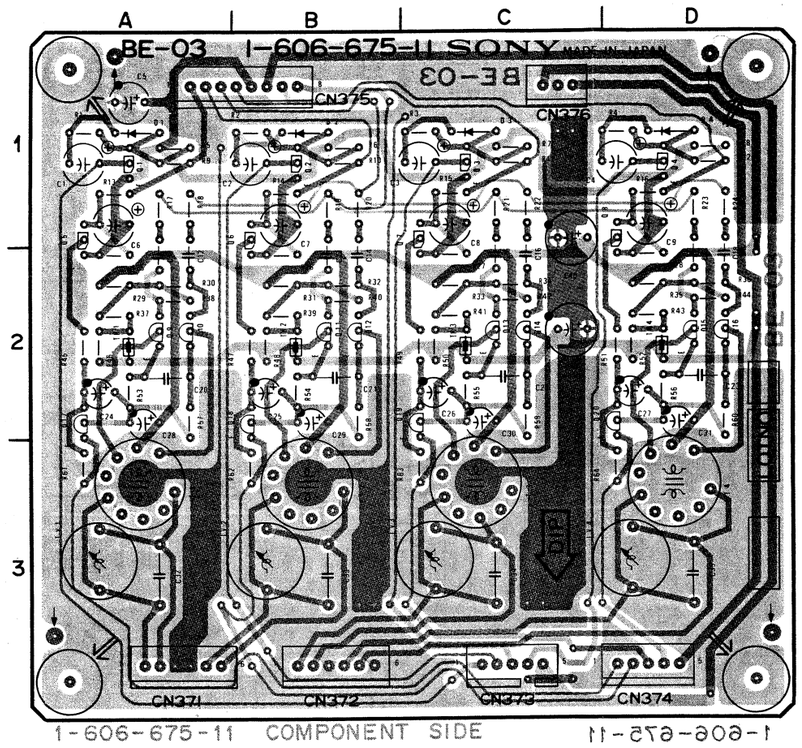

BE-03 (1-606-675-11)

BVH-2000(J,U/C)
BVH-2000PS
BVH-2000PM

CN371M
3A
CN372M
3B
CN373M
3C
CN374M
3D
CN375M
1B
CN376M
1C

D1 1A
D2 1B
D3 1C

(PS 04 MODEL)
D4 1D

LV1 3A
LV2 3B
LV3 3C

(PS 04 MODEL)
LV4 3D

Q1 1A
Q2 1B
Q3 1C

(PS 04 MODEL)
Q4 1D

Q5 1A
Q6 1B
Q7 1C

(PS 04 MODEL)
Q8 1D

Q9 2A
Q10 2A
Q11 2B
Q12 2B
Q13 2C
Q14 2C

(PS 04 MODEL)
Q15 2D
Q16 2D

Q17 2A
Q18 2B
Q19 2C

(PS 04 MODEL)
Q20 2D

TH1 2A
TH2 2B
TH3 2C

(PS 04 MODEL)
TH4 2D

BE-04 BOARD (1-606-676-12)

Component Side

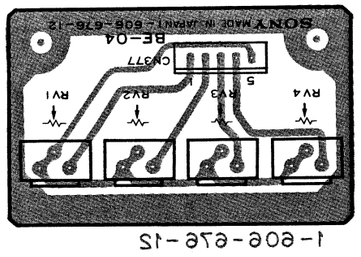

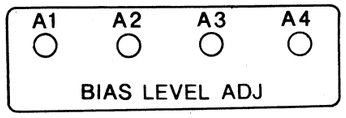

BE-03/BE-04 BOARD

Audio Bias Amplifier
Audio Bias Level Adj.

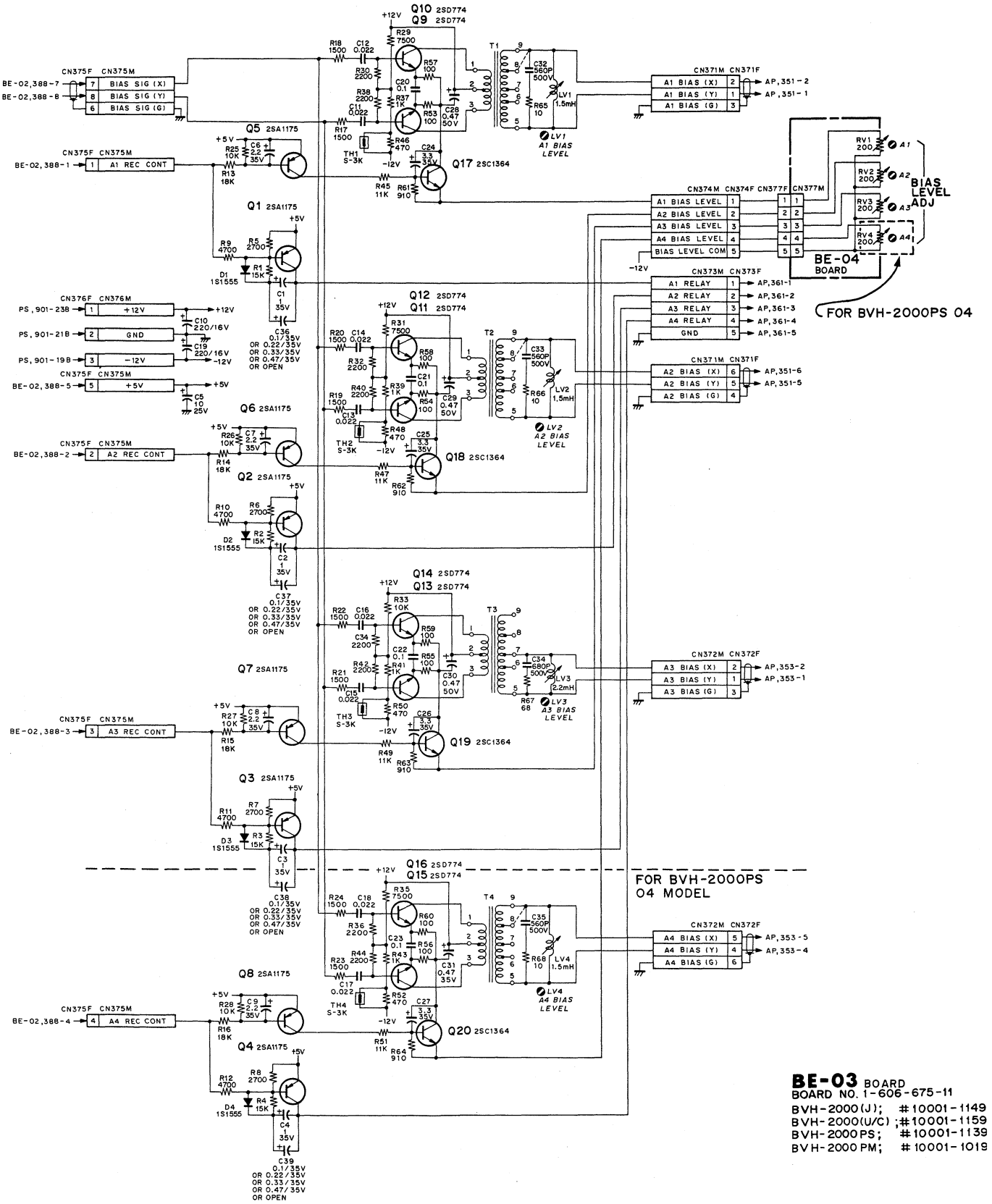

BE-03 BOARD
BOARD NO. 1-606-675-11
BVH-2000(J); #10001-1149
BVH-2000(U/C); #10001-1159
BVH-2000PS; #10001-1139
BVH-2000PM; #10001-1019

BE-03 BOARD (1-606-675-12)

Component Side

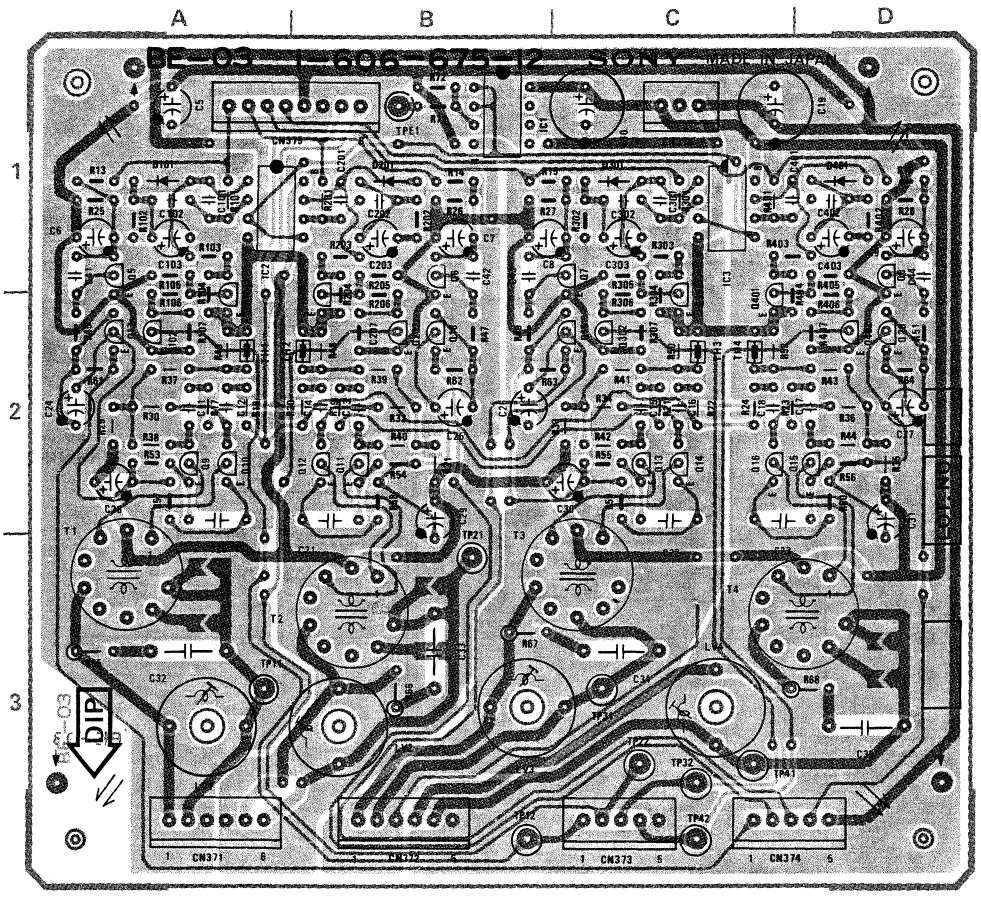

■ 1-606-675-12 COMPONENT SIDE ■ 1-606-675-12

BE-03 (1-606-675-12 & UP)

BVH-2000(J,U/C)
BVH-2000PS
BVH-2000PM
BVH-2500(J,U/C)

CN371M		Q17	2A
	3A	Q18	2B
CN372M		Q19	2C
	3B		
CN373M		(PS 04 MODEL)	
	3C	Q20	2D
CN374M			
	3D	Q101	1A
CN375M		Q102	2A
	1A	Q201	1B
CN376M		Q202	2B
	1C	Q301	1C
		Q302	2C
D101	1A		
D201	1B	(PS 04 MODEL)	
D301	1C	Q401	1D
		Q402	2D
(PS 04 MODEL)			
D401	1D	TH1	2A
		TH2	2B
IC1	1C	TH3	2C
IC2	1A		
IC3	1C	(PS 04 MODEL)	
		TH4	3D
LV1	3A		
LV2	3B	TP11	3A
LV3	3C	TP12	3C
		TP21	3B
(PS 04 MODEL)		TP22	3C
LV4	3C	TP31	3C
		TP32	3C
Q5	1A		
Q6	1B	(PS 04 MODEL)	
Q7	1C	TP41	3D
		TP42	3C
(PS 04 MODEL)			
Q8	1D	TPE1	1B
Q9	2A		
Q10	2A		
Q11	2B		
Q12	2B		
Q13	2C		
Q14	2C		
(PS 04 MODEL)			
Q15	2D		
Q16	2D		

BE-04 BOARD (1-606-676-12)

Component Side

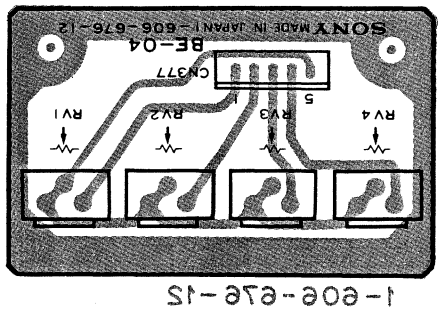

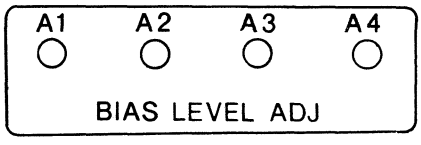

BE-03/BE-04 BOARD

Audio Bias Amplifier
Audio Bias Level Adj.

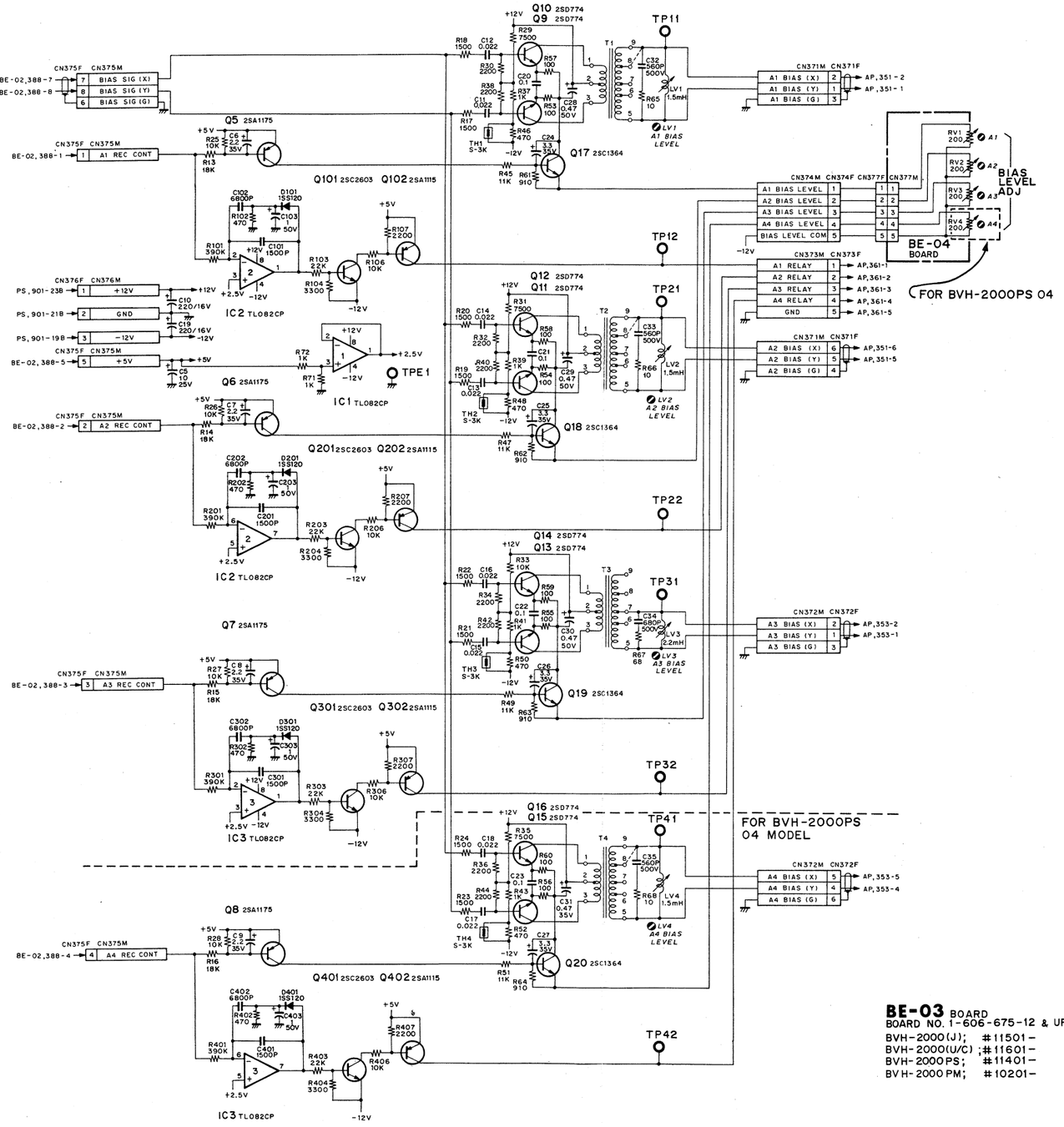

BE-03 BOARD
BOARD NO. 1-606-675-12 & UP

BVH-2000(J); #11501-
BVH-2000(U/C); #11601-
BVH-2000PS; #11401-
BVH-2000PM; #10201-
BVH-2500(J); #10001-
BVH-2500(U/C); #10001-

HEAD DRUM (FOR 02/04) DR-13/14/15, SL-07/08/09 TAPE TRANSPORT

DR-13 BOARD (1-606-663-11)
Component Side

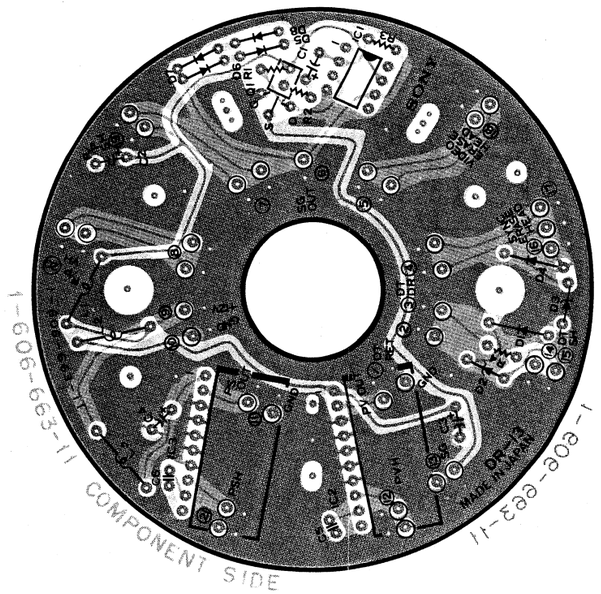

DR-14 BOARD (1-606-664-12)
Solder Side

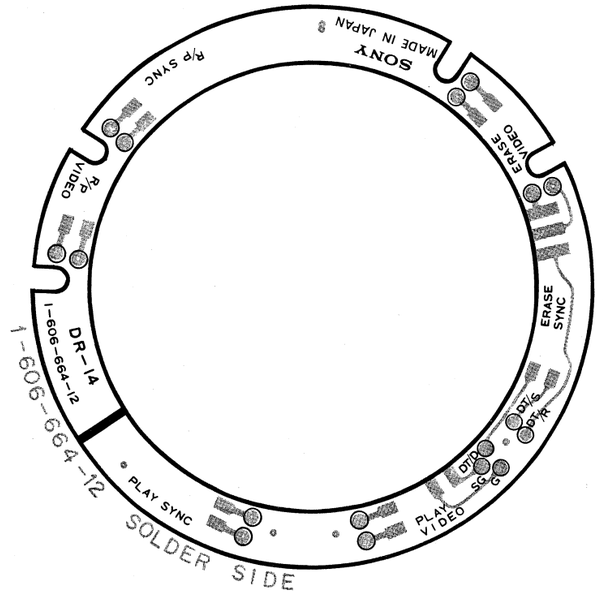

SL-07 BOARD (1-606-667-12)
Component Side

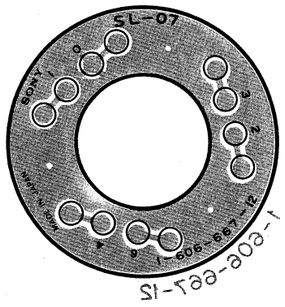

SL-08 BOARD (1-606-668-11)
Solder Side

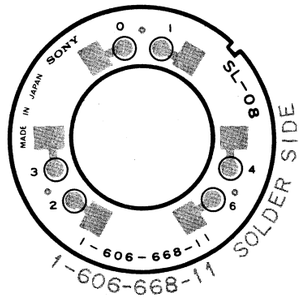

SL-09 BOARD (1-606-669-14)
Component Side

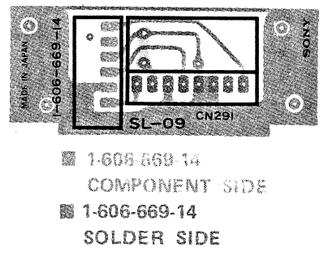

DR-15 BOARD (1-606-665-12)
Solder Side

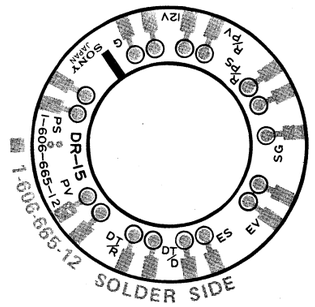

HEAD DRUM **(FOR 02/04)** DR-13/14/15, SL-07/08/09 TAPE TRANSPORT

HEAD DRUM ; FOR 02/04 MODEL

DR-13 BOARD: Video/Sync PB Amplifier
DR-14 BOARD: Rotary Head Relaying
DR-15 BOARD: Rotary Head Relaying
DR-16 BOARD: Rotary Head Relaying
SL-07 BOARD: Slip Ring Relaying
SL-08 BOARD: Slip Ring Relaying
SL-09 BOARD: Slip Ring Relaying

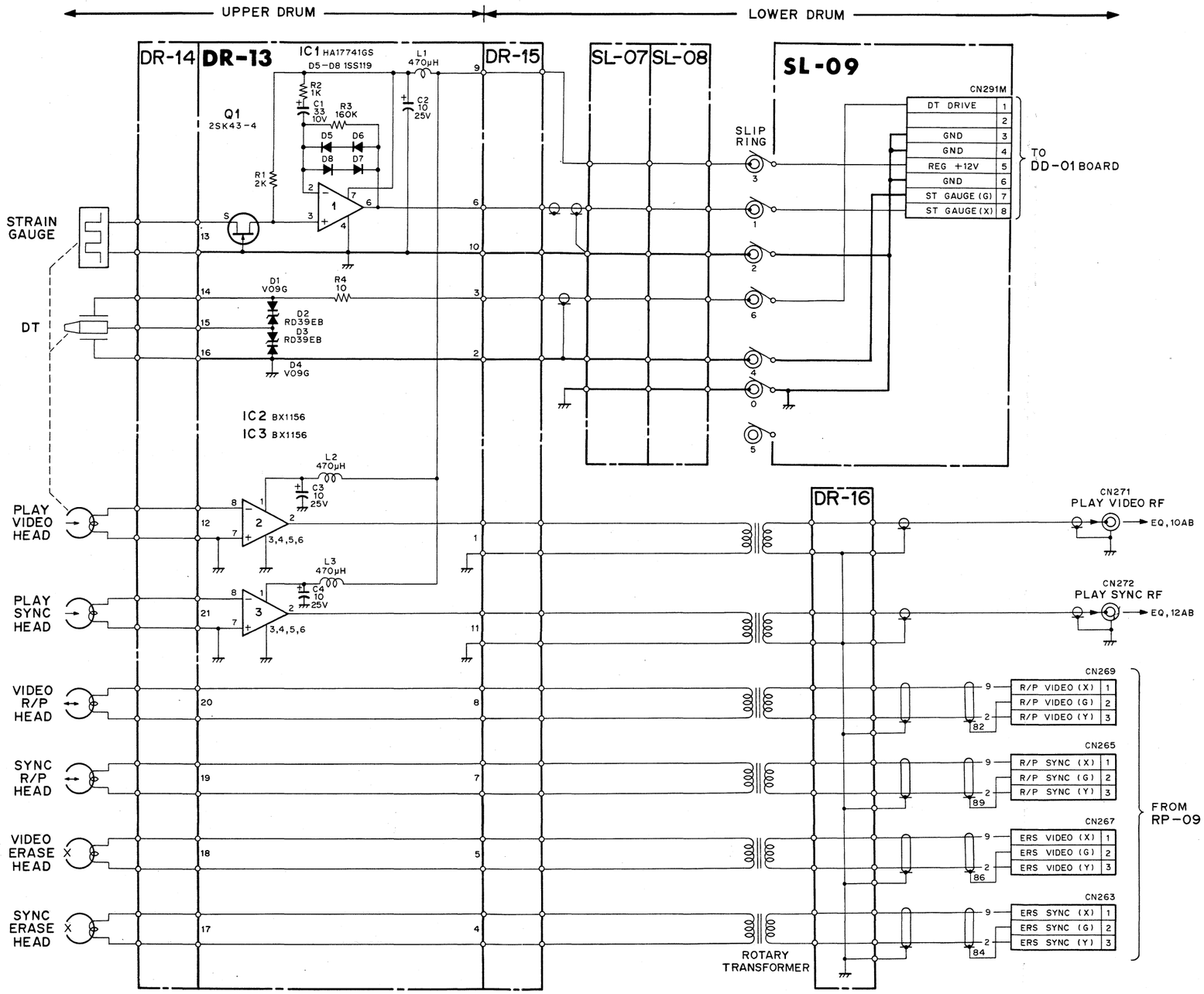

HEAD DRUM ASSY; DMH-17A-R(FOR NTSC,PM 02 MODEL)
DMH-18A-R(FOR PS 02/04 MODEL)
UPPER DRUM ASSY; DMR-17-R(FOR NTSC,PM 02 MODEL)
DMR-18-R(FOR PS 02/04 MODEL)
LOWER DRUM ASSY; DML-17A-R

HEAD DRUM (FOR 02/04)

BVH-2000(J); #10001-
BVH-2000(U/C); #10001-
BVH-2000PS; #10001-
BVH-2000PM; #10001-

HEAD DRUM (FOR 00) DR-14/15/20 TAPE TRANSPORT

DR-14 BOARD (1-606-664-12)
Solder Side

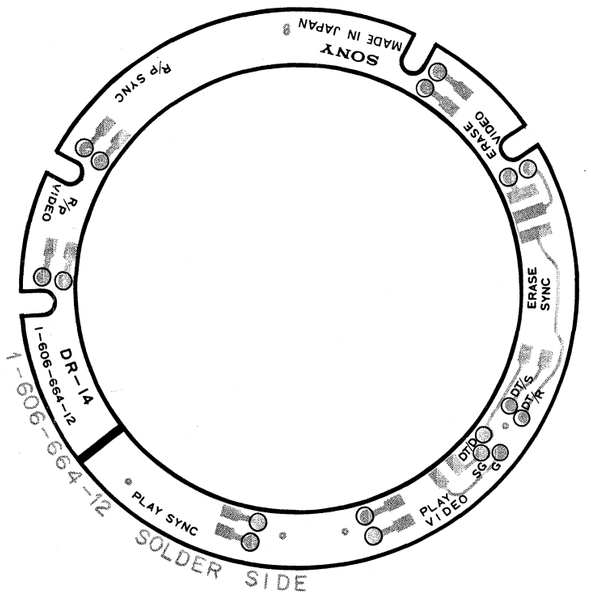

DR-15 BOARD (1-606-665-12)
Solder Side

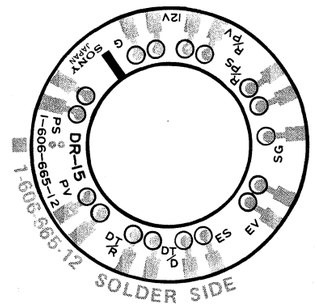

DR-20 BOARD (1-608-099-11)
Component Side

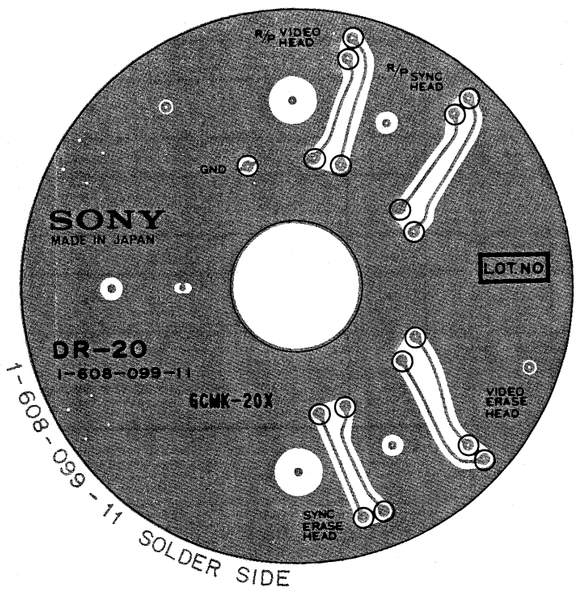

HEAD DRUM (FOR 00) DR-14/15/20 TAPE TRANSPORT

HEAD DRUM; FOR 00 MODEL

DR-14 BOARD: Rotary Head Relaying
DR-15 BOARD: Rotary Head Relaying
DR-20 BOARD: Rotary Head Relaying

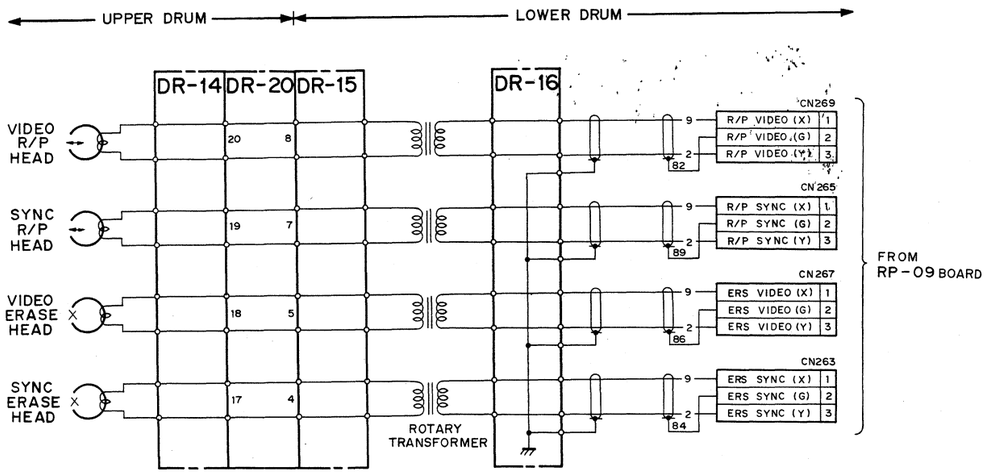

HEAD DRUM ASSY;	DMH-19A-R(FOR NTSC,PM 00 MODEL) DMH-20A-R(FOR PS,00 MODEL)
UPPER DRUM ASSY;	DMR-19-R (FOR NTSC,PM 00 MODEL) DMR-20-R (FOR PS 00 MODEL)
LOWER DRUM ASSY;	DML-19A-R

HEAD DRUM (FOR 00 MODEL)

BVH-2000(J); #10001-
BVH-2000(U/C); #10001-
BVH-2000PS; #10001-

RP-09 TAPE TRANSPORT

RP-09 BOARD (1-606-662-12)

Component Side

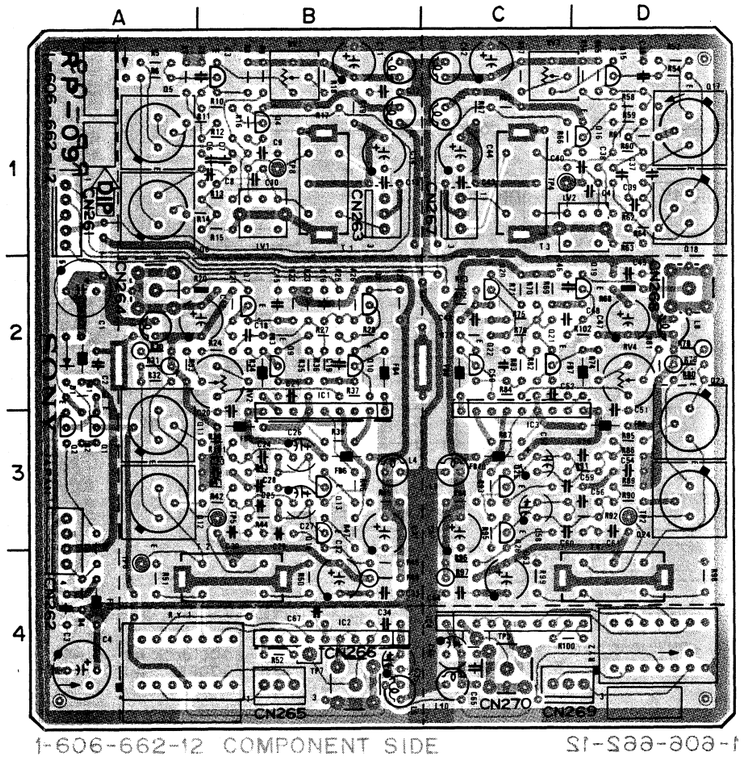

RP-09 (1-606-662-12 & UP)

BVH-2000(J,U/C)
BVH-2000PS
BVH-2000PM
BVH-2500(J,U/C)

CN261M	1A	RV1	1B
CN262M	3A	RV2	2B
CN263M	1B	RV3	1C
CN264M	2A	RV4	2D
CN265M	4B	RY1	4A
CN266M	4B	RY2	4D
CN267M	1C	TP2	3D
CN268M	2D	TP3	4C
CN269M	4C	TP4	1C
CN270M	4C	TP5	3B
D1	2A	TP6	4A
D2	2C	TP7	4B
IC1	2B	TP8	1B
IC2	4B		
IC3	2C		
IC4	4C		
LV1	1B		
LV2	1D		
Q1	3A		
Q2	3A		
Q3	1B		
Q4	1B		
Q5	1A		
Q6	1A		
Q7	2B		
Q8	2B		
Q9	2B		
Q10	2B		
Q11	3A		
Q12	3A		
Q13	3B		
Q14	3B		
Q15	1D		
Q16	1D		
Q17	1D		
Q18	1D		
Q19	2D		
Q20	2C		
Q21	2C		
Q22	2C		
Q23	3D		
Q24	3D		
Q25	3C		
Q26	3C		

RP-09 BOARD

Video/Sync R/P Amplifier (For R/P Head)

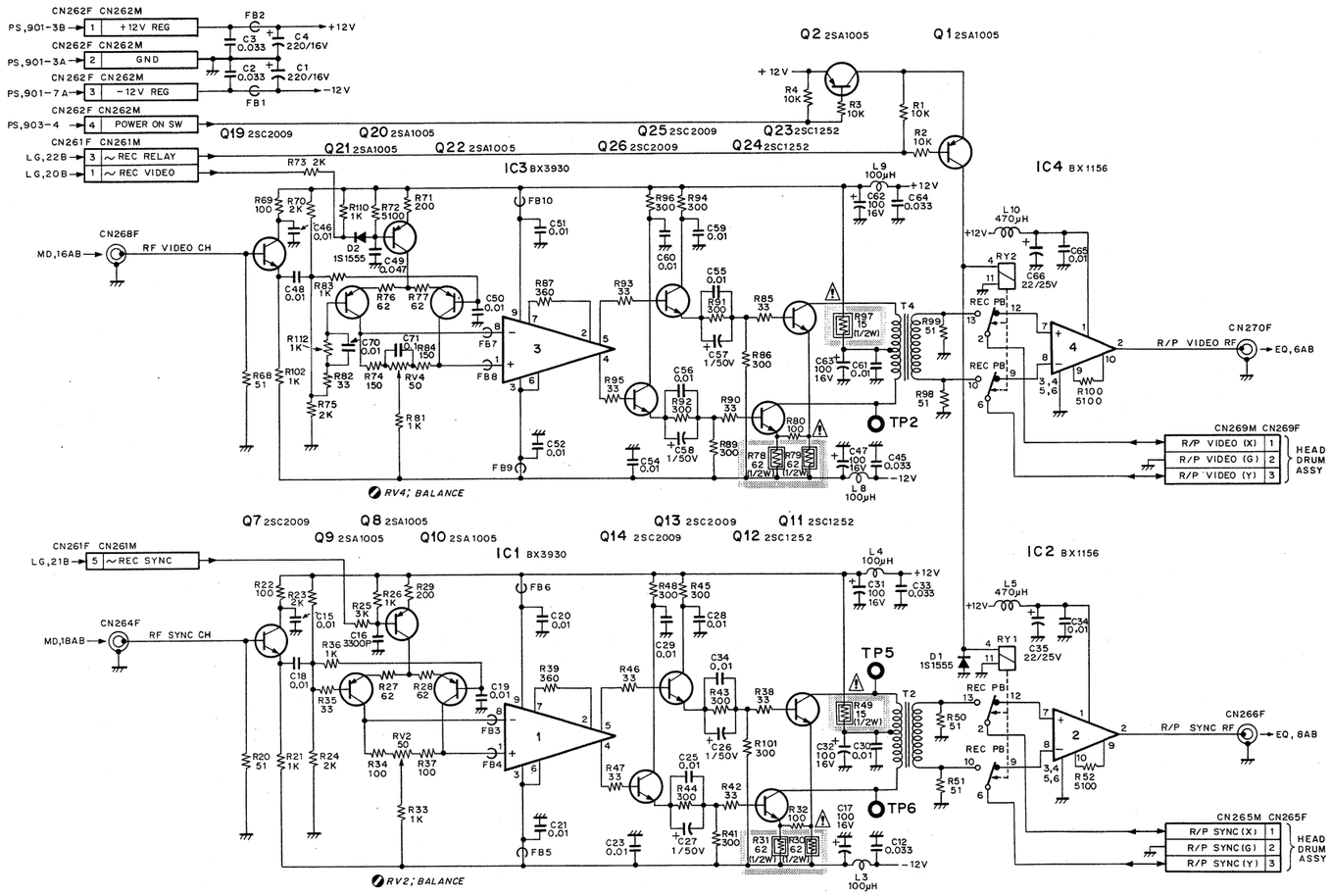

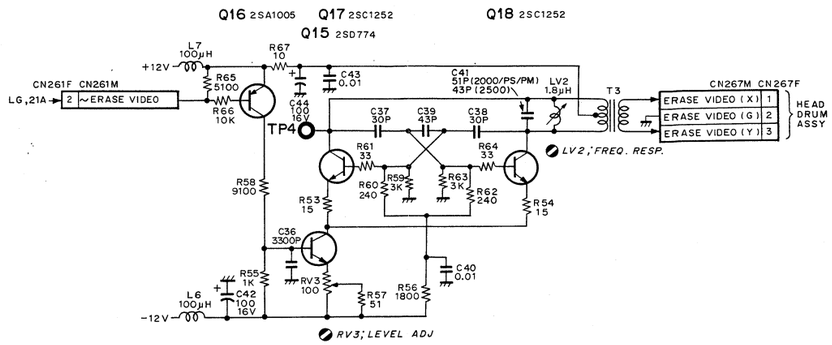

RP-09 BOARD
BOARD NO. 1-606-662-11 & UP
BVH-2000 (J); # 10001 —
BVH-2000 (U/C); # 10001 —
BVH-2000 PS; # 10001 —
BVH-2000 PM; # 10001 —
BVH-2500 (J); # 10001 —
BVH-2500 (U/C); # 10001 —

DD-01 (FOR 02/04) TAPE TRANSPORT

DD-01 BOARD (1-606-719-11) ; FOR 02/04 MODEL

Component Side

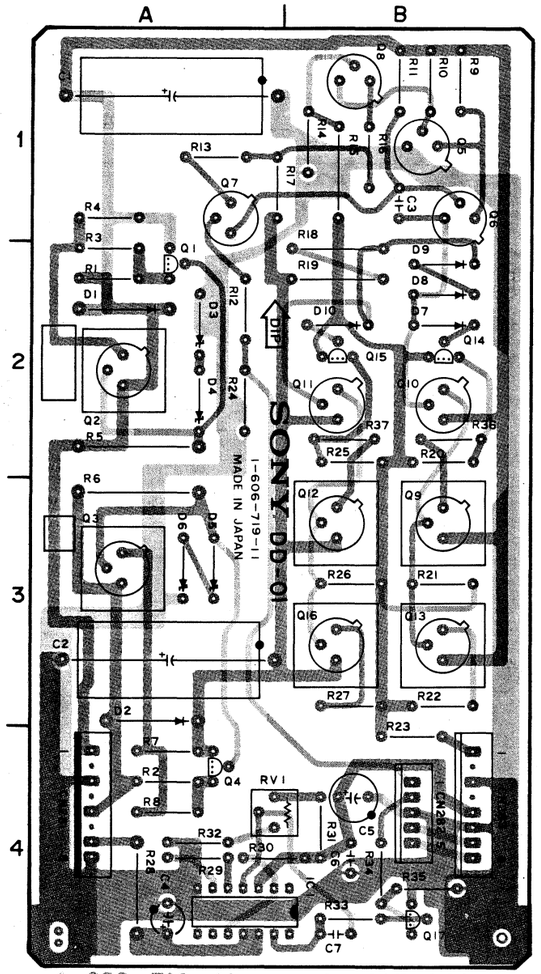

DD-01 (1-606-719-11 & UP)

BVH-2000(J,U/C)
(02 MODEL)

BVH-2000PS
(02/04 MODEL)

BVH-2000PM
BVH-2500(J,U/C)

CN281M 4A
CN282M 4B
CN283M 4B

D1 2A
D2 3A
D3 2A
D4 2A
D5 3A
D6 3A
D7 2B
D8 2B
D9 2B
D10 2B

IC1 4A

Q1 2A
Q2 2A
Q3 3A
Q4 4A
Q5 1B
Q6 1B
Q7 1A
Q8 1B
Q9 3B
Q10 2B
Q11 2B
Q12 3B
Q13 3B
Q14 2B
Q15 2B
Q16 3B
Q17 4B

RV1 4A

1-606-719-11
COMPONENT SIDE

DD-01 BOARD; FOR 02/04 MODEL

DT Driver

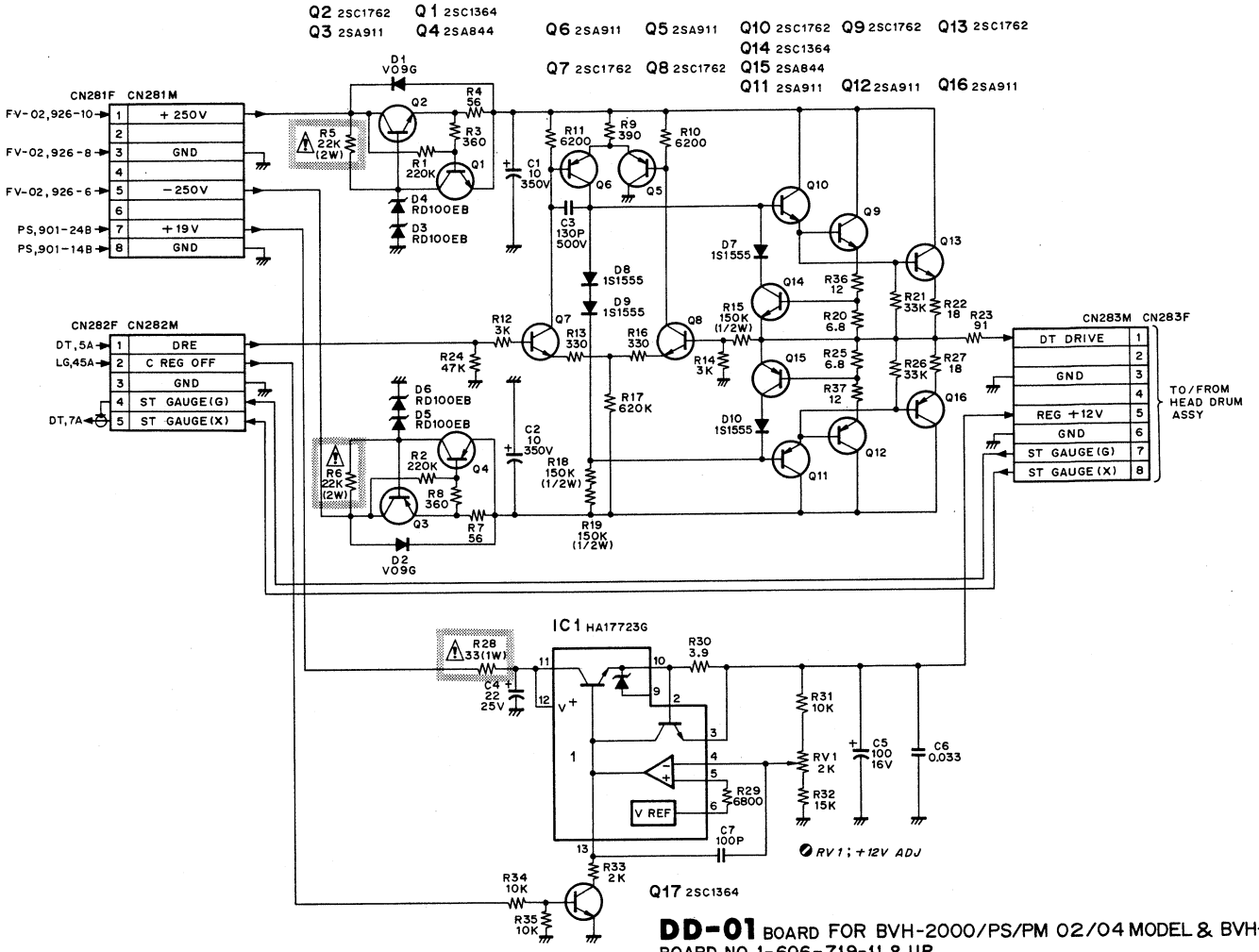

DD-01 BOARD FOR BVH-2000/PS/PM 02/04 MODEL & BVH-2500
BOARD NO. 1-606-719-11 & UP

BVH-2000(J); #10001-
BVH-2000(U/C); #10001-
BVH-2000PS; #10001-
BVH-2000PM; #10001-

BVH-2500(J); #10001-
BVH-2500(U/C); #10001-

DA-07 BOARD (1-606-696-12)

Component Side

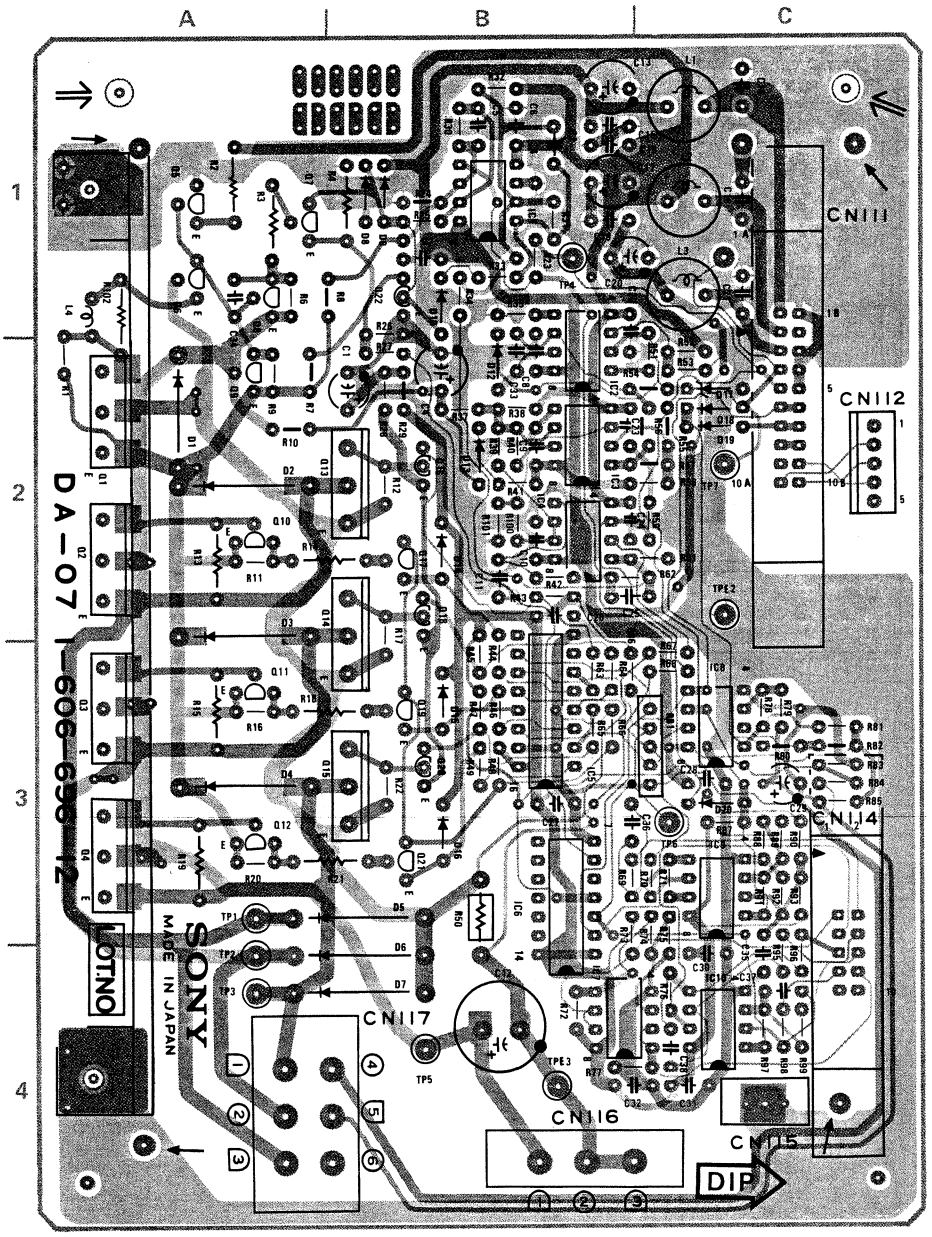

■ 1-606-696-12
COMPONENT SIDE

■ 1-606-696-12
SOLDER SIDE

DA-07 (1-606-696-12 & UP)

BVH-2000(J,U/C)
BVH-2000PS
BVH-2000PM
BVH-2500(J,U/C)

CN111M		TP4	1B
	2C	TP5	4B
CN112M		TP6	3C
	2C	TP7	2C
CN114M			
	4C	TPE2	2C
CN115M		TPE3	4B
	4C		
CN116M			
	4B		
CN117M			
	4A		

D1	2A
D2	2A
D3	3A
D4	3A
D5	3B
D6	4B
D7	4B
D8	1B
D9	1B
D10	1B
D12	2B
D13	2B
D14	2B
D15	3B
D16	3B
D17	2C
D18	2C
D19	2C
D20	3C

IC1	1B
IC2	2B
IC3	2B
IC4	2B
IC5	3B
IC6	3B
IC7	4B
IC8	3C
IC9	3C
IC10	4C

Q1	2A
Q2	2A
Q3	3A
Q4	3A
Q5	1A
Q6	1A
Q7	1A
Q8	1A
Q9	2A
Q10	2A
Q11	3A
Q12	3A
Q13	2B
Q14	3B
Q15	3B
Q16	2B
Q17	2B
Q18	2B
Q19	3B
Q20	3B
Q21	3B
Q22	1B

RB1	3C

DA-07 BOARD

Drum Motor Driver

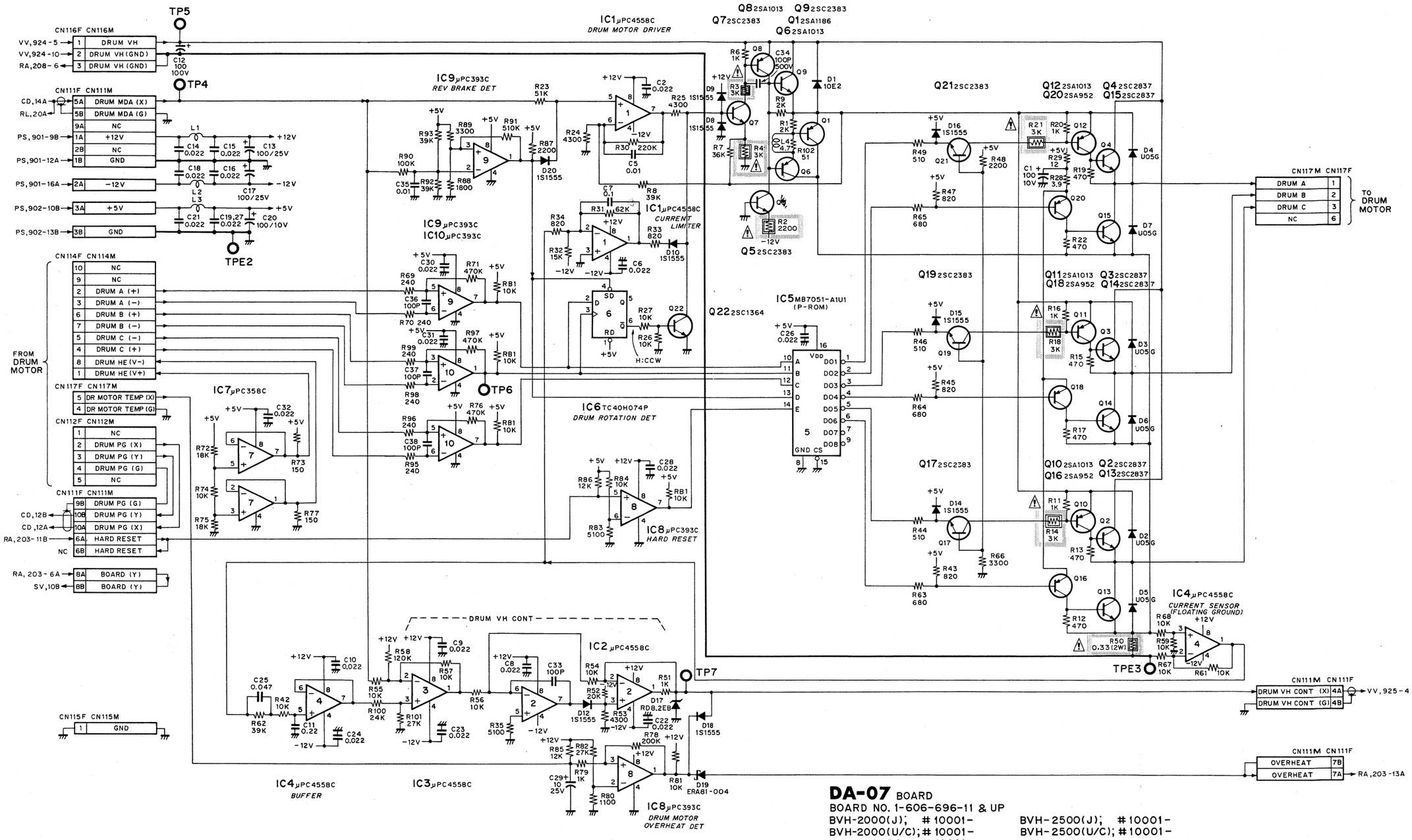

DA-07 BOARD

BOARD NO. 1-606-696-11 & UP

BVH-2000(J); # 10001-
BVH-2000(U/C); # 10001-
BVH-2000PS; # 10001-
BVH-2000PM; # 10001-

BVH-2500(J); # 10001-
BVH-2500(U/C); # 10001-

CA-09 **BOARD (1-606-695-11)**
Component Side

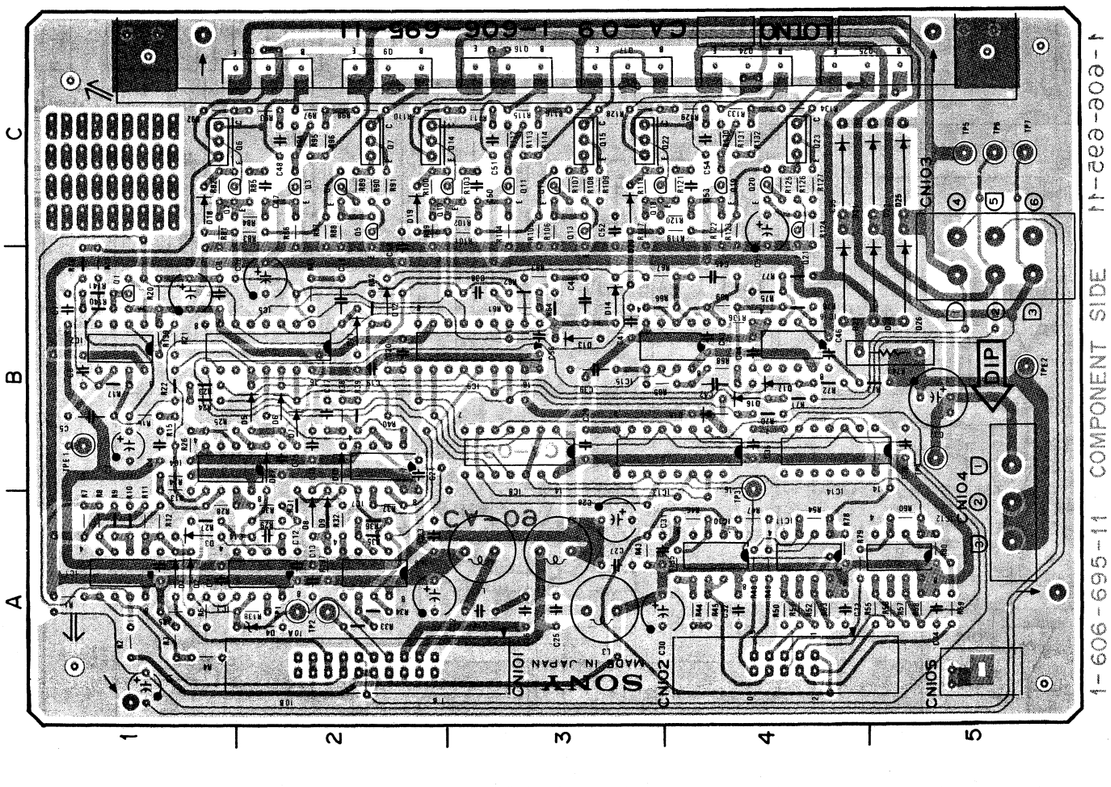

CA-09 (1-606-695-11 & UP)		
BVH-2000(J,U/C)	TP1	2A
BVH-2000PS	TP2	2A
BVH-2000PM	TP3	4A
BVH-2500(J,U/C)	TP4	5B
	TP5	5C
	TP6	5C
	TP7	5C
CN101M	2A	
CN102M	4A	
CN103M	5B	
CN104M	5A	
CN105M	5A	
D1	1A	
D2	1A	
D3	1A	
D4	2A	
D5	2B	
D6	2B	
D7	2B	
D8	2A	
D9	2A	
D10	2B	
D11	2B	
D12	2B	
D13	3B	
D14	3B	
D15	4B	
D16	4B	
D17	4B	
D18	1C	
D19	2C	
D20	3C	
D21	4C	
D22	4B	
D23	5C	
D24	5B	
D25	5C	
D26	3B	
IC1	1A	
IC2	1B	
IC3	2A	
IC4	1B	
IC5	2B	
IC6	2A	
IC7	2A	
IC8	3B	
IC9	3A	
IC10	4A	
IC11	4A	
IC12	5A	
IC13	3B	
IC14	4B	
IC15	3B	
IC16	4B	
Q1	1B	
Q2	2C	
Q3	2C	
Q4	2C	
Q5	2C	
Q6	2C	
Q7	2C	
Q8	2C	
Q9	2C	
Q10	3C	
Q11	3C	
Q12	3C	
Q13	3C	
Q14	3C	
Q15	3C	
Q16	3C	
Q17	3C	
Q18	3C	
Q19	4C	
Q20	4C	
Q21	4C	
Q22	3C	
Q23	4C	
Q24	4C	
Q25	4C	

CA-09 BOARD

Capstan Motor Driver

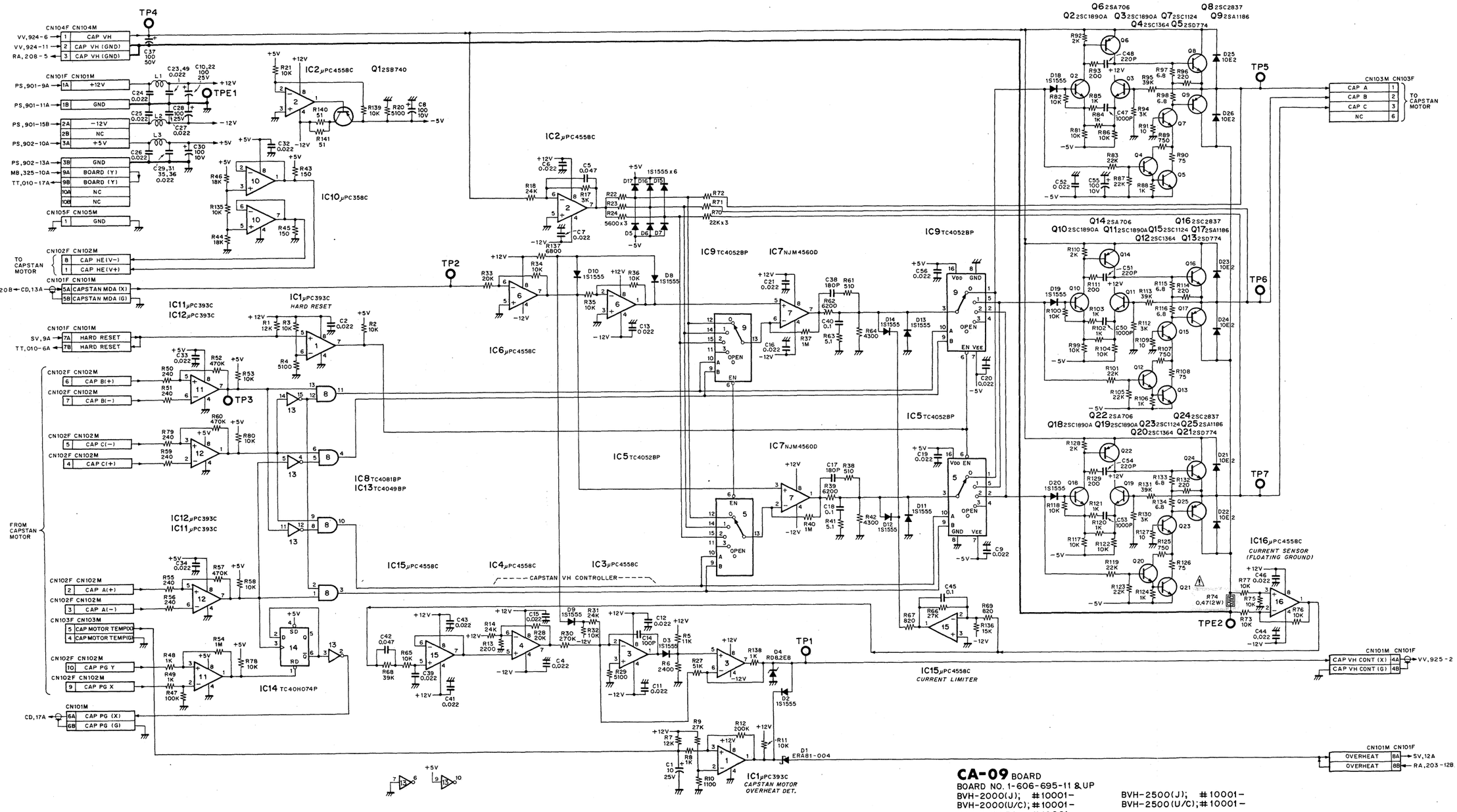

CA-09 BOARD

BOARD NO. 1-606-695-11 & UP

BVH-2000(J); #10001-
BVH-2000(U/C); #10001-
BVH-2000PS; #10001-
BVH-2000PM; #10001-
BVH-2500(J); #10001-
BVH-2500(U/C); #10001-

RA-05 BOARD (1-606-694-11)

Component Side

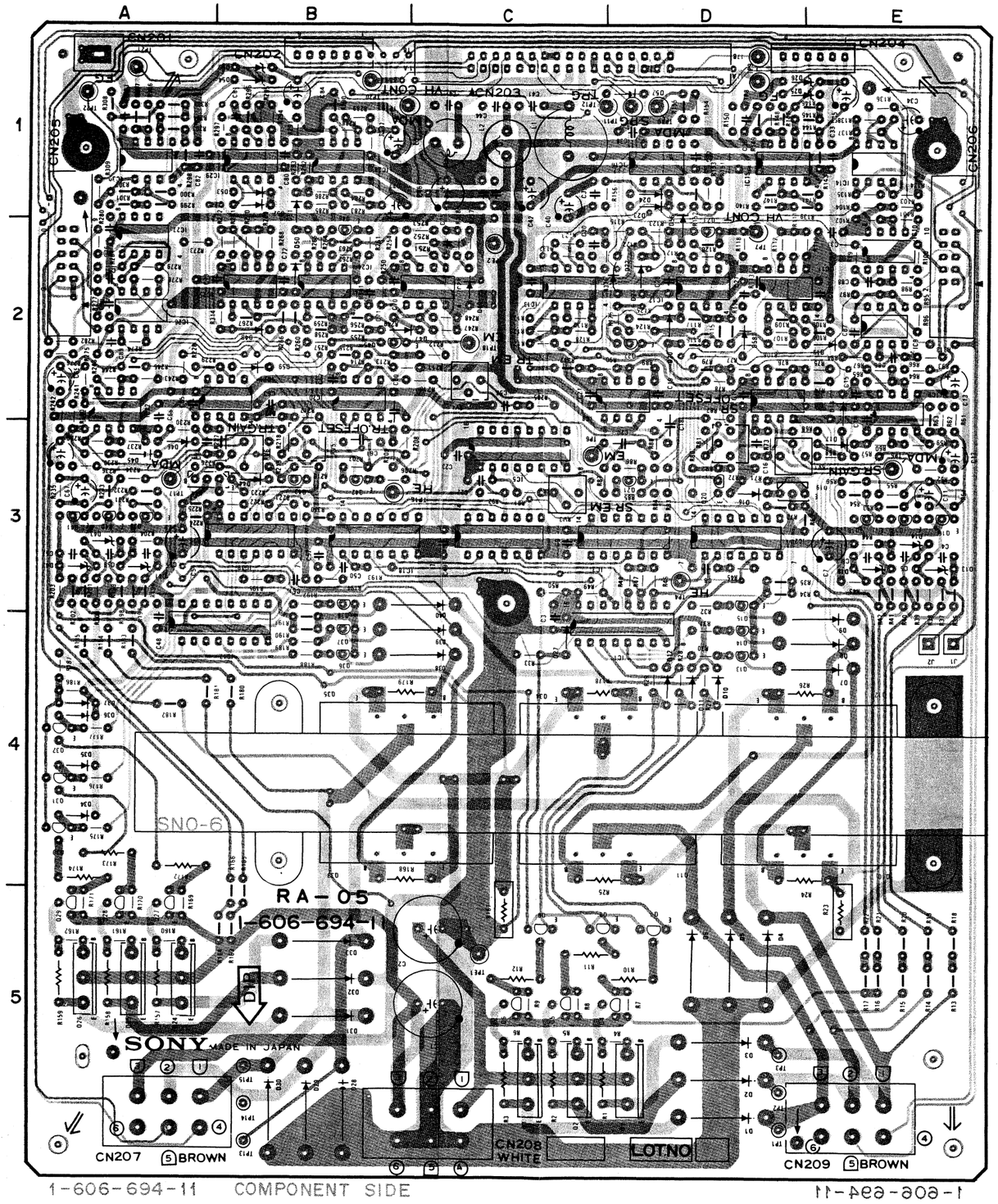

RA-05 (1-606-694-11)

BVH-2000(J,U/C)		Q1	5D		
BVH-2000PS		Q2	5C		
BVH-2000PM		Q3	5C		
		Q4	5D		
CN201M		Q5	5C		
	1A	Q6	5C		
CN202M		Q7	5D		
	1B	Q8	5C		
CN203M		Q9	5C		
	1C	Q10	4E		
CN204M		Q11	4D		
	1E	Q12	4E		
CN205M		Q13	4D		
	2A	Q14	4D		
CN206M		Q15	3D		
	2E	Q16	3E		
CN207M		Q17	3E		
	5A	Q18	3E		
CN208M		Q19	3D		
	5C	Q20	3D		
CN209M		Q21	3D		
	5E	Q22	2D		
		Q23	2D		
D1	5D	Q24	5A		
D2	5D	Q25	5A		
D3	5D	Q26	5A		
D4	5D	Q27	5A		
D5	5D	Q28	5A		
D6	5D	Q29	5A		
D7	4E	Q30	4A		
D8	4E	Q31	4A		
D9	4E	Q32	4A		
D10	4D	Q33	4B		
D11	4D	Q34	4D		
D12	4D	Q35	4B		
D13	3E	Q36	4B		
D14	3E	Q37	4B		
D15	3E	Q38	3B		
D16	3D	Q39	3A		
D17	3E	Q40	3A		
D18	2E	Q41	3A		
D20	2D	Q42	3B		
D21	2D	Q43	3B		
D22	2D	Q44	3A		
D23	1D	Q45	2B		
D24	1D	Q46	2B		
D25	1D				
D26	1D	RV1	3D		
D27	4C	RV2	3D		
D28	5B	RV3	3C		
D29	5B	RV4	2C		
D30	5B	RV5	3B		
D31	5B	RV6	3B		
D32	5B				
D33	5B	TP1	5D		
D34	4A	TP2	5D		
D35	4A	TP3	5D		
D36	4A	TP4	3D		
D37	4A	TP5	3E		
D38	4C	TP6	3C		
D39	4C	TP7	2D		
D40	3C	TP8	1D		
D41	3A	TP9	1D		
D42	3A	TP10	1D		
D43	3A	TP11	1D		
D44	3B	TP12	1D		
D45	3A	TP13	5B		
D46	3A	TP14	5B		
D47	2B	TP15	5B		
D49	2C	TP16	3B		
D50	2B	TP17	3A		
D51	1B	TP18	2C		
D52	1B	TP19	1B		
D53	1B	TP20	1B		
D54	1B	TP21	1A		
D55	1B	TP22	1A		
D56	1D				
D57	1D	TPE1	5C		
D58	2D	TPE2	2C		
D59	2B				
IC1	4D				
IC2	3D				
IC3	3D				
IC4	3C				
IC5	3C				
IC6	2E				
IC7	2D				
IC8	2D				
IC9	2E				
IC10	2E				
IC11	2D				
IC12	2D				
IC13	2C				
IC14	1E				
IC15	1D				
IC16	1D				
IC17	4B				
IC18	3B				
IC19	3B				
IC20	2B				
IC21	2B				
IC22	2A				
IC23	2C				
IC24	2B				
IC25	2B				
IC26	2A				
IC27	2A				
IC28	1B				
IC29	1B				
IC30	1A				

RA-05 BOARD

Reel Motor Driver

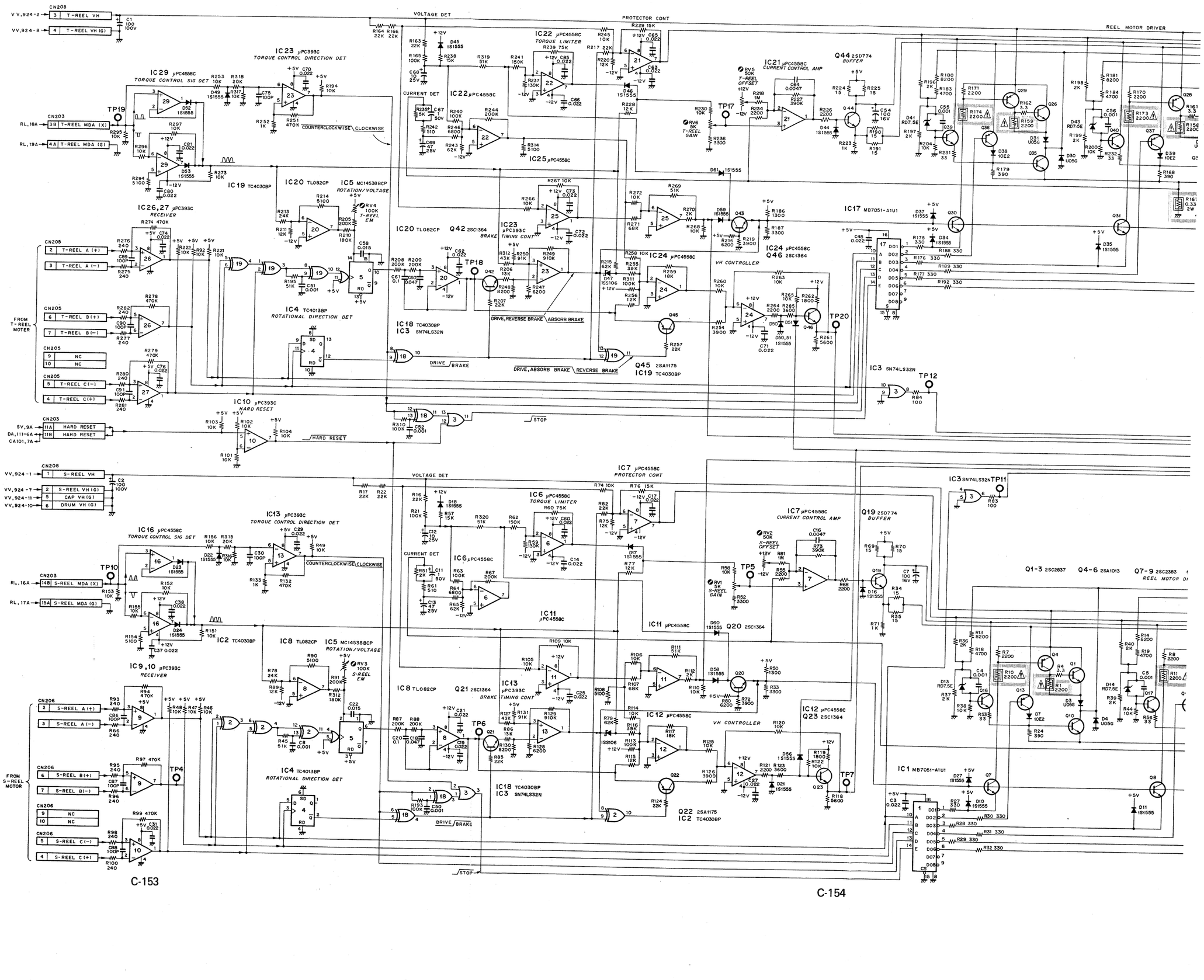

C-153 C-154

PROTECTOR CONT

REEL MOTOR DRIVER

IC22 μPC4558C TORQUE LIMITER

IC21 μPC4558C CURRENT CONTROL AMP

Q44 2SD774 BUFFER

RV5 50K T-REEL OFFSET

RV6 5K T-REEL GAIN

TP17

IC25 μPC4558C

IC23 μPC393C BRAKE TIMING CONT

IC24 μPC4558C

Q46 2SC1364

VH CONTROLLER

IC17 MB7051-A1U1

TP20

IC3 SN74LS32N

TP12

Q45 2SA1175

IC19 TC4030BP

DRIVE, ABSORB BRAKE / REVERSE BRAKE

ABSORB BRAKE / DRIVE, REVERSE BRAKE

STOP

Q24-26 2SC2837
Q27-29 2SA1013
Q30-32 2SC2383
Q33-35 2SC2773
Q36-38 2SA952
Q39-41 2SC1364

TP15 TP14 TP13

CN207
- T-REEL A 1
- T-REEL B 2
- T-REEL C 3
- T-REEL MOTOR TEMP(X) 5
- T-REEL MOTOR TEMP(G) 4
- NC 6

TO T-REEL MOTOR / FROM T-REEL MOTOR

IC30 μPC4558C FG AMP

CN202
- 1 T-REEL FG (V+)
- 2 T-REEL FG (V-)
- 3 T-REEL FG (G)
- 4 T-REEL FG (A)
- 5 T-REEL FG (B)
- 6 T-REEL FG (G)

TP21 TP22

CN203
- T-REEL FG (A) 1A → RL, 9A
- T-REEL FG (G) 2A → RL, 11A
- T-REEL FG (B) 1B → RL, 10A

IC14 μPC358C POWER SUPPLY FOR HOLE ELEMENT

CN205
- T-REEL HE V+ 1
- T-REEL HE V- 8

TO T-REEL MOTOR

CN203
- BOARD(X) 5B
- BOARD(G) 6A
- NC 5A
- NC 13B

IC28 μPC393C OVERHEAT SENSE

REEL TEMP MOUNTED ON HEATSINK (HIGHER THAN 90°C) S1 J1 J2

CN203
- REEL TEMPER 12A → SV, 13B

CN203
- T-REEL PG (X) 6B → RL, 14A
- T-REEL VH CONT (X) 2B → VV, 925-6
- T-REEL VH CONT (G) 3A
- T-REEL POWER 4B → RL, 19B
- OVER HEAT 12B → CA, 101-8B
- OVER HEAT 13A → DA, 111-7A
- S-REEL POWER 14A → RL, 18B
- S-REEL VH CONT (X) 15B → VV, 925-8
- S-REEL VH CONT (G) 16A
- S-REEL PG (X) 7A → RL, 12A
- S/T-REEL PG (G) 7B → RL, 13A
- GND 1

TPE1 TPE2

CN206
- S-REEL HE V+ 1
- S-REEL HE V- 8

TO S-REEL MOTOR

TP3 TP2 TP1

CN209
- S-REEL A 1
- S-REEL B 2
- S REEL C 3
- S-REEL MOTOR TEMP (X) 5
- S REEL MOTER TEMP (G) 4
- NC 6

FROM S-REEL MOTOR

NONFLAMMABLE RESISISTOR

FROM PS-14

CN203
- 8A +12V
- 8B GND
- 9A -12V
- 9B NC
- 10A +5V
- 10B GND

C10,39,41,43-45,47,49 0.022

IC15 μPC4558C FG AMP

CN204
- 1 S-REEL FG (V+)
- 2 S-REEL FG (V-)
- 3 S-REEL FG (G)
- 4 S-REEL FG (A)
- 5 S-REEL FG (B)
- 6 S-REEL FG (G)

TP9 TP8

CN203
- S-REEL FG (A) 16B → RL, 6A
- S-REEL FG (G) 17B → RL, 8A
- S-REEL FG (B) 17A → RL, 7A

RA-05 BOARD
BOARD NO. 1-606-694-11
BVH-2000(J); #10001-11299
BVH-2000(U/C); #10001-11399
BVH-2000PS; #10001-11199
BVH-2000PM; #10001-10199

IC7 μPC4558C PROTECTOR CONT

IC6 μPC4558C TORQUE LIMITER

IC7 μPC4558C CURRENT CONTROL AMP

Q19 2SD774 BUFFER

RV2 50K S-REEL OFFSET

RV1 5K S-REEL GAIN

TP5

IC11 μPC4558C

IC13 μPC393C BRAKE TIMING CONT

IC12 μPC4558C

Q23 2SC1364

VH CONTROLLER

IC1 MB7051-A1U1

TP7

IC18 TC4030BP
IC3 SN74LS32N

Q22 2SA1175
IC2 TC4030BP

Q1-3 2SC2837 Q4-6 2SA1013 Q7-9 2SC2383 Q10-12 2SC2773 Q13-15 2SA952 Q16-18 2SC1364
REEL MOTOR DRIVER

RA-05 BOARD (1-606-694-13, 14)
Component Side

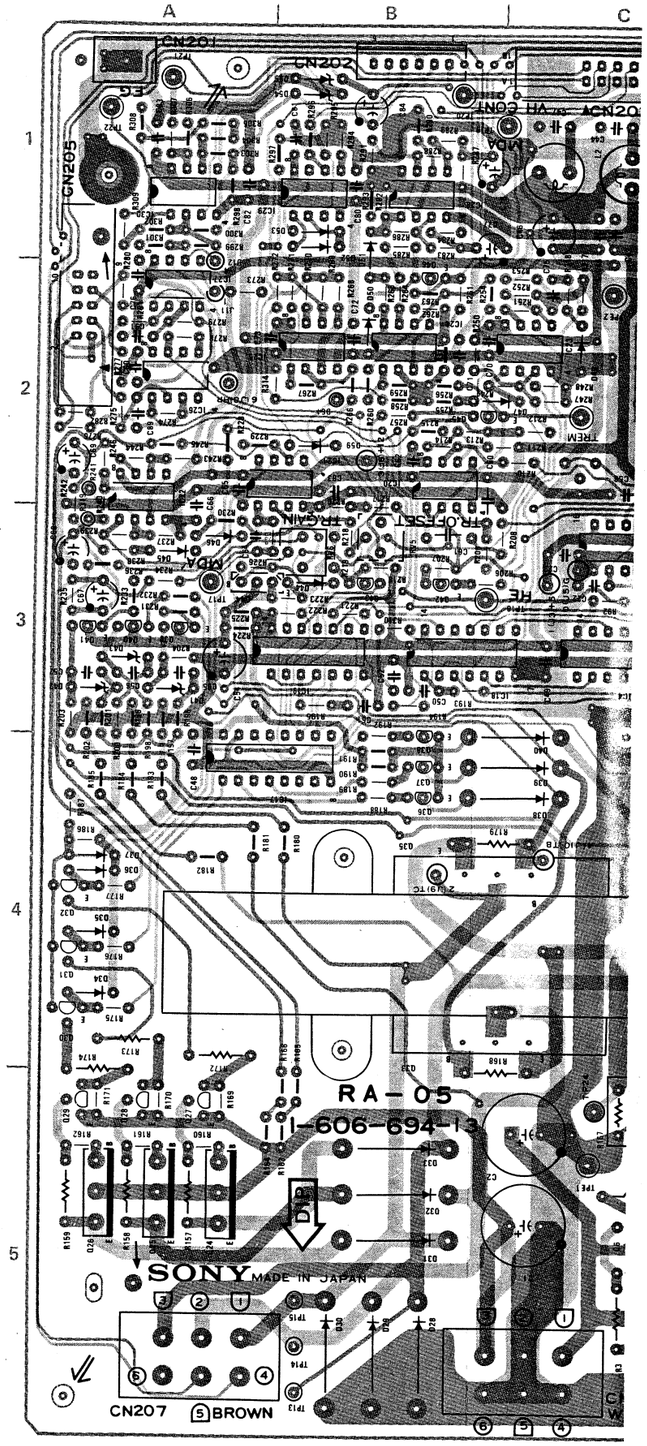

1-606-694-13 COMPONENT SIDE

SW-14 BOARD (1-609-900-11)
Component Side

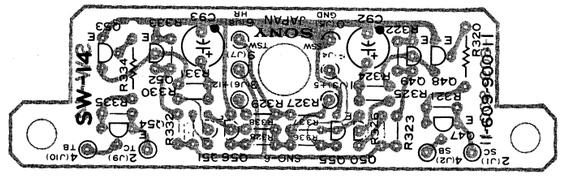

1-609-900-11

RA-05 BOARD (1-606-694-13, 14)

Component Side

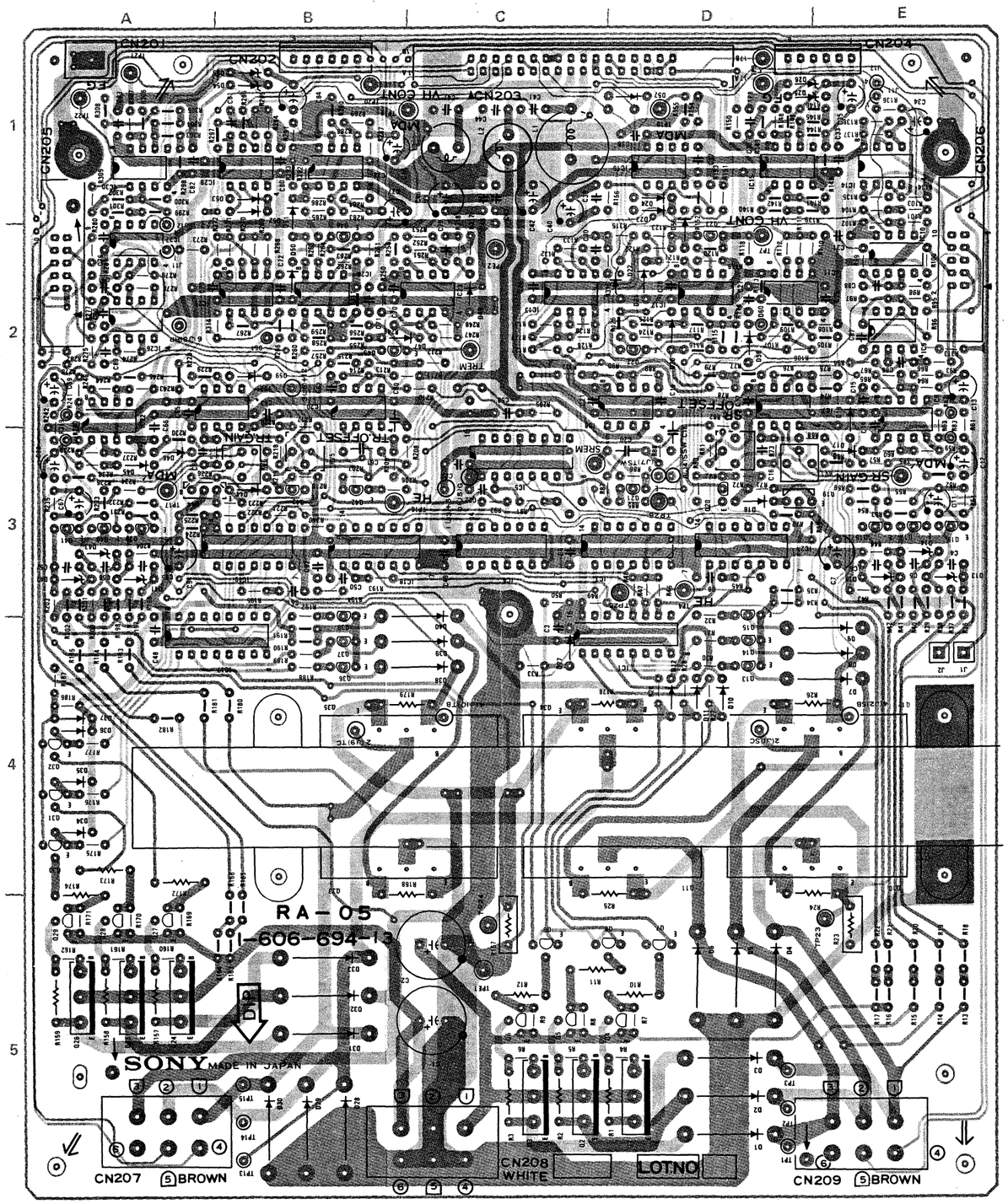

■ 1-606-694-13 COMPONENT SIDE

C-155(3/7)

SW-14 BOARD (1-609-900-11)

Component Side

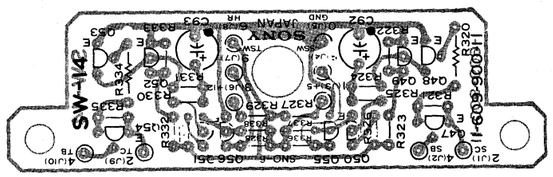

■ 1-609-900-11

■ 1-606-694-13
C-155(4/7)

RA-05 (1-606-694-13 & UP)

BVH-2000(J,U/C)
BVH-2000PS
BVH-2000PM
BVH-2500(J,U/C)

CN201M		Q1	5D
	1A	Q2	5C
CN202M		Q3	5C
	1B	Q4	5D
CN203M		Q5	5C
	1C	Q6	5C
CN204M		Q7	5D
	1E	Q8	5C
CN205M		Q9	5C
	2A	Q10	4E
CN206M		Q11	4D
	2E	Q12	4E
CN207M		Q13	4D
	5A	Q14	4D
CN208M		Q15	3D
	5C	Q16	3E
CN209M		Q17	3E
	5E	Q18	3E
		Q19	3D
D1	5D	Q20	3D
D2	5D	Q21	3D
D3	5D	Q22	2D
D4	5D	Q23	2D
D5	5D	Q24	5A
D6	5D	Q25	5A
D7	4E	Q26	5A
D8	4E	Q27	5A
D9	4E	Q28	5A
D10	4D	Q29	5A
D11	4D	Q30	4A
D12	4D	Q31	4A
D13	3E	Q32	4A
D14	3E	Q33	4B
D15	3E	Q34	4D
D16	3D	Q35	4B
D17	3E	Q36	4B
D18	2E	Q37	4B
D20	2D	Q38	3B
D21	2D	Q39	3A
D22	2D	Q40	3A
D23	1D	Q41	3A
D24	1D	Q42	3B
D25	1D	Q43	3B
D26	1D	Q44	3A
D27	4C	Q45	2B
D28	5B	Q46	2B
D29	5B		
D30	5B	(SW-14 BOARD)	
D31	5B	Q47	4D
D32	5B	Q48	3D
D33	5B	Q49	3D
D34	4A	Q50	4C
D35	4A	Q51	4C
D36	4A	Q52	3B
D37	4A	Q53	3B
D38	4B	Q54	4B
D39	4B	Q55	4C
D40	3B	Q56	4C
D41	3A		
D42	3A	RV1	3D
D43	3A	RV2	3D
D44	3A	RV5	3B
D45	3A	RV6	3B
D46	3A		
D47	2B	TP1	5D
D49	2C	TP2	5D
D50	2B	TP3	5D
D51	1B	TP4	3D
D52	1B	TP5	3E
D53	1B	TP7	2D
D54	1B	TP8	1D
D55	1B	TP9	1D
D56	2D	TP10	1D
D57	1D	TP13	5B
D58	2D	TP14	5B
D59	2B	TP15	5B
D60	2B	TP16	3B
D61	2D	TP17	3A
		TP19	1B
IC1	4D	TP20	1B
IC2	3D	TP21	1A
IC3	3D	TP22	1A
IC4	3C	TP23	5E
IC5	3C	TP24	5C
IC6	3E	TP25	3D
IC7	2D	TP26	3D
IC8	2D		
IC9	2E	TPE1	5C
IC10	2E	TPE2	2C
IC11	2D		
IC12	2D		
IC13	2C		
IC14	1E		
IC15	1D		
IC16	1D		
IC17	4B		
IC18	3B		
IC19	3B		
IC20	2B		
IC21	2B		
IC22	2A		
IC23	2C		
IC24	2B		
IC25	2B		
IC26	2A		
IC27	2A		
IC28	1B		
IC29	1B		
IC30	1A		

RA-05 BOARD

Reel Motor Driver

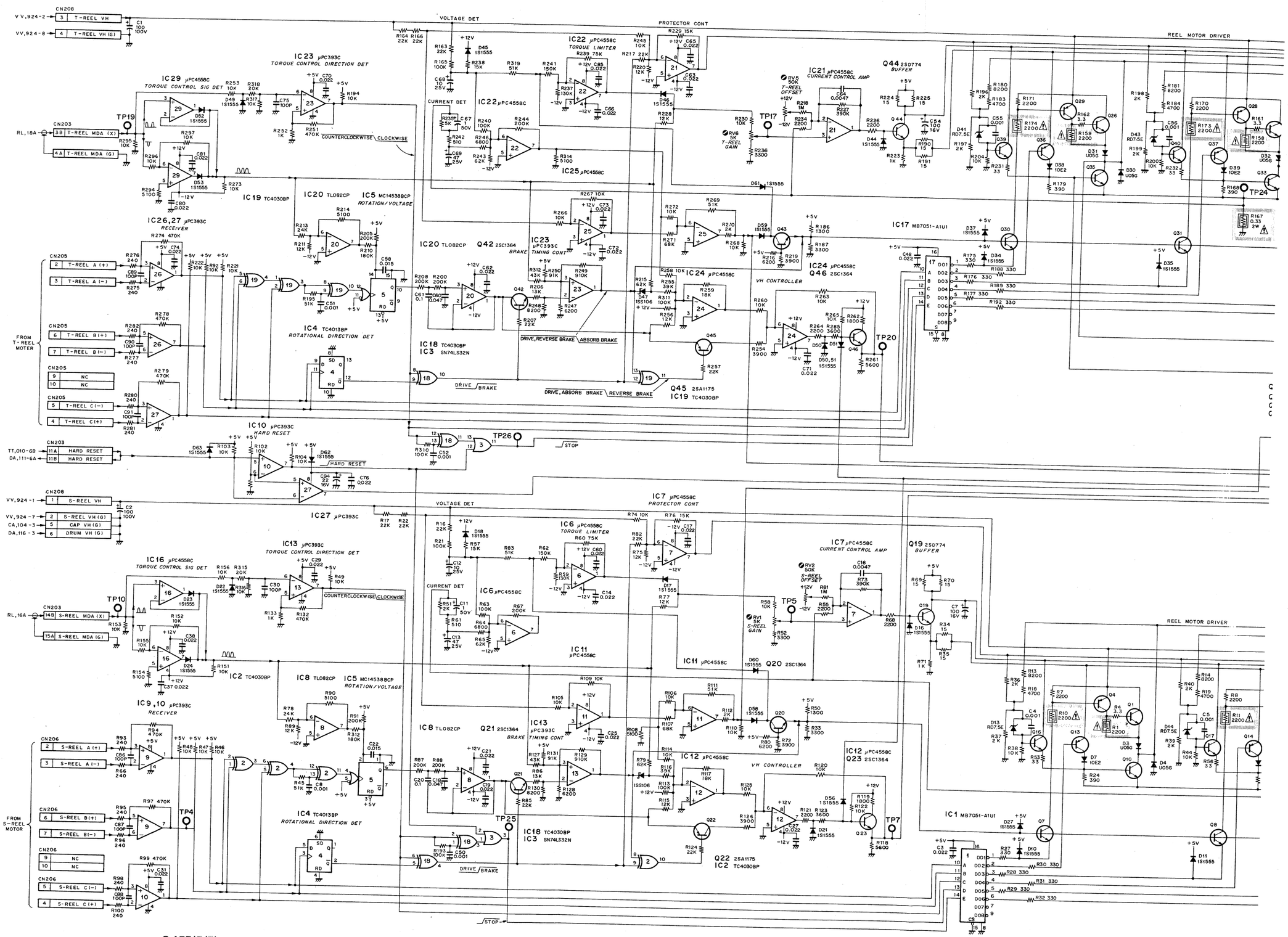

C-155(5/7)

C-155(6/7)

PROTECTOR CONT
REEL MOTOR DRIVER
IC22 µPC4558C TORQUE LIMITER
IC21 µPC4558C CURRENT CONTROL AMP
Q44 2SD774 BUFFER
RV5 50K T-REEL OFFSET
RV6 5K T-REEL GAIN
TP17
TP24
IC25 µPC4558C
IC17 MB7051-A1U1
Q24-26 2SC2837
Q27-29 2SA1013
Q30-32 2SC2383
Q33-35 2SC2773
Q36-38 2SA952
Q39-41 2SC1364
IC23 µPC393C TIMING CONT
IC24 µPC4558C
Q46 2SC1364
VH CONTROLLER
TP20
DRIVE, REVERSE BRAKE \ ABSORB BRAKE
DRIVE, ABSORB BRAKE \ REVERSE BRAKE
Q45 2SA1175
IC19 TC4030BP
STOP
Q51,52 2SC1364
Q53 2SC2551
Q54 2SA1156
Q56 2SC1364
TP15 TP14 TP13
CN207
T-REEL A 1
T-REEL B 2
T-REEL C 3
T-REEL MOTOR TEMP(X) 4
T-REEL MOTOR TEMP(G) 5
NC 6
TO T-REEL MOTOR
FROM T-REEL MOTOR
IC30 µPC4558C FG AMP
CN202
T-REEL FG (V+) 1
T-REEL FG (V-) 2
T-REEL FG (G) 3
T REEL FG (A) 4
T-REEL FG (B) 5
T-REEL FG (G) 6
TP21
TP22
CN203
T-REEL FG (A) 1A
T-REEL FG (G) 2A
T-REEL FG (B) 1B
RL,9A
RL,10A
IC14 µPC358C POWER SUPPLY FOR HOLE ELEMENT
CN205
T-REEL HE V+ 1
T-REEL HE V- 8
IC28 µPC393C OVERHEAT SENSE
CN203
BOARD(Y) 5B
BOARD(Y) 6A
NC 5A
NC 13B
TT,010-17B
DA,111-8A
REEL TEMPER 12A
SV,13B
HIGHER THAN 90°C
S1
REEL TEMP
MOUNTED ON HEATSINK
CN203
T-REEL SW (X) 5B
T-REEL VH CONT(X) 2B
T-REEL VH CONT(G) 3A
T-REEL POWER 4B
OVERHEAT 12B
OVERHEAT 13A
S-REEL POWER 14A
S-REEL VH CONT(X) 15B
S-REEL VH CONT(G) 16A
S-REEL SW(X) 7A
S/T-REEL SW(G) 7B
RL,14A
VV,925-6
RL,19B
CA,101-8B
DA,111-7A
RL,18B
VV,925-8
RL,12A
RL,13A
CN201
GND 1
D57 ERA81-004
TPE1 TPE2
CN206
S-REEL HE V+ 1
S-REEL HE V- 8
TO S-REEL MOTOR
TP3 TP2 TP1
CN209
S-REEL A 1
S-REEL B 2
S REEL C 3
S-REEL MOTOR TEMP(X) 5
S REEL MOTOR TEMP(G) 4
NC 6
FROM S-REEL MOTOR
NONFLAMMABLE RESISISTOR
FROM PS-14
CN203
8A +12V
8B GND
9A -12V
9B NC
10A +5V
10B GND
L3 0.1µH
L2 0.1µH
L1 72µH
C10,39,41,43-45,47,49 0.022
IC15 µPC4558C FG AMP
CN204
S-REEL FG(V+) 1
S-REEL FG(V-) 2
S REEL FG (G) 3
S REEL FG (A) 4
S-REEL FG (B) 5
S-REEL FG (G) 6
TP9
TP8
CN203
S-REEL FG (A) 16B
S-REEL FG (G) 17B
S-REEL FG (B) 17A
RL,6A
RL,7A
IC7 µPC4558C PROTECTOR CONT
IC6 µPC4558C TORQUE LIMITER
IC7 µPC4558C CURRENT CONTROL AMP
Q19 2SD774 BUFFER
RV2 50K S-REEL OFFSET
RV1 5K S-REEL GAIN
TP5
IC11 µPC4558C
Q20 2SC1364
REEL MOTOR DRIVER
IC13 µPC393C BRAKE TIMING CONT
IC12 µPC4558C
Q23 2SC1364
VH CONTROLLER
IC1 MB7051-A1U1
TP25
TP7
IC18 TC4030BP
IC3 SN74LS32N
Q22 2SA1175
IC2 TC4030BP
Q1-3 2SC2837
Q4-6 2SA1013
Q7-9 2SC2383
Q10-12 2SC2773
Q13-15 2SA952
Q16-18 2SC1364
Q47 2SA1156
Q48 2SC2551
Q49,50,55 2SC1364
IC28 µPC393C OVERHEAT SENSE
TPE1 TPE2
TP3 TP2 TP1
C-155(6/7)
C-155(7/7)

RA-05 BOARD
BOARD NO. 1-606-694-12 & UP
BVH-2000(J); #11301-
BVH-2000(U/C); #11401-
BVH-2000PS; #11201-
BVH-2000PM; #10201-
BVH-2500(J); #10001-
BVH-2500(U/C); #10001-

TT-01 BOARD (1-606-697-12)

Component Side

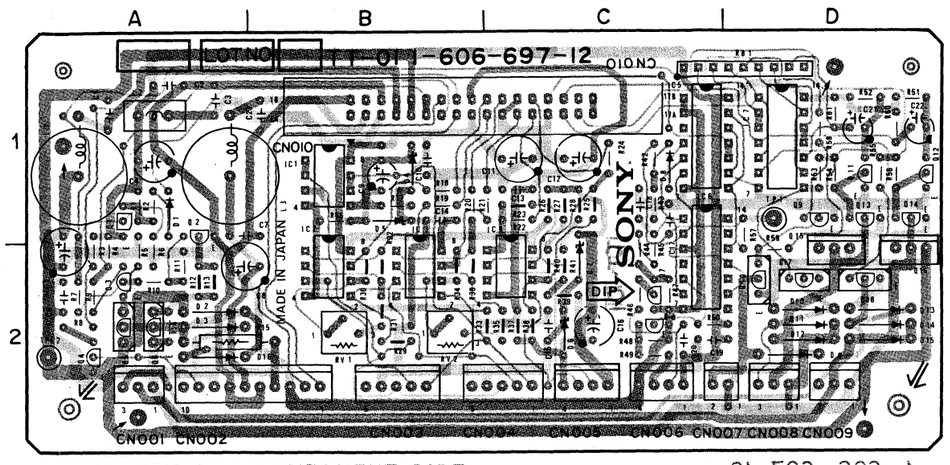

RB1

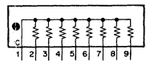

TT-01 (1-606-697-12 & UP)

BVH-2000(J,U/C)	IC1	1B	
BVH-2000PS	IC2	2B	
BVH-2000PM	IC3	2B	
BVH-2500(J,U/C)	IC4	2C	
	IC5	1C	
CN001M	IC6	2C	
2A	IC7	1D	
CN002M			
2A	Q1	1A	
CN003M	Q2	1A	
2B	Q3	2A	
CN004M	Q4	2A	
2C	Q5	2A	
CN005M	Q6	2A	
2C	Q7	2C	
CN006M	Q8	2C	
2C	Q9	1D	
CN007M	Q10	2D	
2C	Q11	1D	
CN008M	Q12	1D	
2D	Q13	1D	
CN009M	Q14	1D	
2D	Q15	2D	
CN010M	Q16	2D	
2B	Q17	2D	
	Q18	2D	
D1 1A			
D2 2A	RB1	1D	
D3 2A			
D4 1B	RV1	2B	
D5 1B	RV2	2B	
D6 2C			
D7 2C	TP1	1D	
D8 1C			
D9 2D	TPE2	2A	
D10 2D			
D11 2D			
D12 2D			
D13 2D			
D14 2D			
D15 2D			
D16 2A			

TT-01 BOARD

TTP AUX (Solenoid, Motor Driver etc.)

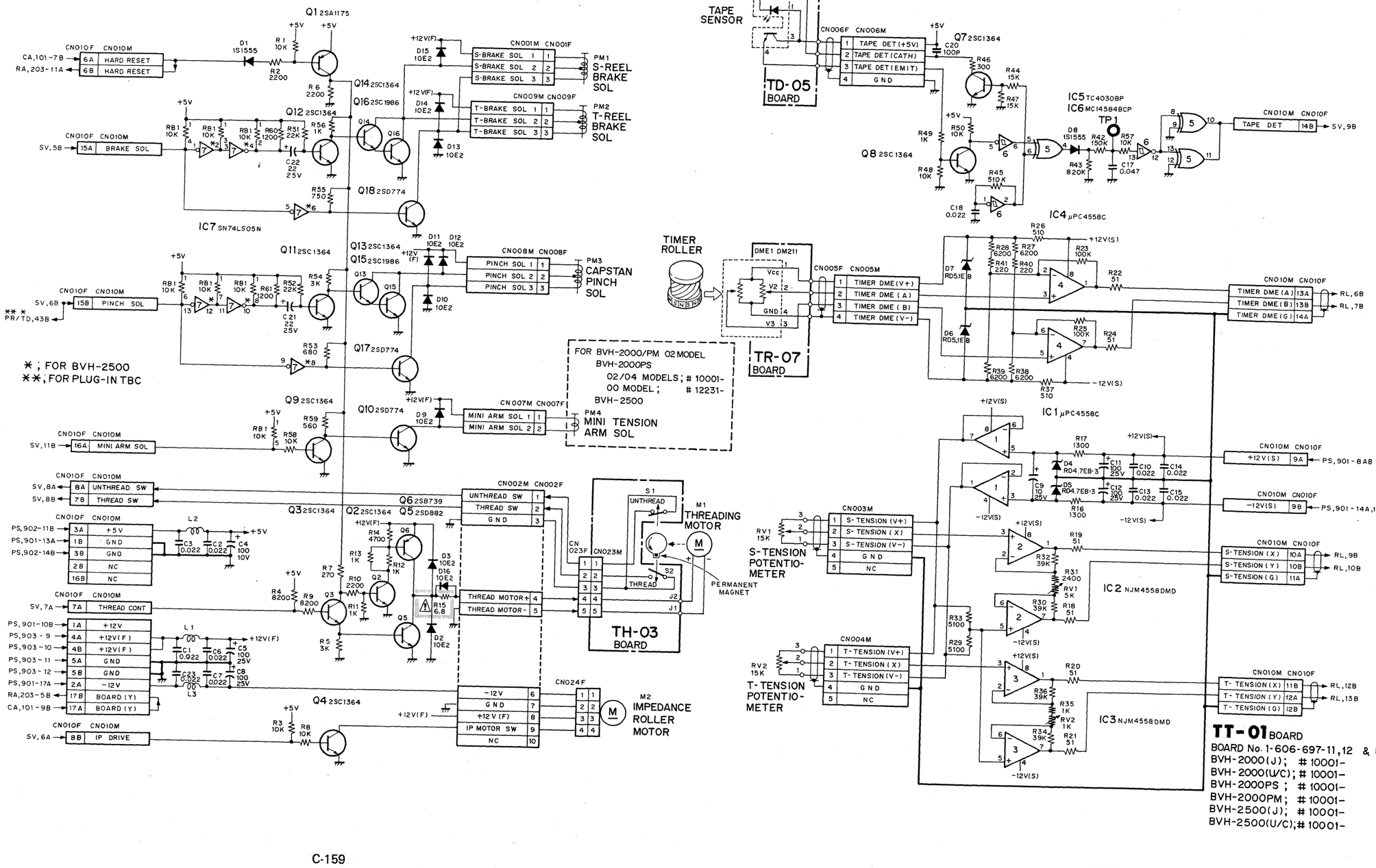

C-159 C-160

TT-01 BOARD
BOARD No. 1-606-697-11,12 & UP
BVH-2000(J); # 10001-
BVH-2000(U/C); # 10001-
BVH-2000PS ; # 10001-
BVH-2000PM; # 10001-
BVH-2500(J); # 10001-
BVH-2500(U/C); # 10001-

FRAME WIRING (1/2) (FOR 02/04) HM-05/06, MOTOR, TM-16, TD-05, TH-03, TR-07 TAPE TRANSPORT

HM-06 BOARD (1-606-700-11)

Component Side

Applicable Serial No.
J: 10001-11299
U/C: 10001-11399
PS: 10001-11199
PM: 10001-10199

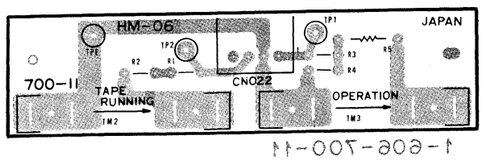

1-606-700-11

MOTOR BOARD (1-602-615-11)

Component Side

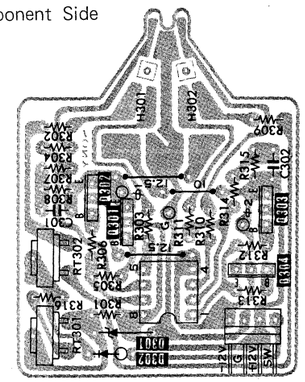

1-602-615-11
SOLDER SIDE

TM-16 BOARD (1-609-959-11)

Component Side

Applicable Serial No.
J: 11301-
U/C: 11401-
PS: 11201-
PM: 10201-

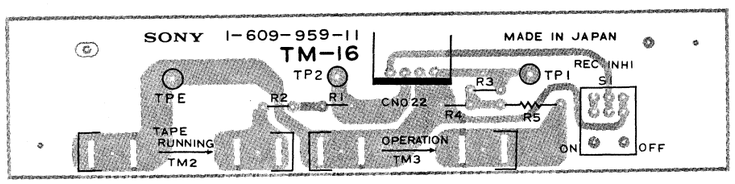

1-609-959-11

HM-05 BOARD (1-606-699-11)

Component Side

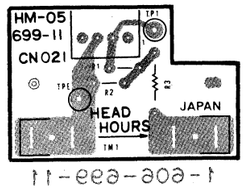

1-606-699-11

TD-05 BOARD (1-606-702-12)

Component Side

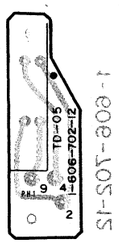

1-606-702-11

TH-03 BOARD (1-606-701-11)

Solder Side

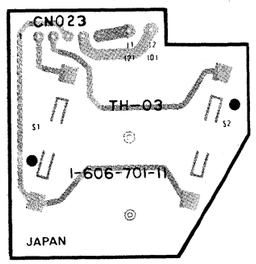

1-606-701-11
SOLDER SIDE

TR-07 BOARD (1-606-698-11)

Solder Side

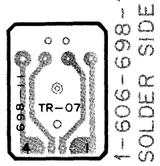

1-606-698-11
SOLDER SIDE

FRAME WIRING (1/2); TAPE TRANSPORT; FOR 02/04 MODEL

HM-05 BOARD: Head Hours Meter
HM-06 BOARD: Tape Running/Operation Hours Meter
TM-16 BOARD: Tape Running/Operation Hours Meter & REC Inhibit Switch
TD-05 BOARD: Tape Detector
TH-03 BOARD: Threading Motor
TR-07 BOARD: Timer Roller Sensor
MOTOR BOARD; Impedance Roller Motor

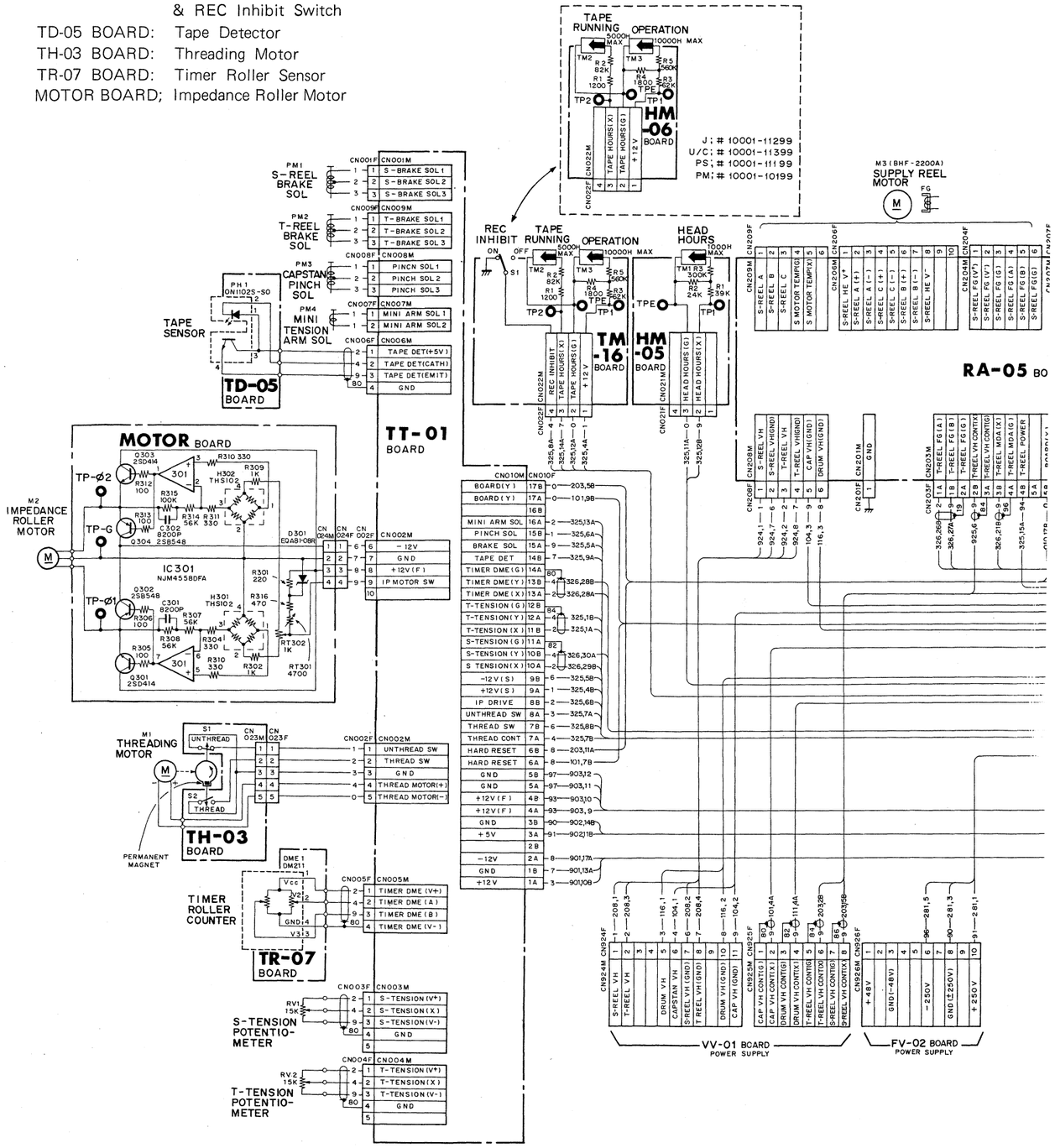

FRAME WIRING (1/2) (FOR 02/04) HM-05/06, MOTOR, TM-16, TD-05, TH-03, TR-07 TAPE TRANSPORT

FRAME WIRING(FOR02/04) TAPE TRANSPORT(1/2)

BVH-2000 (J) : # 10001 –
BVH-2000(U/C) : # 10001 –
BVH-2000PS : # 10001 –
BVH-2000PM : # 10001 –

FRAME WIRING (1/2); TAPE TRANSPORT; FOR 00 MODEL

HM-05 BOARD: Head Hours Meter
HM-06 BOARD: Tape Running/Operation Hours Meter
TM-16 BOARD: Tape Running/Operation Hours Meter
& REC Inhibit Switch
TD-05 BOARD: Tape Detector
TH-03 BOARD: Threading Motor
TR-07 BOARD: Timer Roller Sensor
MOTOR BOARD; Impedance Roller Motor

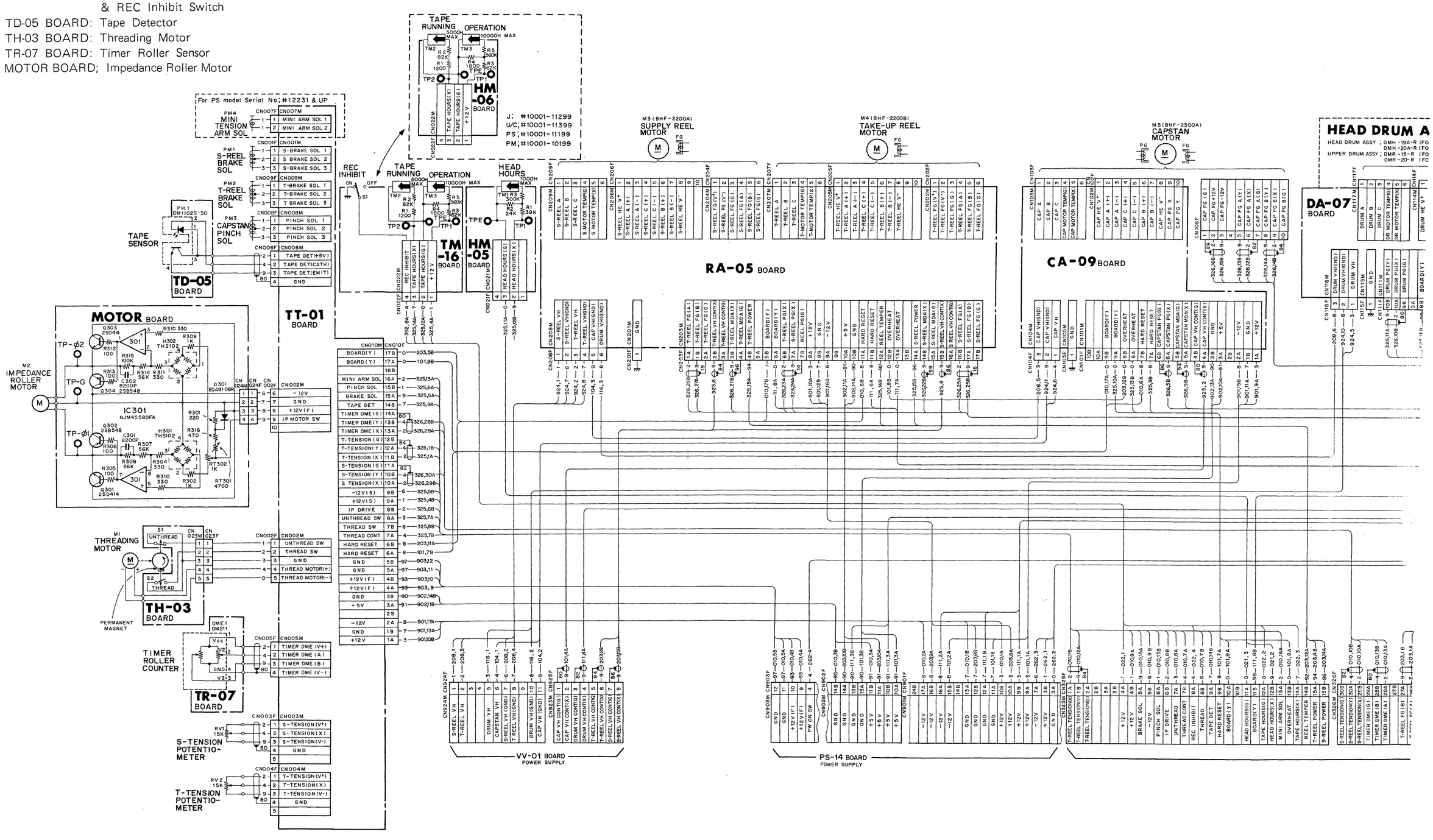

C-166(2/7)

C-166(3/7)

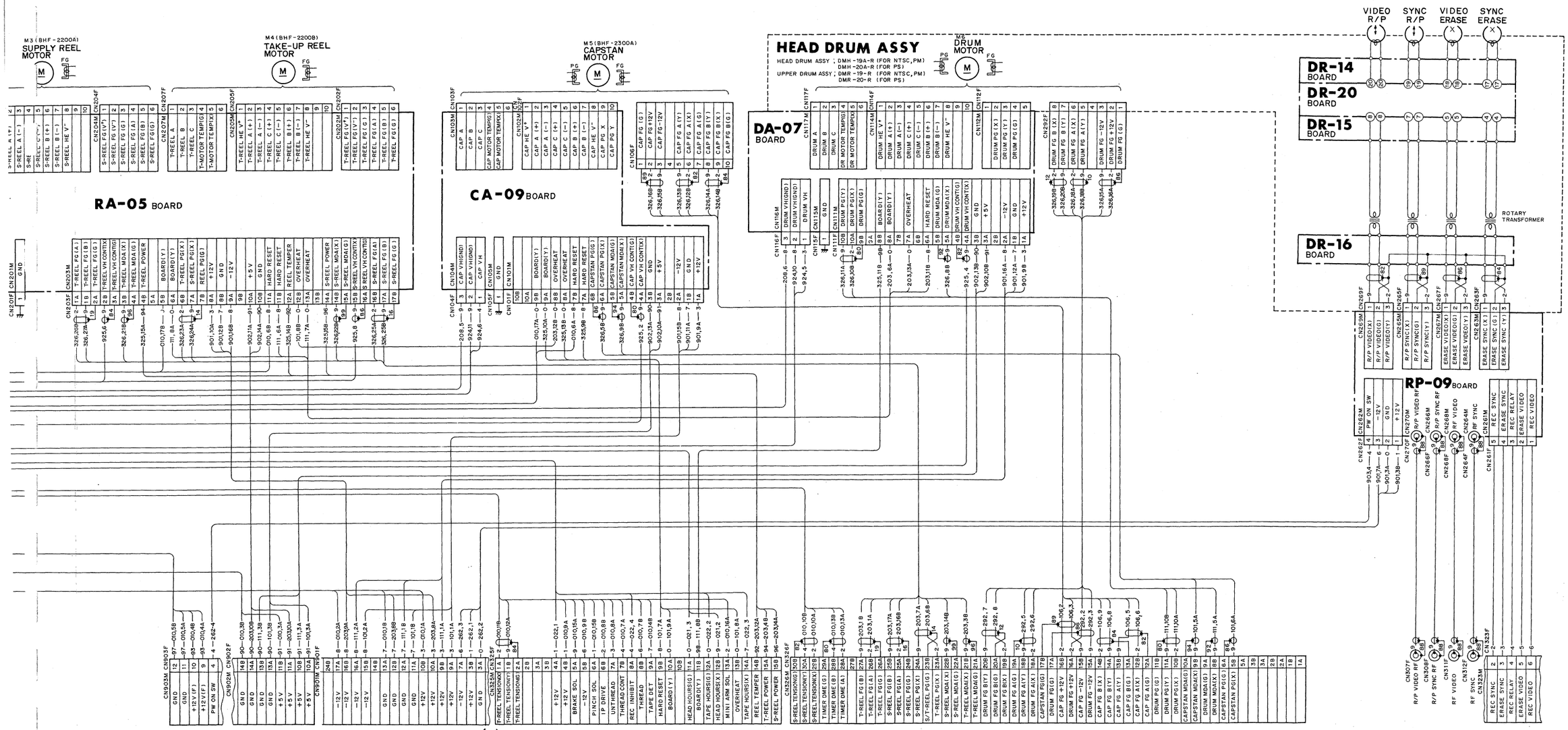

FRAME WIRING(FOR 00)

TAPE TRANSPORT(1/2)

BVH-2000 (J) : # 10001 -
BVH-2000(U/C): # 10001 -
BVH-2000PS : # 10001 -
BVH-2000PM : # 10001 -

FRAME WIRING (2/2) **(FOR 00/02)** CEH-2, HD-06/07 TAPE TRANSPORT

FRAME WIRING (2/2); TAPE TRANSPORT; FOR 00/02 MODEL

HD-06 BOARD: Video/Sync Erase Head
CEH-2 BOARD: Audio/CTL Erase Head
HD-07 BOARD: Audio/CTL R/P, Monitor Head

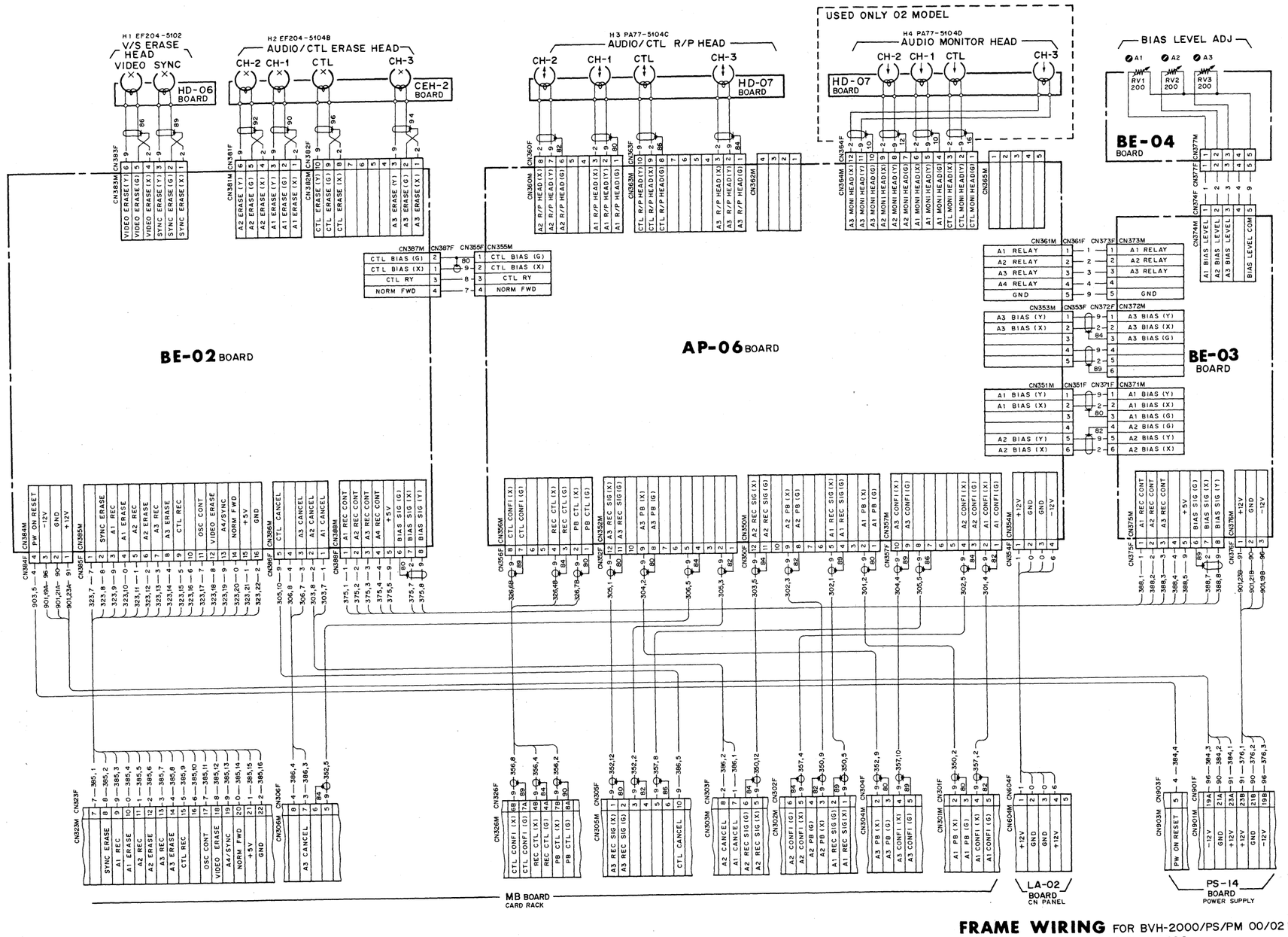

HD-06 BOARD (1-606-679-11)
Solder Side

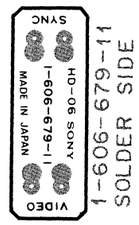

1-606-679-11
SOLDER SIDE

CEH-2 BOARD (1-588-946-11)
Solder Side

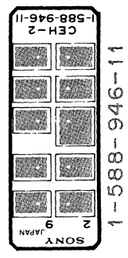

1-588-946-11
SOLDER SIDE

HD-07 BOARD (1-606-680-12)
Solder Side

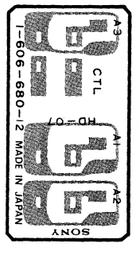

1-606-680-12
SOLDER SIDE

FRAME WIRING FOR BVH-2000/PS/PM 00/02 MODEL & BVH-2500

TAPE TRANSPORT(2/2)

BVH-2000(J) ; # 10001 –
BVH-2000(U/C); # 10001 –
BVH-2000 PS ; # 10001 –
BVH-2000 PM , # 10001 –

BVH-2500(J), # 10001 –
BVH-2500(U/C); # 10001 –

FRAME WIRING (2/2); TAPE TRANSPORT; FOR 04 MODEL

HD-06 BOARD; Video/Sync Erase Head
CEH-2 BOARD; Audio/CTL Erase Head
HD-08 BOARD; Audio/CTL R/P, Monitor Head

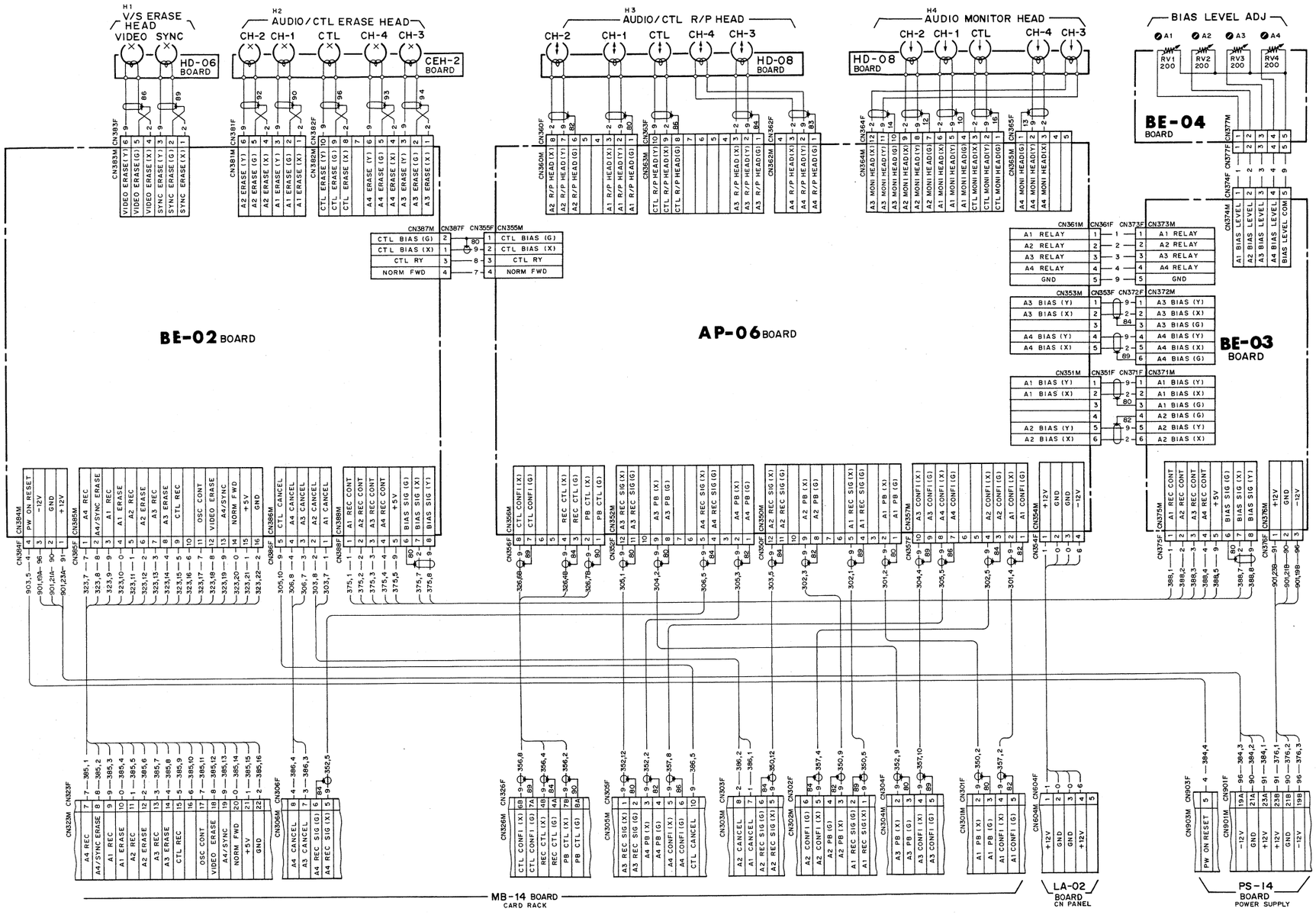

FRAME WIRING (FOR 04)

TAPE TRANSPORT(2/2)

BVH-2000PS;#10001-

HD-06 BOARD (1-606-679-11)
Solder Side

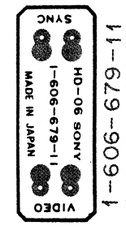

1-606-679-11
SOLDER SIDE

CEH-2 BOARD (1-588-946-11)
Solder Side

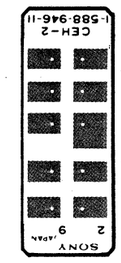

1-588-946-11
SOLDER SIDE

HD-08 BOARD (1-606-681-12)
Solder Side

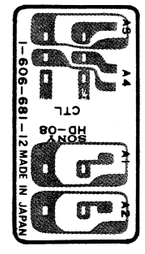

1-606-681-12
SOLDER SIDE

VR-05 **(FOR 00/02)** LEVEL CONTROL PANEL

VR-05 **BOARD (1-606-677-13) ; FOR 00/02 MODEL**

Component Side

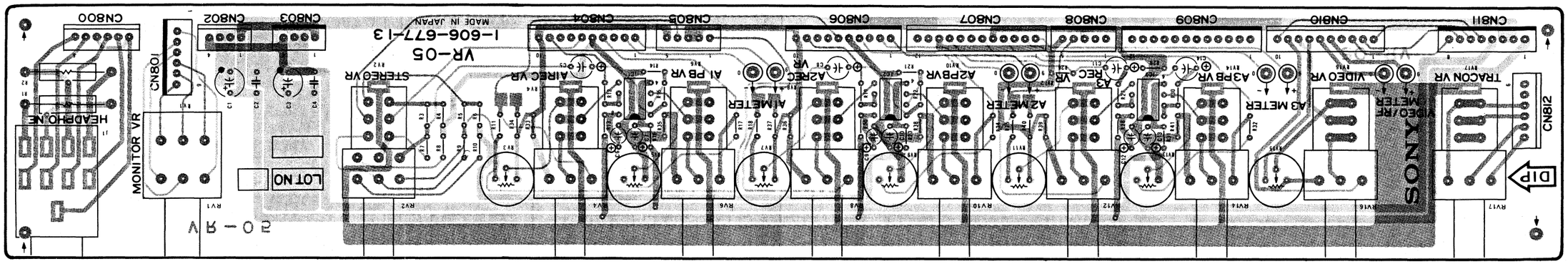

1-606-677-13 COMPONENT SIDE

VR-05 BOARD; FOR 00/02 MODEL

Level Control/Indicator

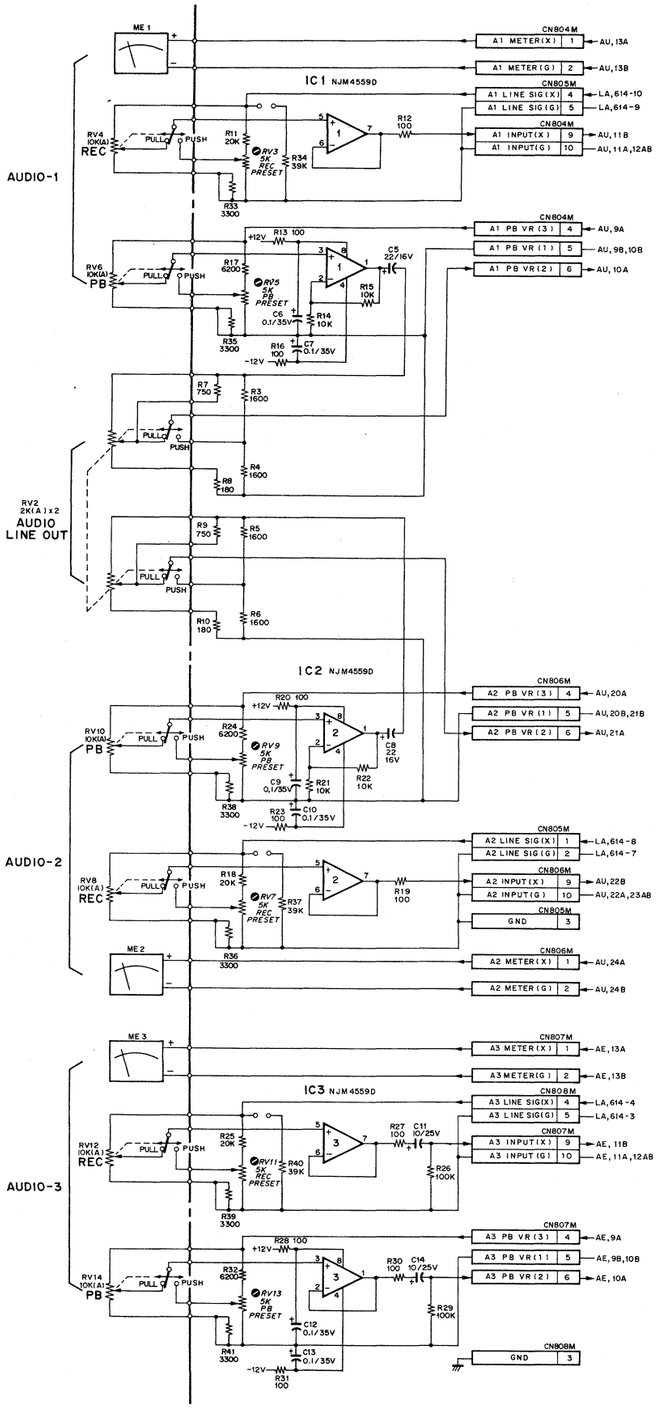

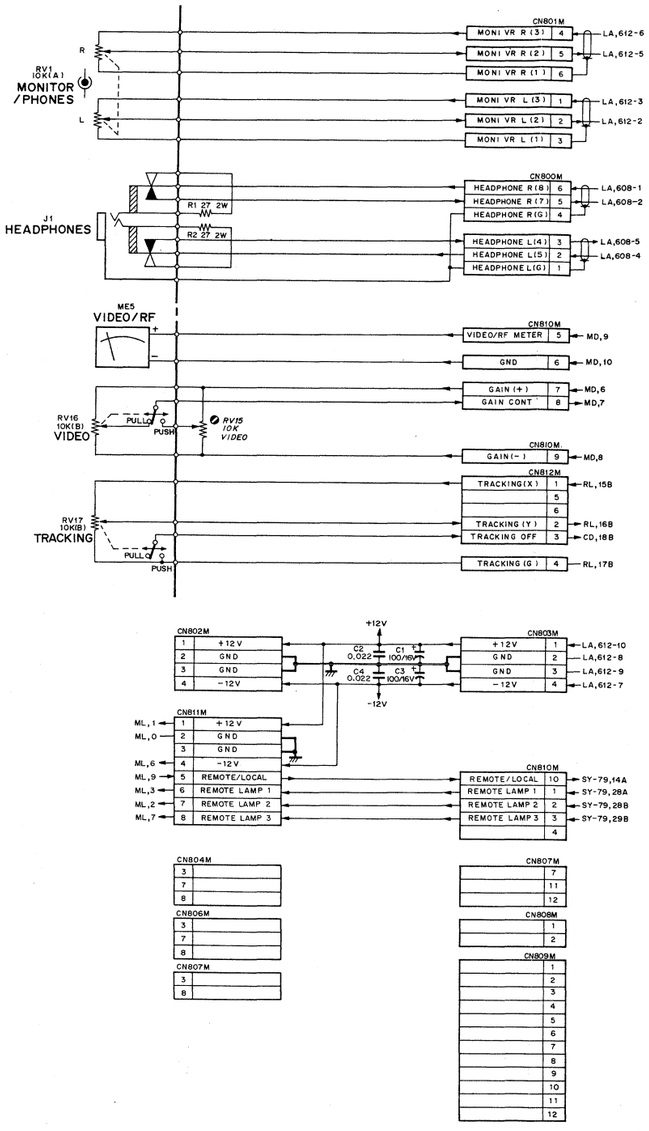

VR-05 BOARD FOR BVH-2000/PS/PM 00/02 MODEL & BVH-2500
BOARD NO 1-606-677-11/-12/-13 & UP

BVH-2000(J); #10001-
BVH-2000(U/C); #10001-
BVH-2000PS; #10001-
BVH-2000PM; #10001-

BVH-2500(J); #10001-
BVH-2500(U/C); #10001-

VR-07 **(FOR 04)** LEVEL CONTROL PANEL

VR-07 BOARD (1-606-678-11) ; FOR 04 MODEL

Component Side

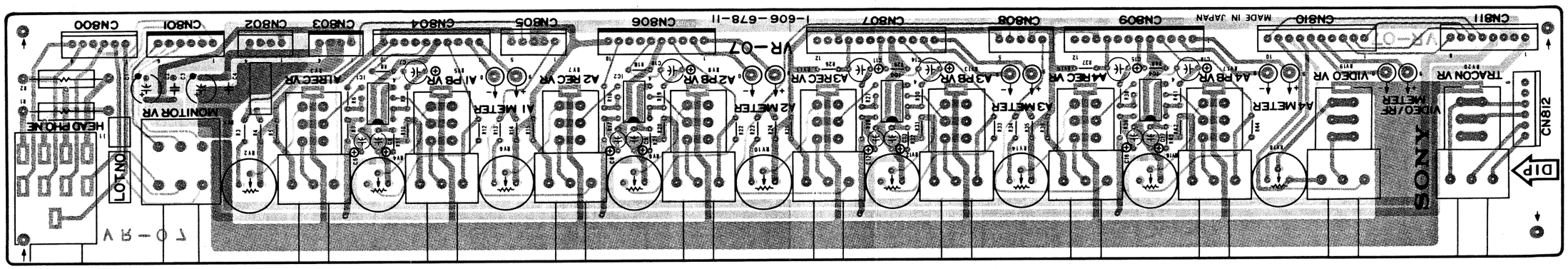

1-606-678-11 COMPONENT SIDE

1-606-678-11

VR-07 **(FOR 04)** LEVEL CONTROL PANEL

VR-07 BOARD; FOR 04 MODEL

Level Control/Indicator

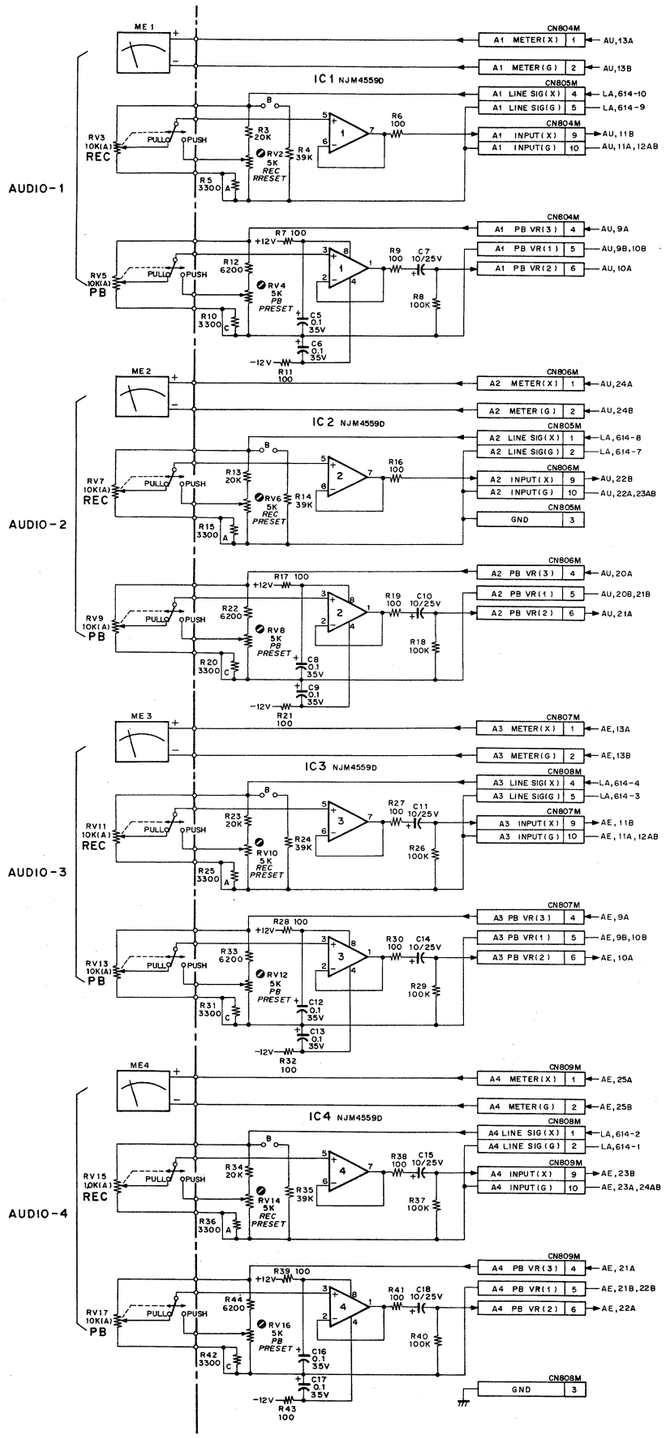

C-172(4/5)

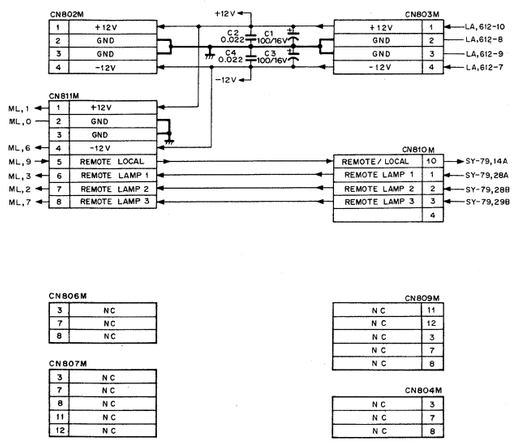

VR-07 BOARD (FOR 04)
BOARD NO. 1-606-678-11
BVH-2000PS; #10001-

C-172(5/5)

FRAME WIRING (FOR 00/02) ML-02, MS-07 LEVEL CONTROL PANEL

FRAME WIRING; LEVEL CONTROL PANEL; **FOR 00/02 MODEL**

ML-02 BOARD: Meter Lamp
MS-07 BOARD: Monitor Select

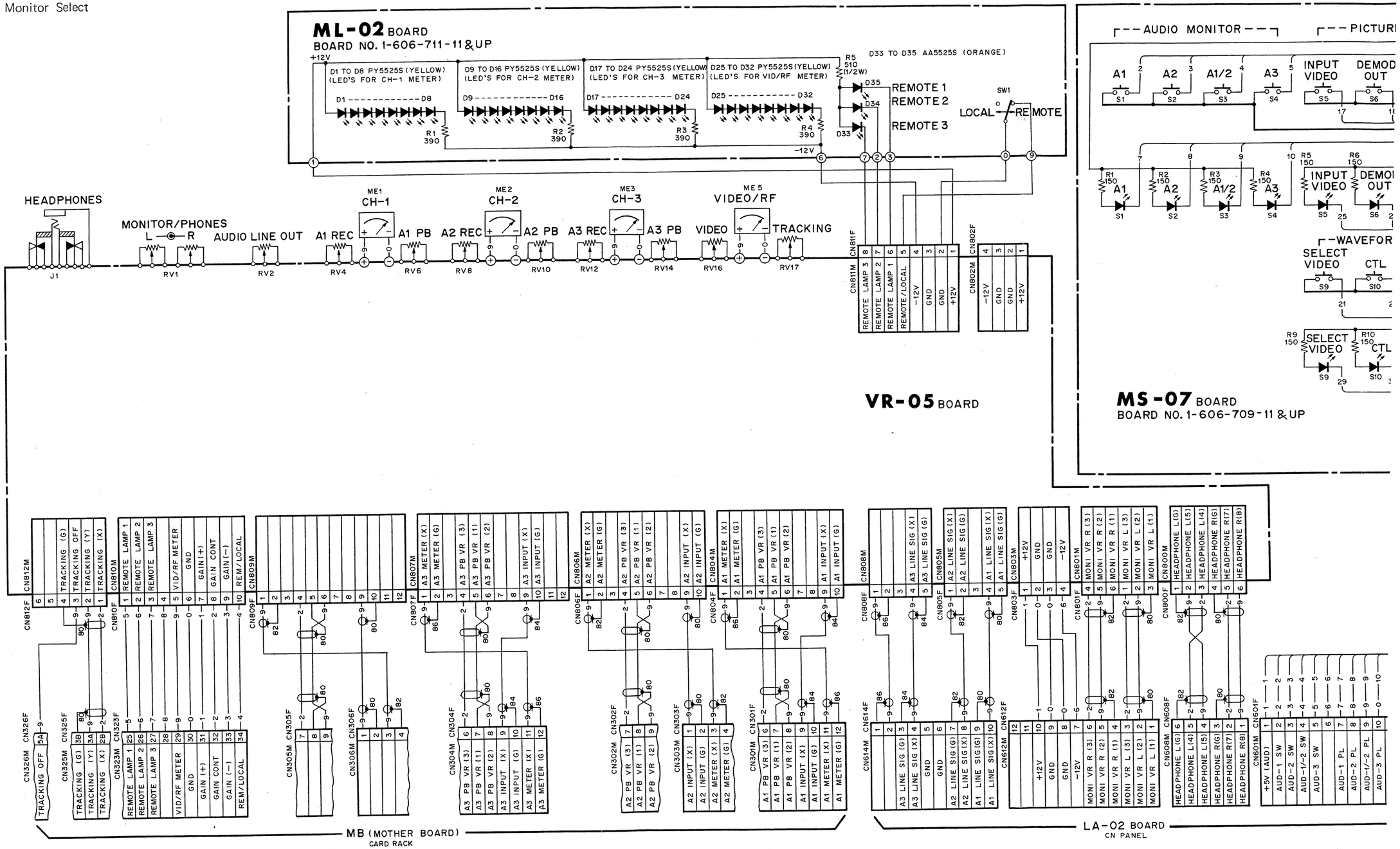

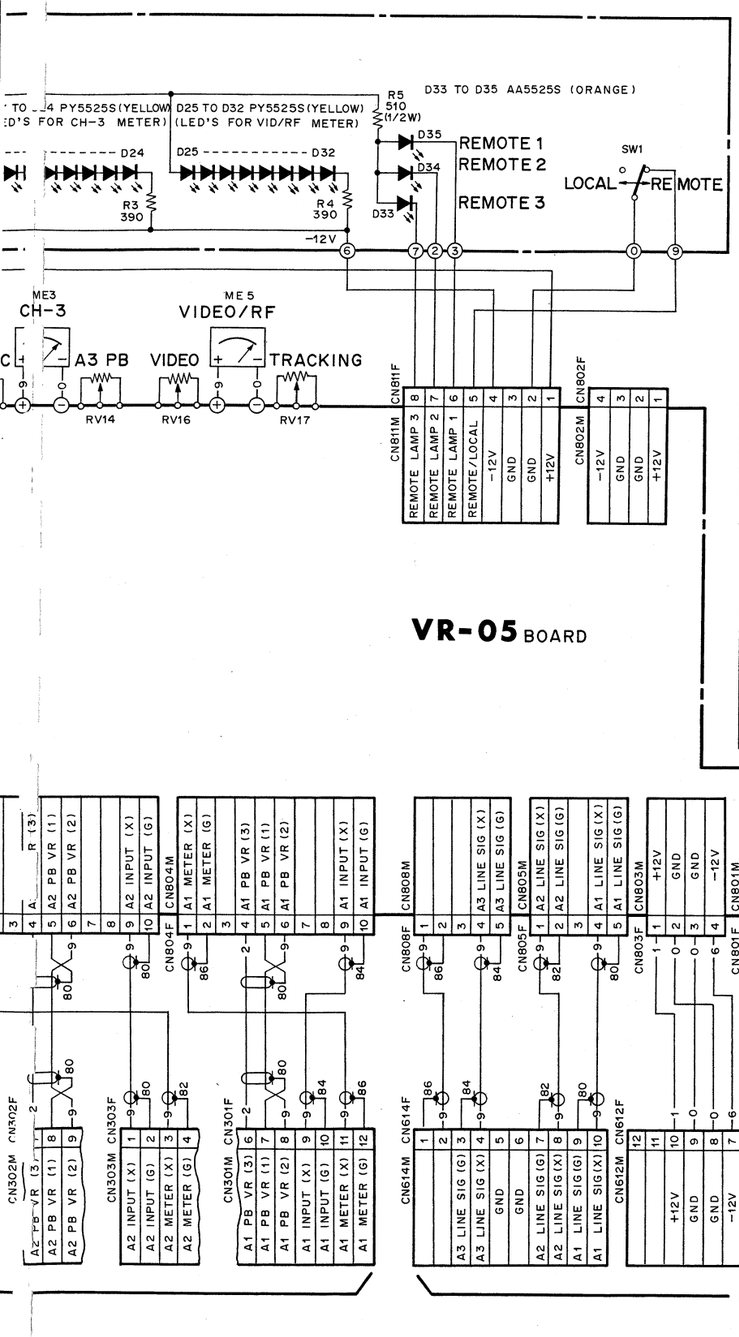

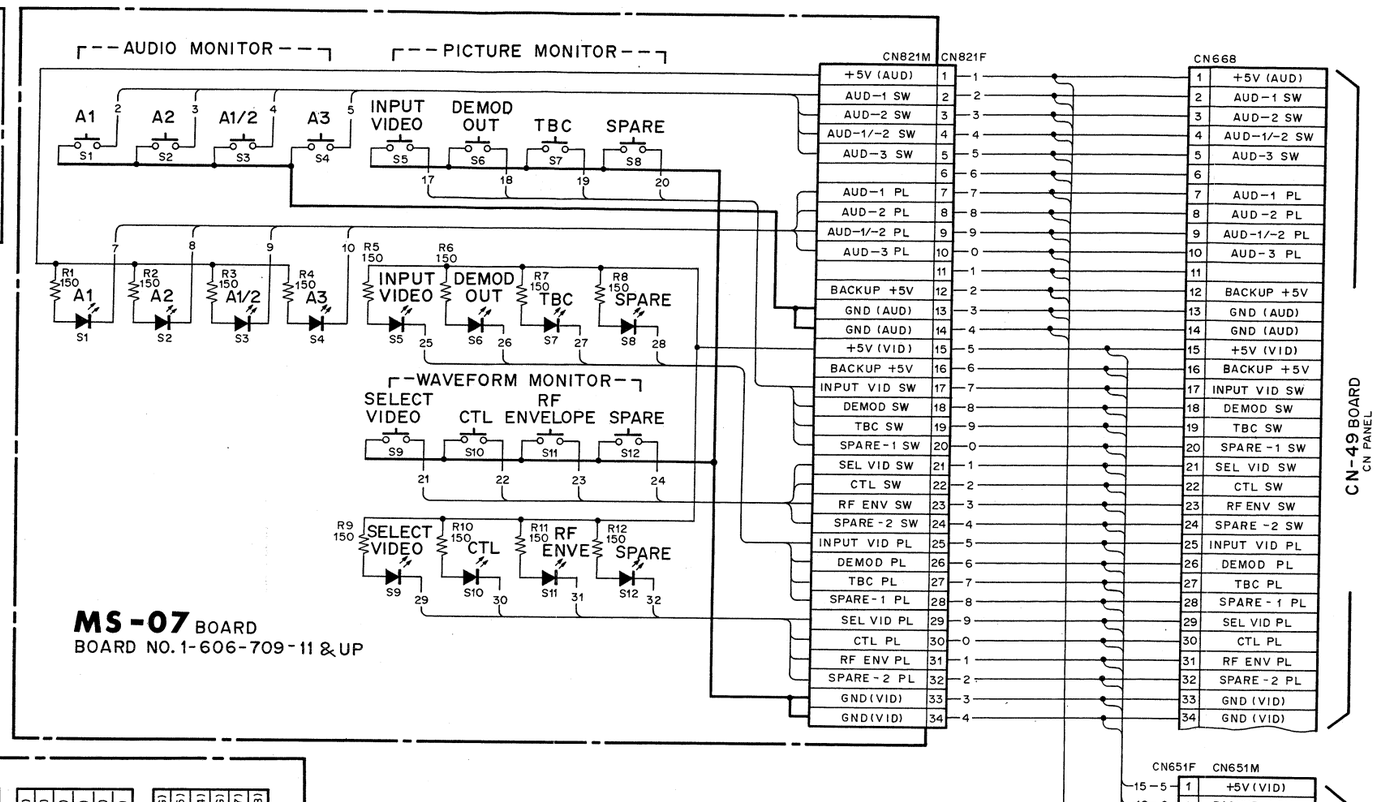

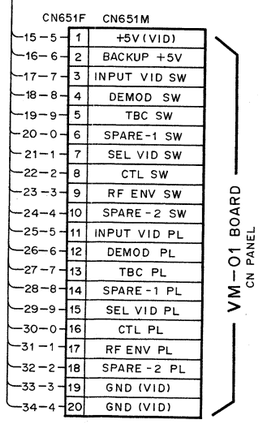

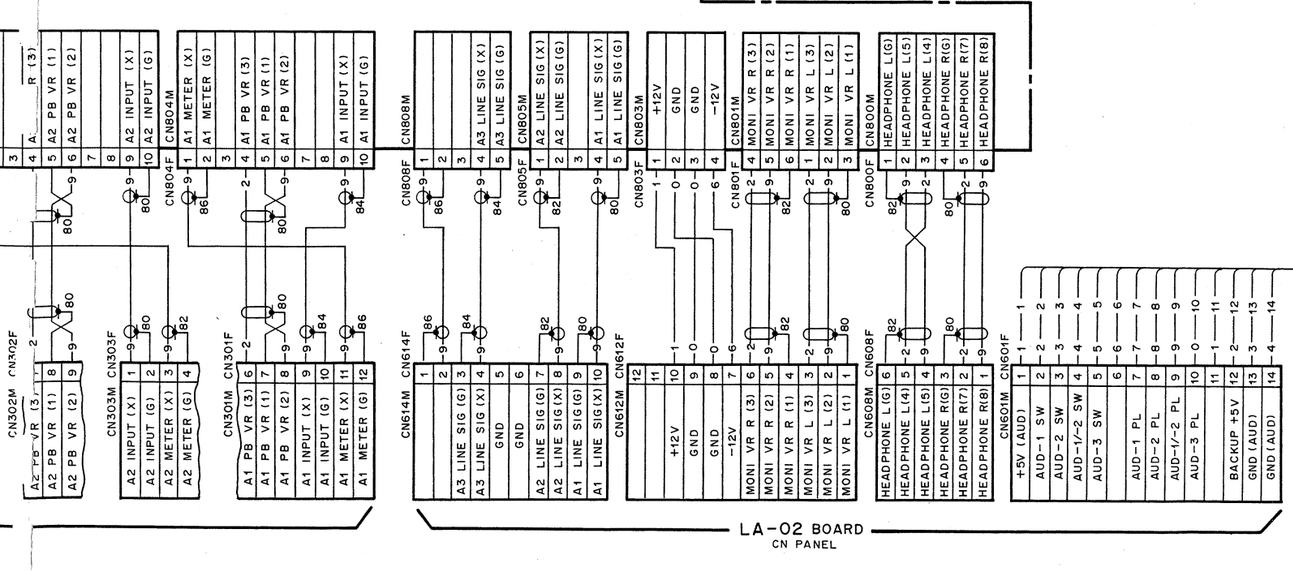

FRAME WIRING FOR BVH-2000/PS/PM 00/02 MODEL & BVH-2500

LEVEL CONTROL PANEL

BVH-2000(J); #10001-
BVH-2000(U/C); #10001-
BVH-2000PS; #10001-
BVH-2000PM; #10001-

BVH-2500(J); #10001-
BVH 2500(U/C); #10001-

ML-03 BOARD (1-606-712-11)

Component Side

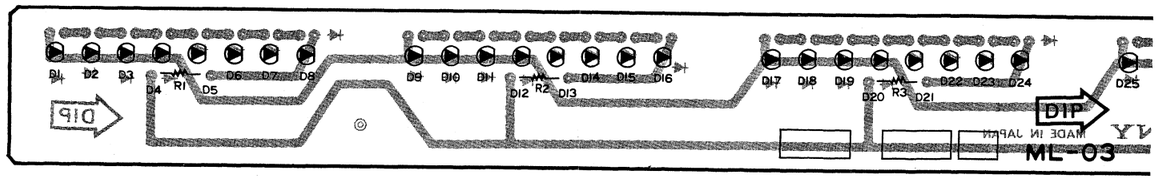

ML-03, MS-08 **(FOR 04)** LEVEL CONTROL PANEL

ML-03 **BOARD (1-606-712-11)**

Component Side

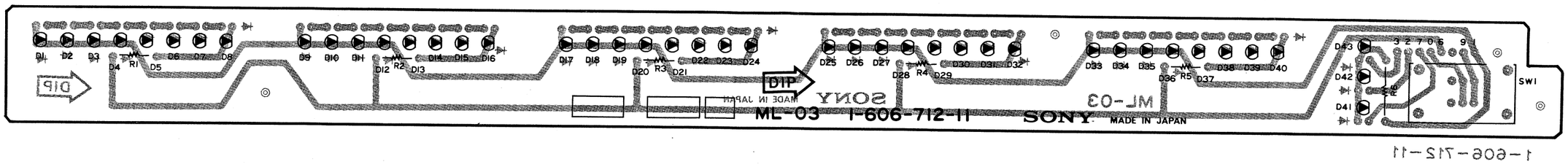

MS-08 **BOARD (1-606-710-11)**

Component Side

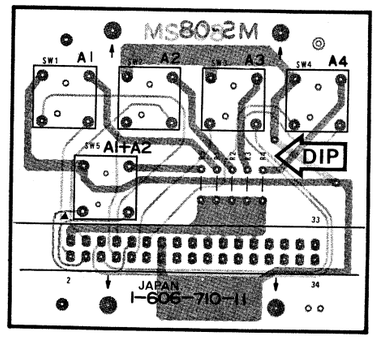

1-606-710-11
COMPONENT SIDE
1-606-710-11

FRAME WIRING; LEVEL CONTROL PANEL; **FOR 04 MODEL**

ML-03 BOARD; Meter Lamp
MS-08 BOARD; Monitor Select

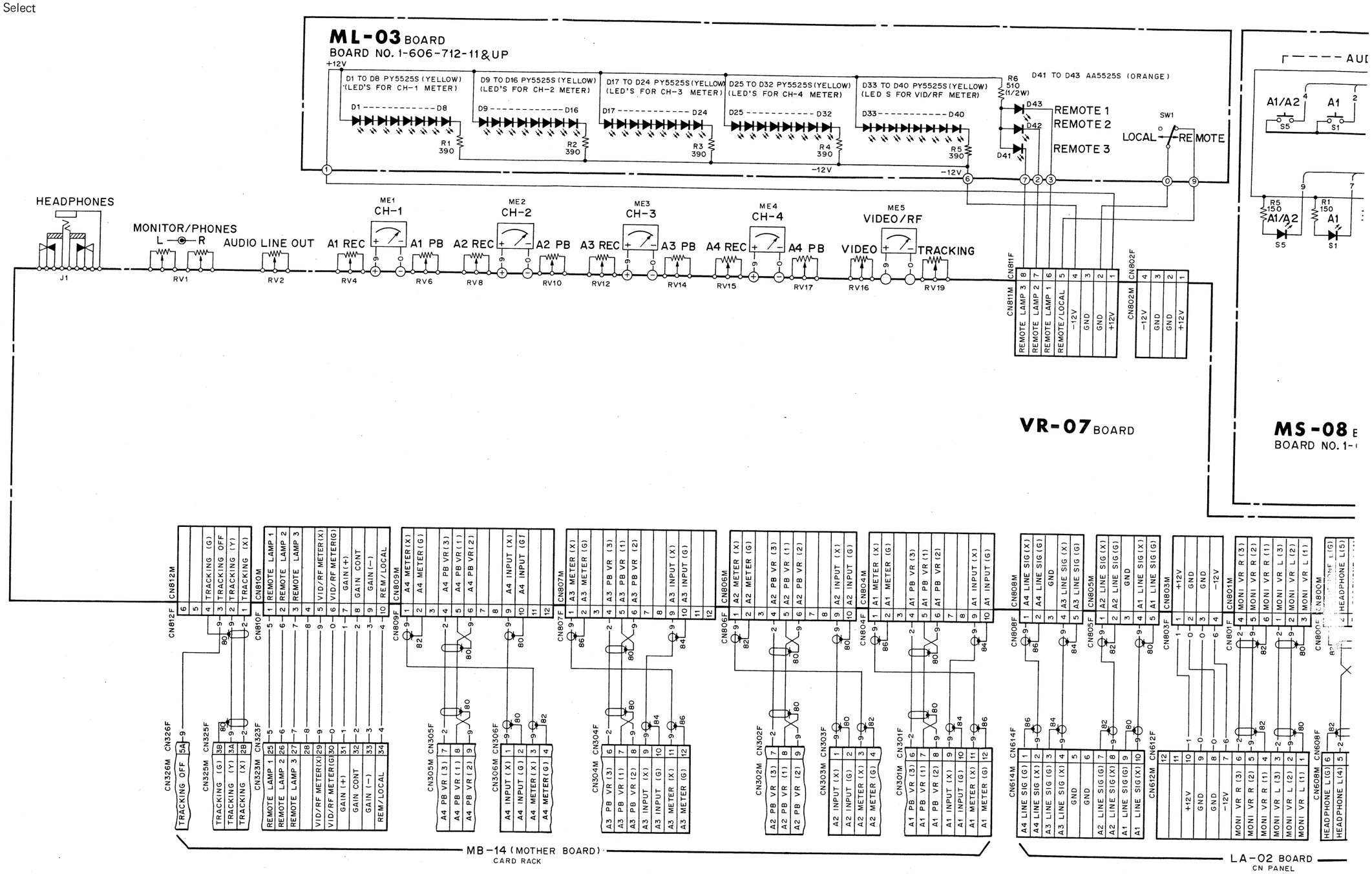

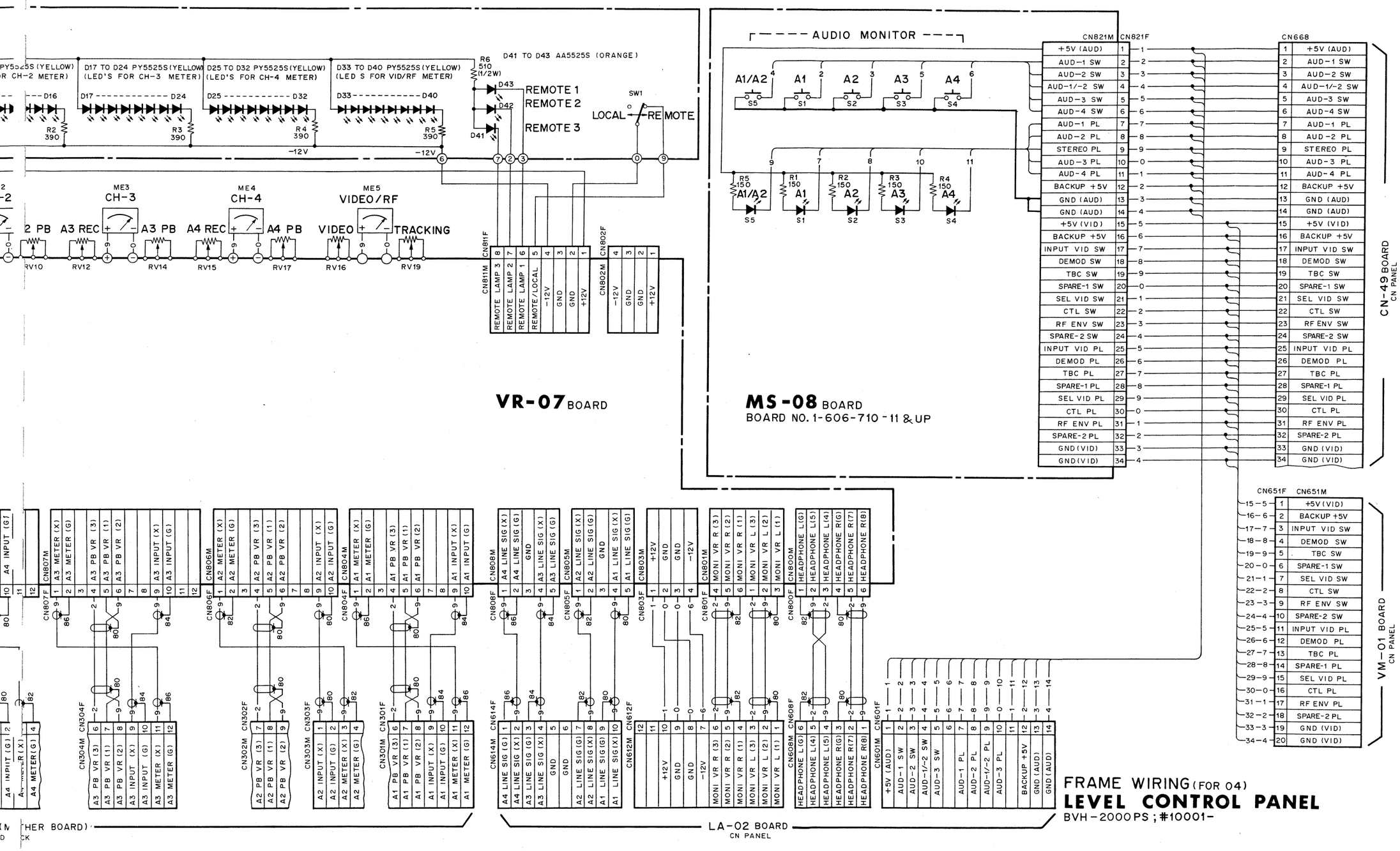

FRAME WIRING (FOR 04)

LEVEL CONTROL PANEL

BVH-2000PS ; #10001-

AC-39 BOARD (1-607-587-13)

Solder Side

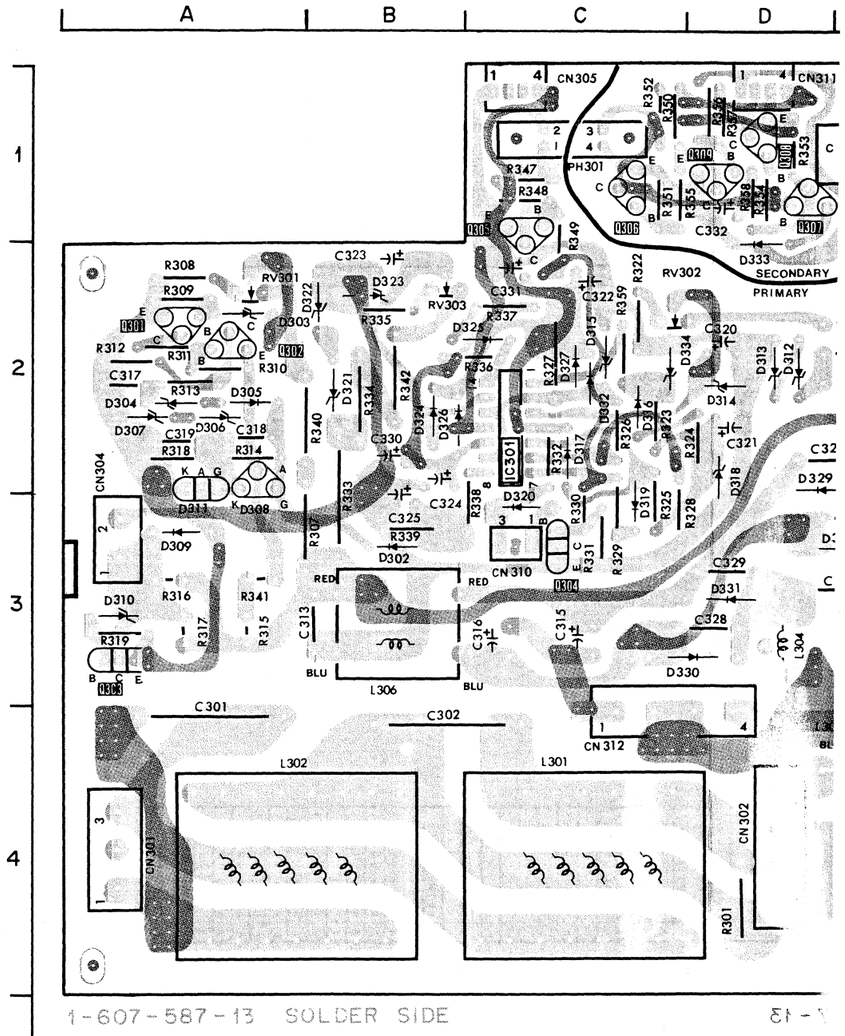

1-607-587-13 SOLDER SIDE

AC-39 BOARD (1-607-587-13)

Solder Side

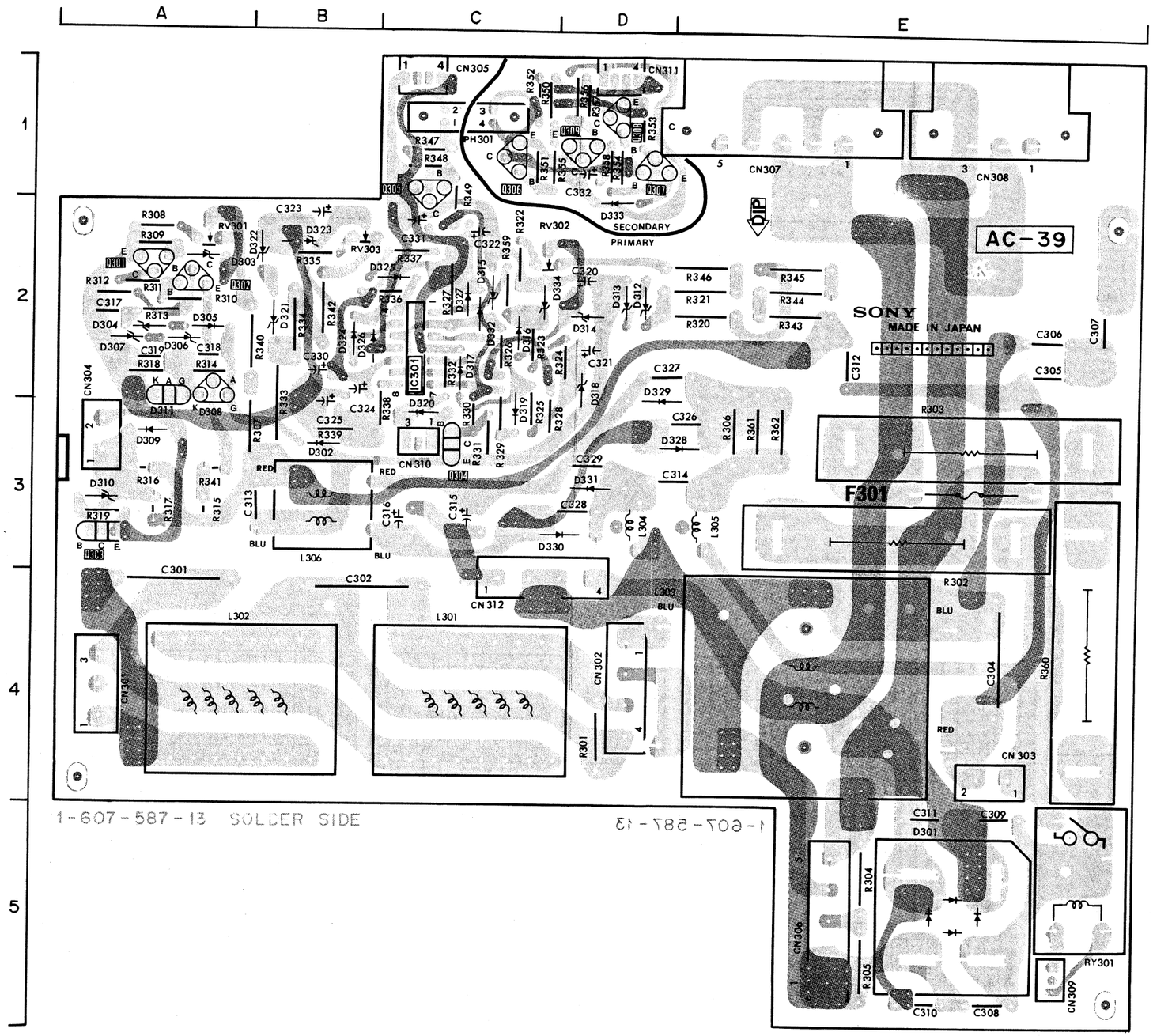

AC-39 (1-607-587-13 & UP)

BVH-2000(J,U/C)
BVH-2000PS
BVH-2000PM
BVH-2500(J,U/C)

CN301F 4A
CN302F 4D
CN303M 4E
CN304F 3A
CN305M 1C
CN306M 5E
CN307M 1E
CN308M 1E
CN309M 5E
CN310M 3C
CN311M 1D
CN312M 4C

D301 5E
D302 3B
D303 2A
D304 2A
D305 2A
D306 2A
D307 2A
D308 2A
D309 3A
D310 3A
D311 2A
D312 2D
D313 2D
D314 2D
D315 2C
D316 2C
D317 2C
D318 2D
D319 3C
D320 3C
D321 2B
D322 2B
D323 2B
D324 2B
D325 2C
D326 2B
D327 2C
D328 3E
D329 2D
D330 3D
D331 3D
D332 2C
D333 2D
D334 2C

IC301 2C

PH301 1C

Q301 2A
Q302 2A
Q303 3A
Q304 3C
Q305 1C
Q306 1C
Q307 1D
Q308 1D
Q309 1D

RV301 2A
RV302 2C
RV303 2B

RY301 5E

AC-39 BOARD

Primary Rectifier

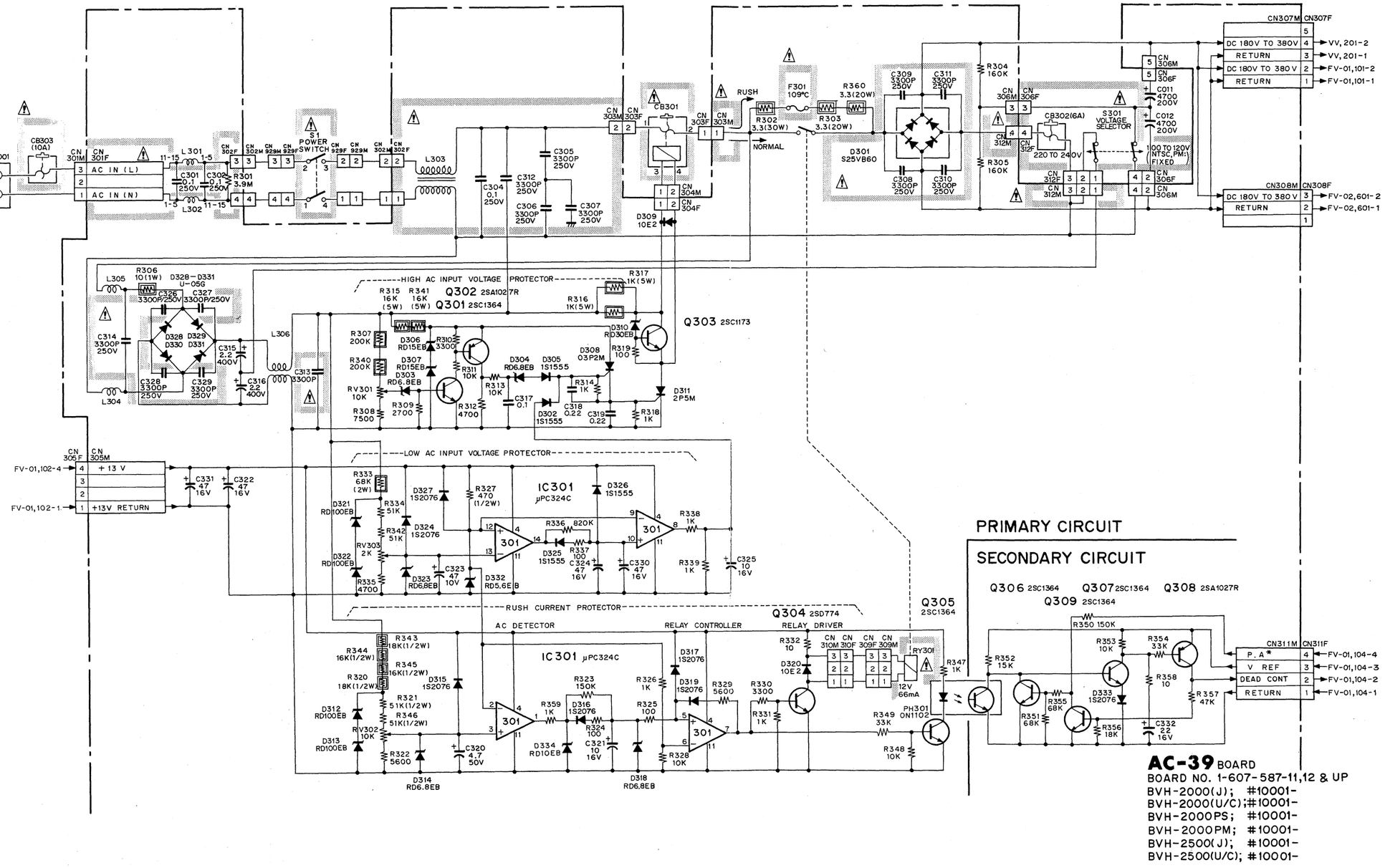

AC-39 BOARD
BOARD NO. 1-607-587-11,12 & UP
BVH-2000(J); #10001-
BVH-2000(U/C);#10001-
BVH-2000PS; #10001-
BVH-2000PM; #10001-
BVH-2500(J); #10001-
BVH-2500(U/C); #10001-

CT-36-2 BOARD
(1-607-591-23)
Solder Side

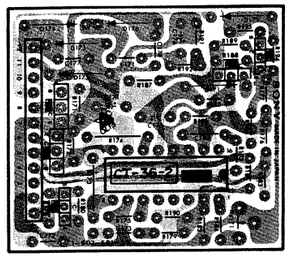

1-607-591-23
SOLDER SIDE

CT-36-3 BOARD
(1-607-591-33)
Solder Side

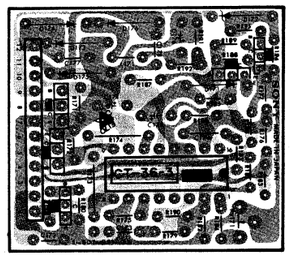

1-607-591-33
SOLDER SIDE

FV-03 BOARD
(1-607-597-14)
Solder Side

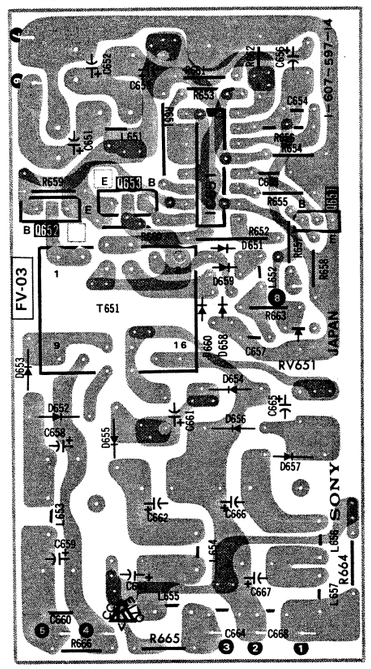

1-607-597-14
COMPONENT SIDE

1-607-597-14
SOLDER SIDE

FV-02 BOARD
(1-607-590-12)
Solder Side

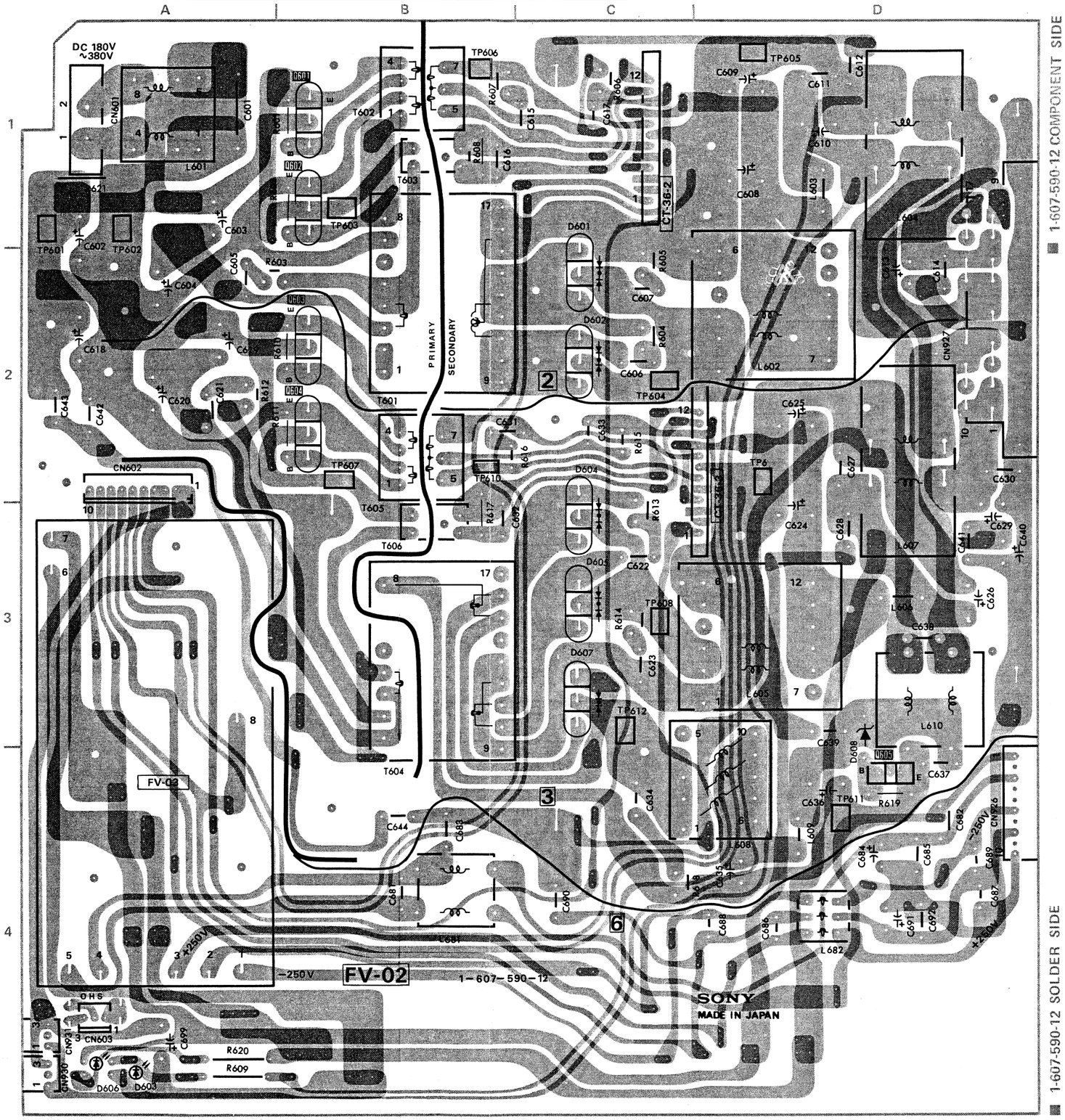

1-607-590-12 COMPONENT SIDE

FV-02 (1-607-590-11 & UP)

BVH-2000(J,U/C)
BVH-2000PS
BVH-2000PM
BVH-2500(J,U/C)

CN601M 1A
CN602M 2A
CN603M 4A
CN926M 4D
CN927M 2D
CN930M 4A
CN931M 4A

D601 2C
D602 2C
D603 4A
D604 3C
D605 3C
D606 4A
D607 3C
D608 3D

Q601 1B
Q602 1B
Q603 2B
Q604 2B
Q605 4D

S601 4C
S602 4C

TP601 1A
TP602 1A
TP603 1B
TP604 2C
TP605 1D
TP606 1B
TP607 2B
TP608 3C
TP609 2D
TP610 2B
TP611 4D
TP612 3C

L603,606

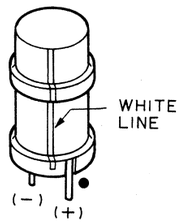

1-607-590-12 SOLDER SIDE

FV-02 BOARD

Switching Regulator

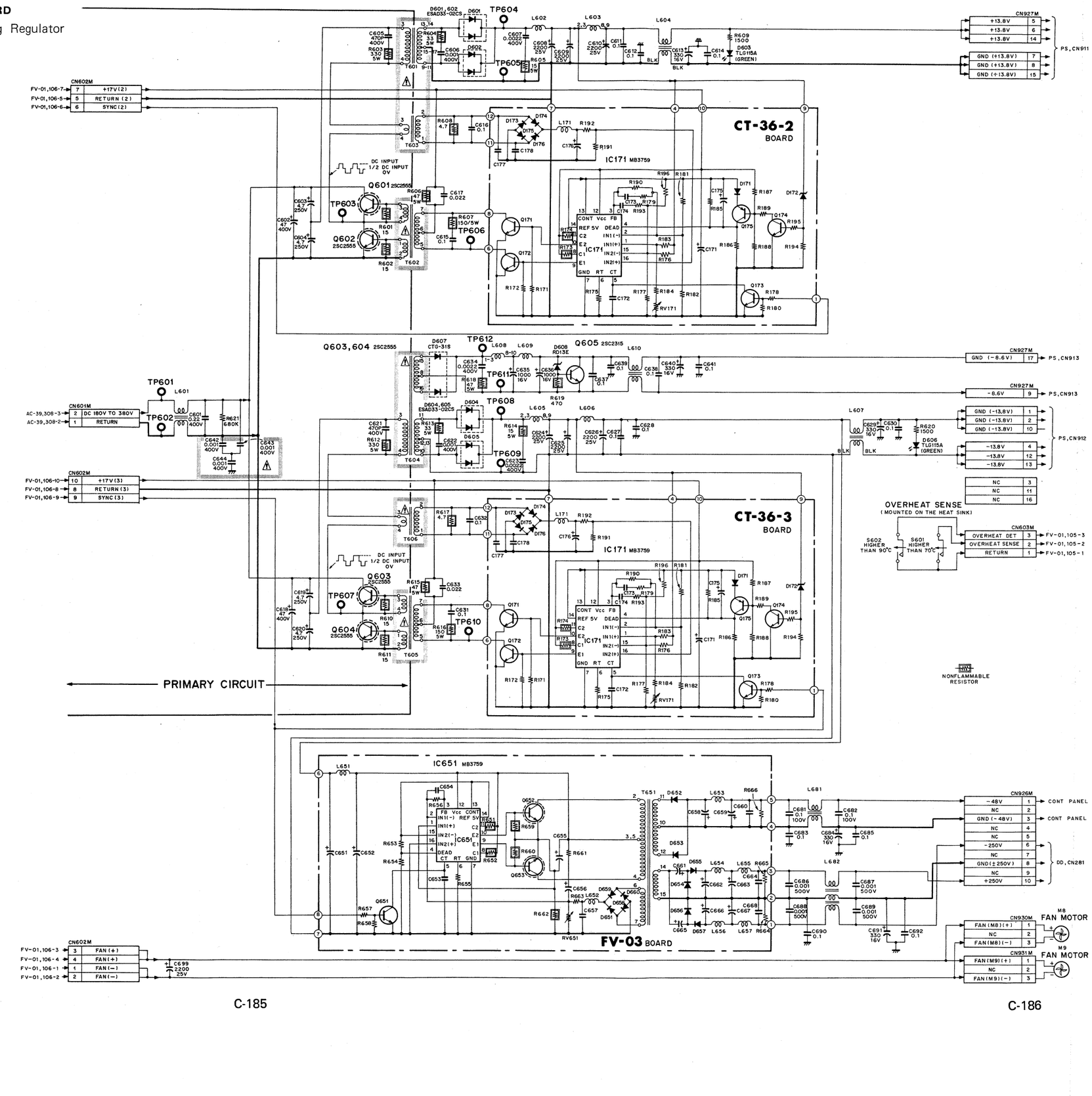

FV-02 BOARD
BOARD NO. 1-607-590-11 & UP
BVH-2000(J); #10001-
BVH-2000(U/C); #10001-
BVH-2000PS; #10001-
BVH-2000PM; #10001-
BVH-2500(J); #10001-
BVH-2500(U/C); #10001-

CT-36-7 BOARD
(1-607-591-53)
Solder Side

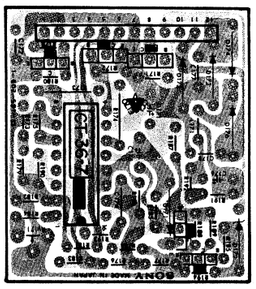

1-607-591-53
SOLDER SIDE

VV-01 BOARD
(1-607-589-13)
Solder Side

CT-37 BOARD
(1-607-592-13)
Solder Side

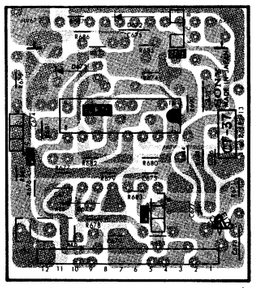

1-607-592-13
SOLDER SIDE

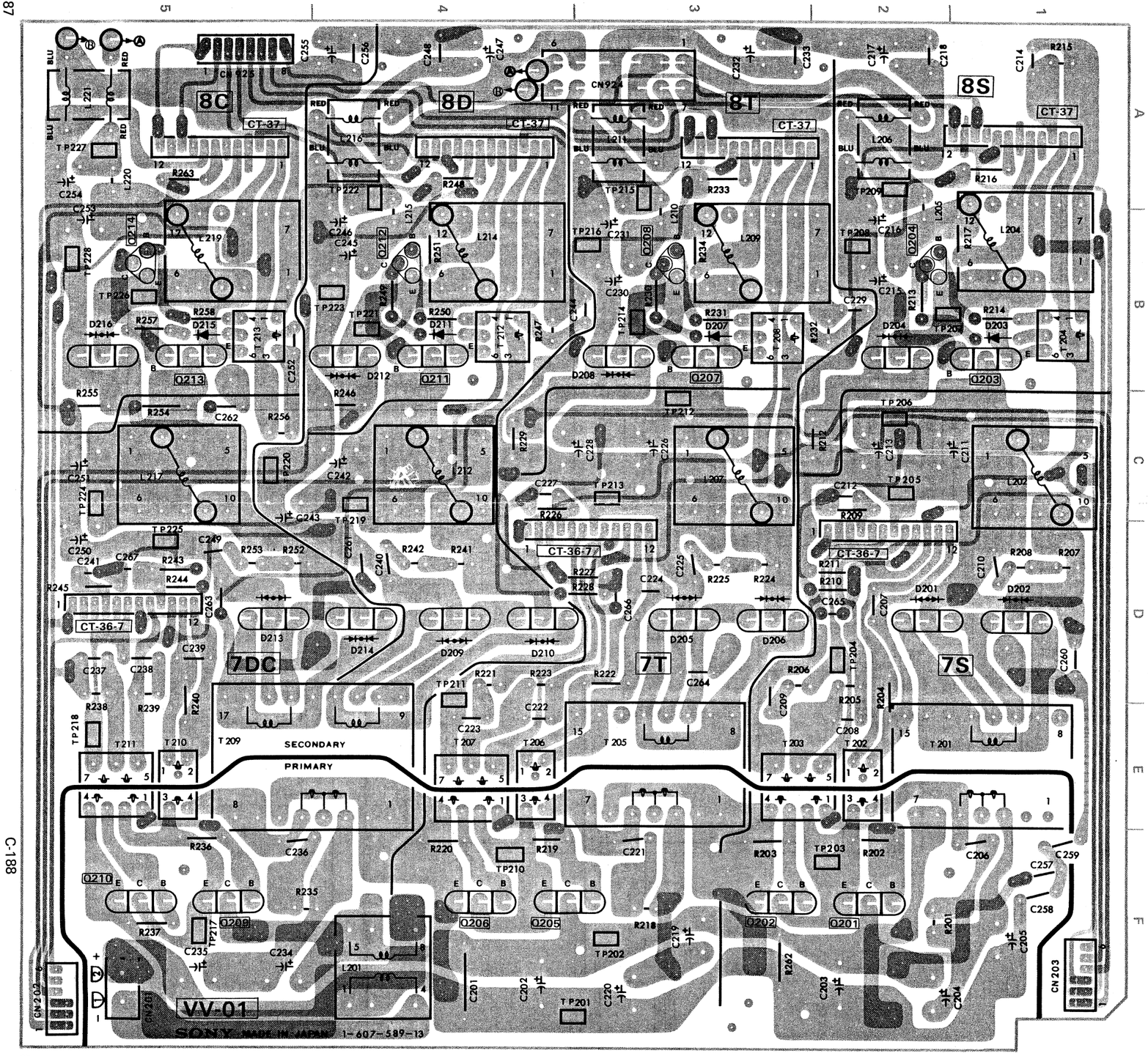

■ 1-607-589-13 SOLDER SIDE

■ 1-607-589-13 COMPONENT SIDE

D201	2D	
D202	1D	
D203	1B	
D204	2B	
D205	3D	
D206	3D	
D207	3B	
D208	3B	
D209	4D	
D210	4D	
D211	4B	
D212	4B	
D213	5D	
D214	4D	
D215	5B	
D216	5B	
Q201	2F	
Q202	3F	
Q203	1B	
Q204	1B	
Q205	3F	
Q206	4F	
Q207	3B	
Q208	3B	
Q209	5F	
Q210	5F	
Q211	4B	
Q212	4B	
Q213	5B	
Q214	5B	
TP201	3F	
TP202	3F	
TP203	2F	
TP204	2D	
TP205	2C	
TP206	2C	
TP207	2B	
TP208	2B	
TP209	2A	
TP210	4F	
TP211	4D	
TP212	3C	
TP213	3C	
TP214	3C	
TP215	3A	
TP216	3B	
TP217	5F	
TP218	5E	
TP219	4C	
TP220	5C	
TP221	4B	
TP222	4A	
TP223	4B	
TP224	4C	
TP225	5C	
TP226	5B	
TP227	5A	
TP228	5B	
CN201M	5F	
CN202M	5F	
CN203M	1F	
CN924M	3A	
CN925M	5A	

VV-01 (1-607-589-12 & up)
BVH-2000(J,J/C)
BVH-2000PS
BVH-2000PM
BVH-2500(J,J/C)

VV-01 BOARD ; Switching Regulator

POWER SUPPLY **VV-01** **VV-01** POWER SUPPLY

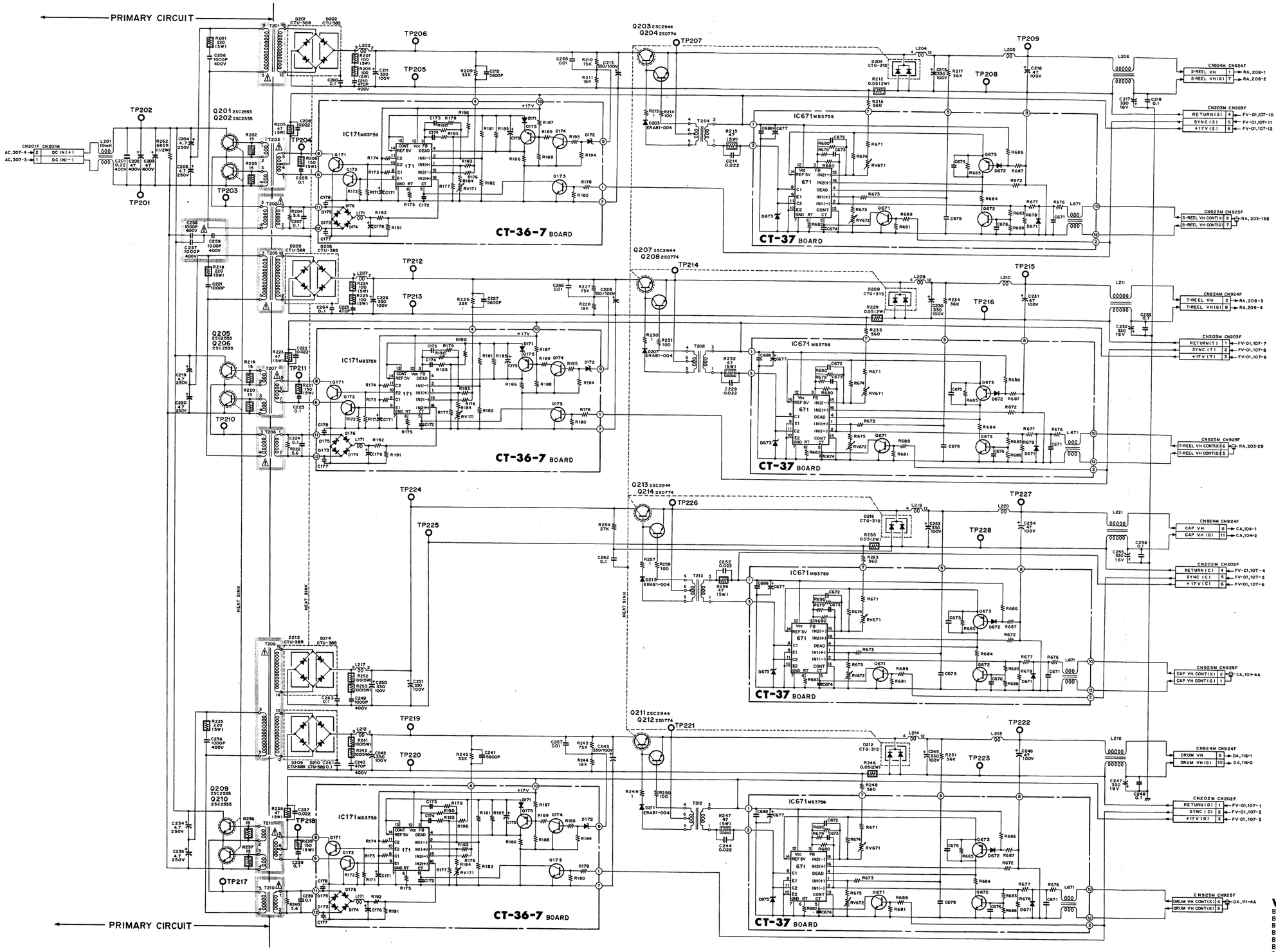

VV-01 BOARD
BOARD NO. 1-607-589-11 & UP
BVH-2000(J); #10001-
BVH-2000(U/C); #10001-
BVH-2000PS; #10001-
BVH-2000PM; #10001-
BVH-2500(J); #10001-
BVH-2500(U/C); #10001-

PA-19 BOARD
(1-607-594-14)

Solder Side

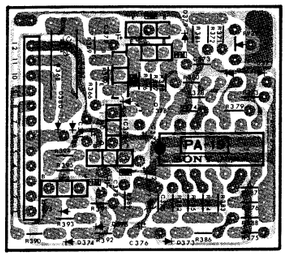

1-607-594-14
SOLDER SIDE
1-607-594-14

CT-38 BOARD
(1-607-593-13)

Solder Side

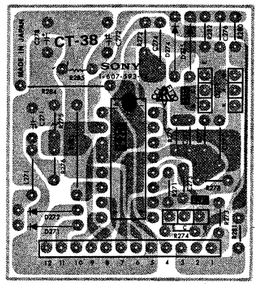

■ 1-607-593-13
SOLDER SIDE
■ 1-607-593-13
COMPONENT SIDE

ST-21 BOARD
(1-607-595-13)

Solder Side

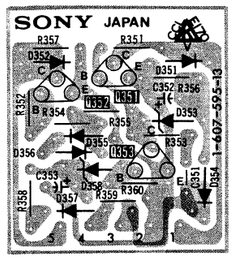

■ 1-607-595-13
SOLDER SIDE
■ 1-607-595-13
COMPONENT SIDE

L103,104

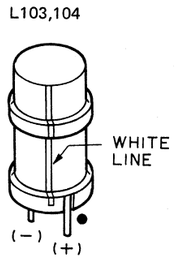

CT-36-1 BOARD
(1-607-591-13)

Solder Side

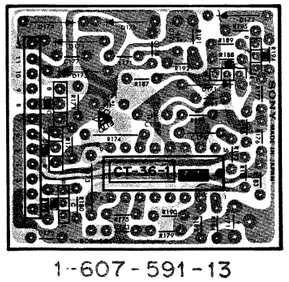

1-607-591-13
SOLDER SIDE
1-607-591-13

CT-36-4 BOARD
(1-607-591-43)

Solder Side

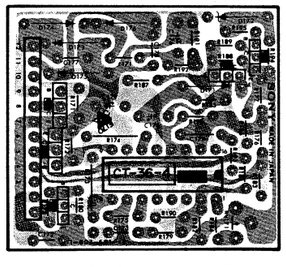

1-607-591-43
SOLDER SIDE
1-607-591-43

FV-01 BOARD
(1-607-588-12)

Solder Side

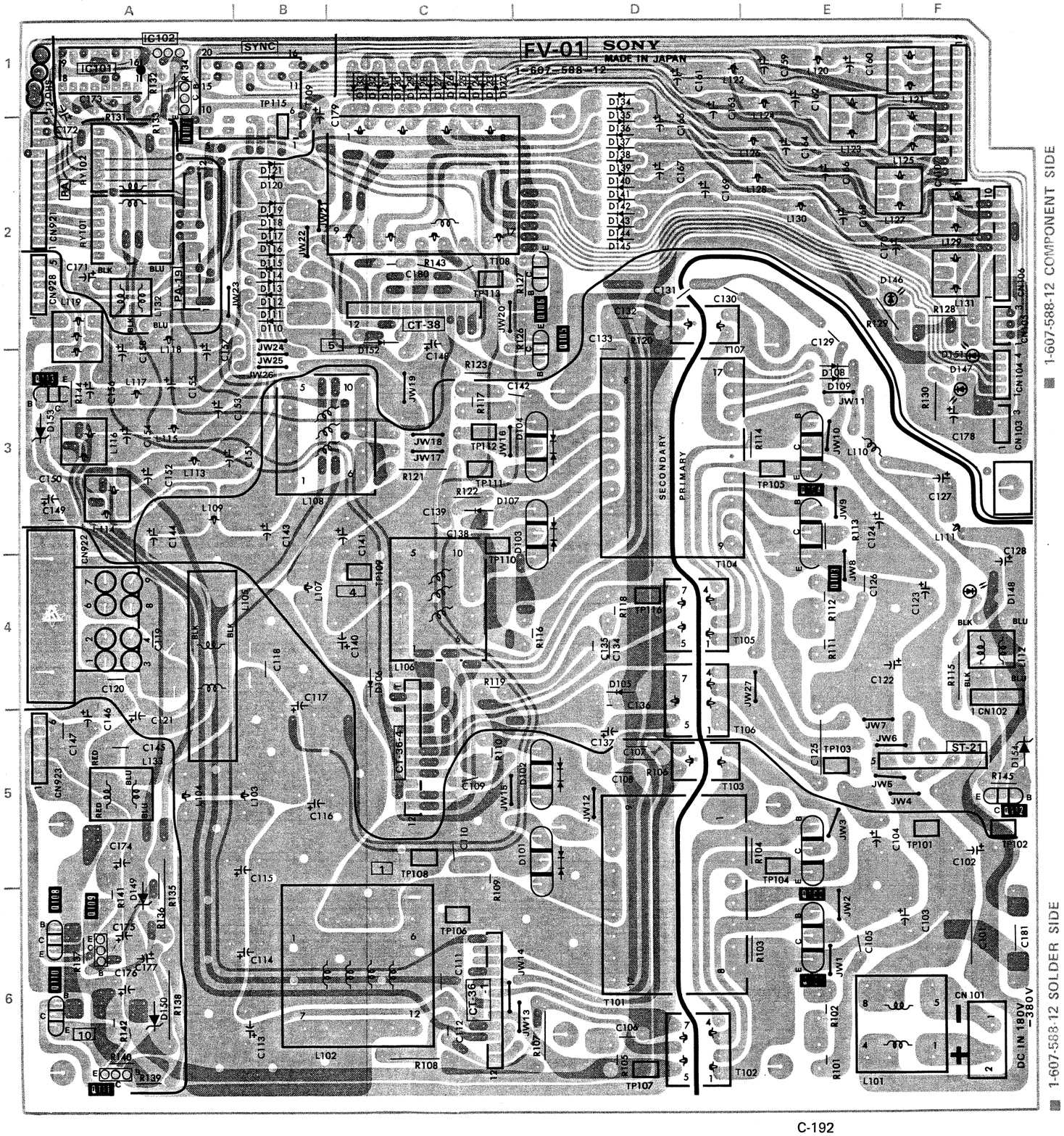

FV-01 (1-607-588-11 & UP)

BVH-2000(J,U/C)
BVH-2000PS
BVH-2000PM
BVH-2500(J,U/C)

CN101M 6F
CN102M 4F
CN103M 3F
CN104M 3F
CN105M 2F
CN106M 2F
CN107M 2F
CN921M 2A
CN922F 4A
CN923M 5A
CN928M 2A

D101 5D
D102 5D
D103 3D
D104 3D
D105 4D
D106 4C
D107 3C
D108 3E
D109 3E
D110 2B
D111 2B
D112 2B
D113 2B
D114 2B
D115 2B
D116 2B
D117 2B
D118 2B
D119 2B
D120 2B
D121 2B
D122 1C
D123 1C
D124 1C
D125 1C
D126 1C
D127 1C
D128 1C
D129 1C
D130 1C
D131 1C
D132 1C
D133 1C
D134 1D
D135 1D
D136 2D
D137 2D
D138 2D
D139 2D
D140 2D
D141 2D
D142 2D
D143 2D
D144 2D
D145 2D
D146 2E
D147 3F
D148 4F
D149 6A
D150 6A
D151 3F
D152 2C
D153 3A
D154 5F

IC101 1A
IC102 1A

Q101 6E
Q102 5E
Q103 3E
Q104 3E
Q105 2D
Q106 2D
Q107 1A
Q108 6A
Q109 6A
Q110 6A
Q111 6A
Q112 5F
Q113 3A

RY101 2A
RY102 2A

S101 4D
S102 6D

TP101 5F
TP102 5F
TP103 5E
TP104 5E
TP105 3E
TP106 6C
TP107 6D
TP108 5C
TP109 4C
TP110 3C
TP111 3C
TP112 3C
TP113 2C
TP115 2B
TP116 4D

FV-01 BOARD

Switching Regulator

PRIMARY CIRCUIT

CT-36-1 BOARD

CT-36-4 BOARD

CT-38 BOARD

ST-21 BOARD

PA-19 BOARD

IC171 MB3759

IC271 MB3759

IC371 μPC78L12

IC372 μPC339C

IC101 TC4528BP

IC102 μPC78L05A

Q101 2SC2555

Q102 2SC2555

Q103 2SC2555

Q104 2SC2555

Q105,106 2SC2654

Q107 2SC1364

Q112 2SC1173

Q113 2SC1173

Q108 2SC2315

Q110 2SC2315

Q109 2SC2785

Q111 2SC2785

CN101M
2	DC 180 TO 380V
1	RETURN

CN105M
3	OVERHEAT DET
2	OVERHEAT SENSE
1	RETURN

CN104M
2	DEAD CONT

CN102M
4	+13V
3	+13V
2	+13V RETURN
1	+13V RETURN

CN922F
+6.8V	1
+6.8V	2
+6.8V	3
+6.8V	4
NC	5
GND(+6.8V)	6
GND(+6.8V)	7
GND(+6.8V)	8
GND(+6.8V)	9

CN104M
P.A*	4

CN921M
P-A COM	8
P-A 4	4
P-A 3	3
P-A 2	2
P-A 1	1
P-A 7	7
P-A 6	6
P-A 5	5
P.D.S	11
P.D.S(COM)	12
OVERHEAT(X)	9
OVERHEAT(Y)	10

CN104M
REF VOLT	3
RETURN	1

CN106M
+17V (2)	7
SYNC (2)	6
RETURN (2)	5

CN107M
+17V (3)	10
SYNC (3)	9
RETURN (3)	8
+17V (S)	12
SYNC (S)	11
RETURN (S)	10
+17V (T)	9
SYNC (T)	8
RETURN (T)	7
+17V (C)	6
SYNC (C)	5
RETURN (C)	4
+17V (D)	3
SYNC (D)	2
RETURN (D)	1

CN928M
+19V	1
NC	2
RETURN	3
NC	4
-19V	5

CN923M
+13V(SOL)	1
+13V(SOL)	2
GND(SOL)	3
GND(SOL)	4
FAN(M7)(+)	5
FAN(M7)(-)	6

CN103M
FAN(Y)	1
FAN(Y)	2
FAN(X)	3

CN106M
FAN(-)	1
FAN(-)	2
FAN(+)	3
FAN(+)	4

FV-01 BOARD
BOARD NO. 1-607-588-11 & UP
BVH-2000(J); #10001-
BVH-2000(U/C); #10001-
BVH-2000PS; #10001-
BVH-2000PM; #10001-
BVH-2500(J); #10001-
BVH-2500(U/C); #10001-

NONFLAMMABLE RESISTOR

PS-14 BOARD (1-606-716-11)

Component Side

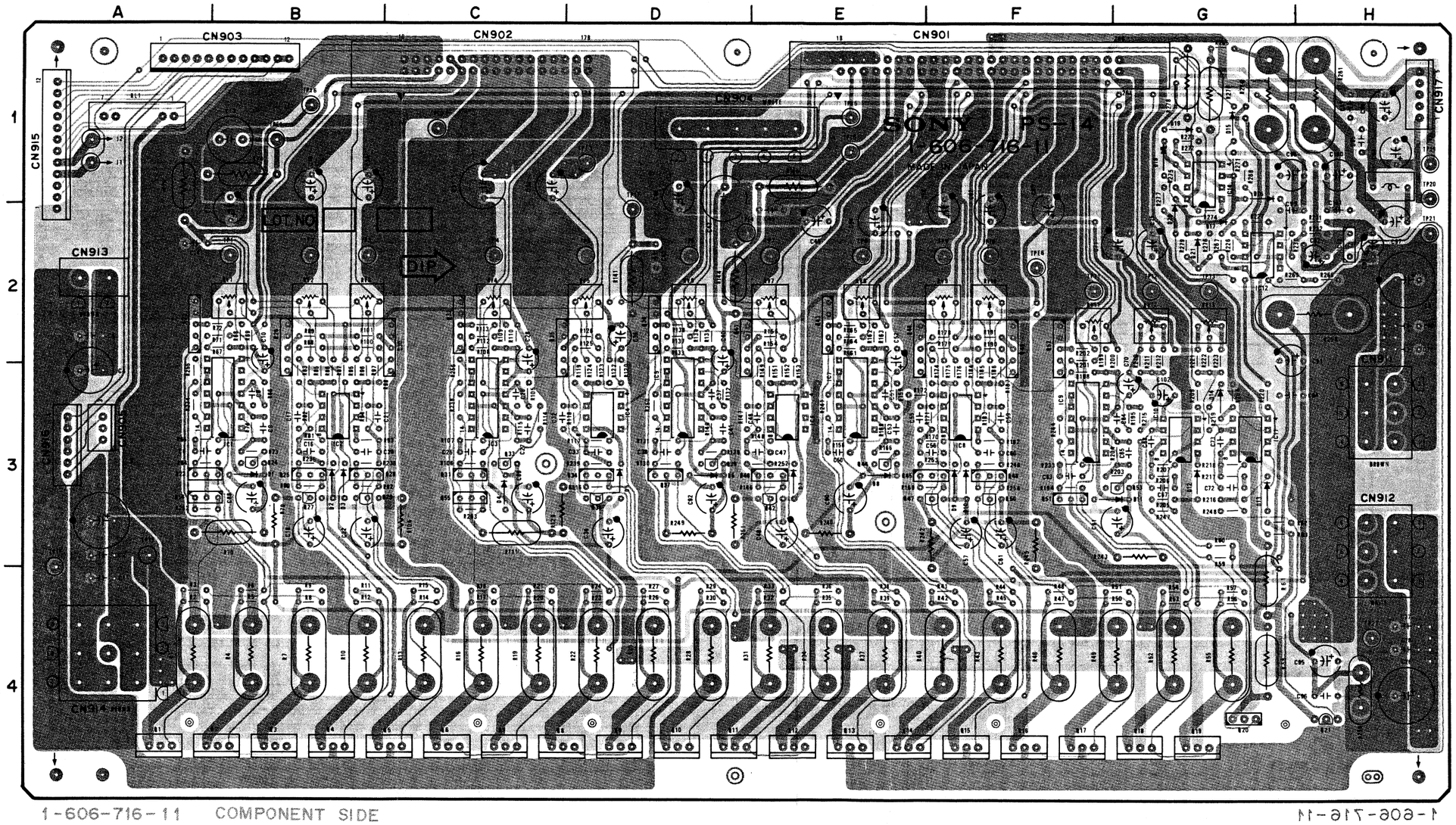

PS-14 (1-606-716-11)

BVH-2000(J,U/C)
BVH-2000PS

D1	3B		Q32	2C	
D2	3B		Q33	3C	
D3	3B		Q34	3D	
D4	3C		Q35	2C	
D5	3D		Q36	3D	
D6	3D		Q37	3D	
D7	3E		Q38	2D	
D8	3E		Q39	3D	
D9	3F		Q40	3E	
D10	3F		Q41	2D	
D11	3G		Q42	3E	
D12	3G		Q43	2E	
D13	3G		Q44	3E	
D14	3G		Q45	3F	
D15	1G		Q46	2E	
D16	1G		Q47	3F	
D17	2G		Q48	3F	
D18	1G		Q49	2F	
D19	1G		Q50	3F	
D20	2G		Q51	3F	
D21	2G		Q52	2F	
			Q53	3F	
IC1	3B		Q54	3A	
IC2	3B		Q55	3C	
IC3	3C				
IC4	3D		RL1	1A	
IC5	3D				
IC6	3E		RV1	2B	
IC7	3E		RV2	2B	
IC8	3F		RV3	2B	
IC9	3F		RV4	2C	
IC10	3G		RV5	2D	
IC11	3G		RV6	2D	
IC12	2G		RV7	2E	
IC13	2H		RV8	2E	
IC14	1G		RV9	2F	
			RV10	2F	
Q1	4A		RV11	2F	
Q2	4B		RV12	2G	
Q3	4B		RV13	2G	
Q4	4B				
Q5	4C		TP1	2B	
Q6	4C		TP2	2B	
Q7	4C		TP3	2B	
Q8	4C		TP4	2C	
Q9	4D		TP5	2D	
Q10	4D		TP6	2D	
Q11	4D		TP7	2E	
Q12	4E		TP8	2E	
Q13	4E		TP9	2F	
Q14	4E		TP10	2F	
Q15	4F		TP11	2F	
Q16	4F		TP12	2G	
Q17	4F		TP13	2G	
Q18	4G		TP14	4A	
Q19	4G		TP15	3A	
Q20	4G		TP16	1B	
Q21	4H		TP17	2D	
Q22	3A		TP18	1E	
Q23	2A		TP19	1H	
Q24	3B		TP20	1H	
Q25	3B		TP21	2H	
Q26	2B		TP22	4H	
Q27	3B				
Q28	3B		TPE1	1B	
Q29	3B		TPE2	1C	
Q30	2C		TPE3	1D	
Q31	3C		TPE4	2D	
			TPE5	1E	
			TPE6	2F	

PS-14 BOARD (1/2)

Series Regulator

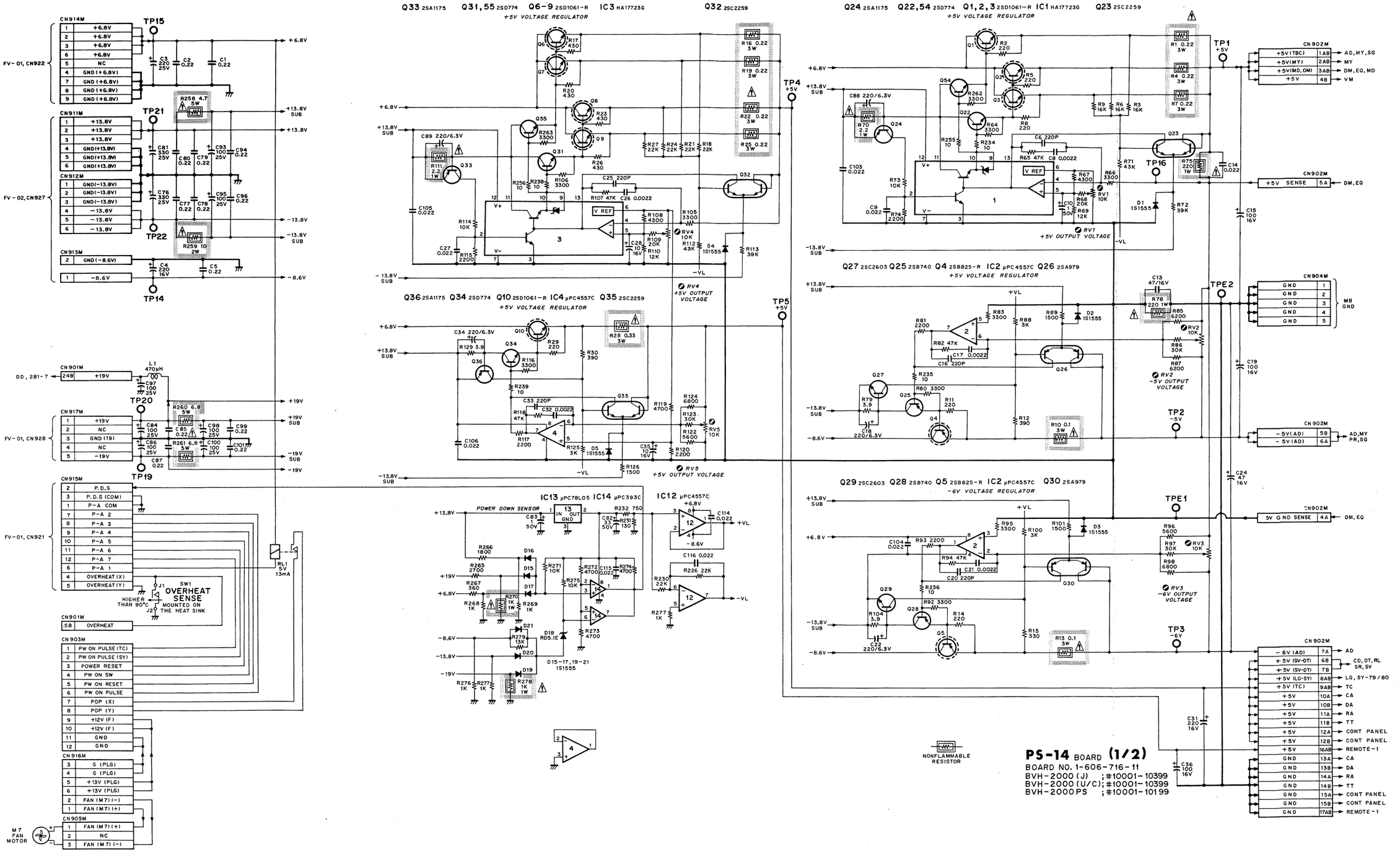

PS-14 BOARD (1/2)
BOARD NO. 1-606-716-11
BVH-2000 (J) ; #10001-10399
BVH-2000 (U/C); #10001-10399
BVH-2000PS ; #10001-10199

PS-14 BOARD (2/2)

Series Regulator

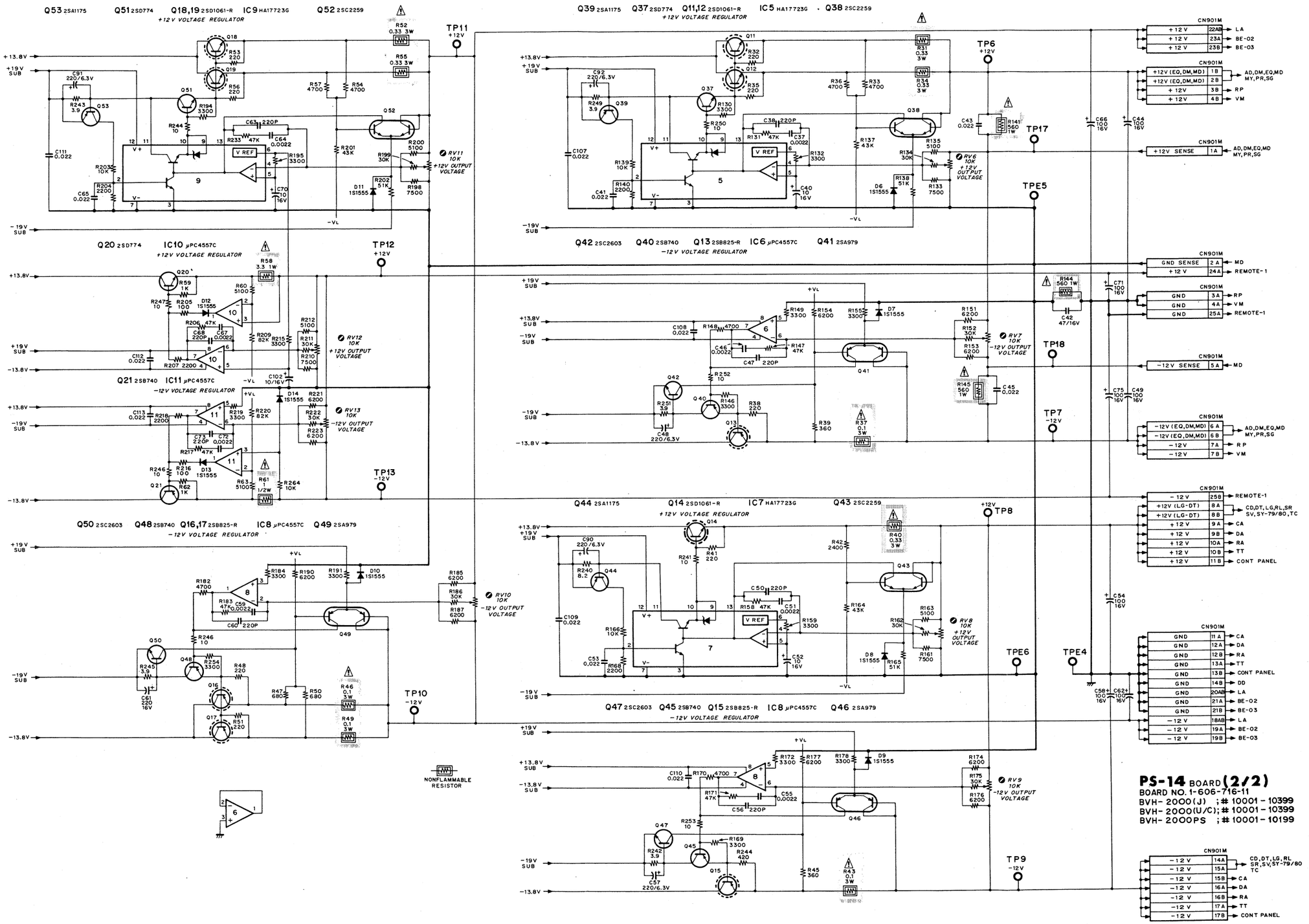

C-198(4/9)

C-198(5/9)

PS-14 BOARD (1-606-716-13)

Component Side

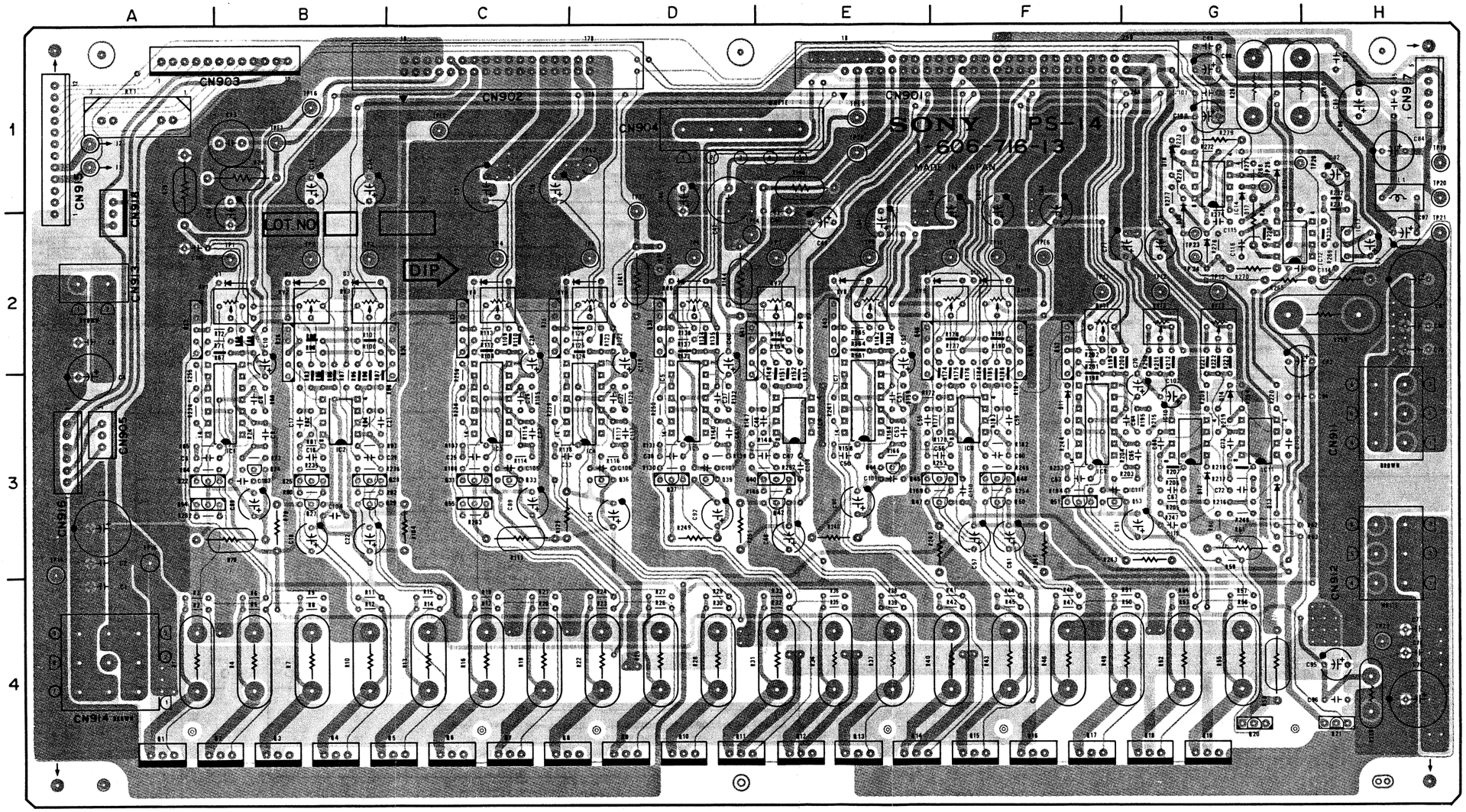

1-606-716-13 COMPONENT SIDE

1-606-716-13

PS-14 (1-606-716-13 & UP)

BVH-2000(J,U/C)		Q20	4G
BVH-2000PS		Q21	4H
BVH-2000PM		Q22	3A
BVH-2500(J,U/C)		Q23	2A
		Q24	3B
CN901M		Q25	3B
	1F	Q26	2B
CN902M		Q27	3B
	1C	Q28	3B
CN903M		Q29	3B
	1B	Q30	2C
CN904M		Q31	3C
	1D	Q32	2C
CN905M		Q33	3C
	3A	Q35	2C
CN911M		Q36	3D
	3H	Q37	3D
CN912M		Q38	2D
	3H	Q39	3D
CN913M		Q40	3E
	2A	Q41	2D
CN914M		Q42	3E
	4A	Q43	2E
CN915M		Q44	3E
	1A	Q45	3F
CN916M		Q46	2E
	3A	Q47	3F
CN917M		Q48	3F
	1H	Q49	2F
		Q50	3F
D1	2B	Q51	3F
D2	2B	Q52	2F
D3	2B	Q53	3F
D4	2C	Q54	3A
D5	2D	Q55	3C
D6	2D		
D7	2E	RY1	1A
D8	2E		
D9	2F	RV1	2B
D10	2F	RV2	2B
D11	3F	RV3	2B
D12	3G	RV4	2C
D13	3G	RV5	2D
D14	3G	RV6	2D
D15	1G	RV7	2E
D17	1G	RV8	2E
D18	1G	RV9	2F
D20	1G	RV10	2F
D21	2G	RV11	2F
		RV12	2G
IC1	3B	RV13	2G
IC2	3B		
IC3	3C	TP1	2B
IC4	3D	TP2	2B
IC5	3D	TP3	2B
IC6	3E	TP4	2C
IC7	3E	TP5	2D
IC8	3F	TP6	2D
IC9	3F	TP7	2E
IC10	3G	TP8	2E
IC11	3G	TP9	2F
IC12	2H	TP10	2F
IC13	2H	TP11	2F
IC14	1G	TP12	2G
		TP13	2G
Q1	4A	TP14	3A
Q2	4B	TP15	3A
Q3	4B	TP16	1B
Q4	4B	TP17	2D
Q5	4C	TP18	1E
Q6	4C	TP19	1H
Q7	4C	TP20	1H
Q8	4C	TP21	2H
Q9	4D	TP22	4H
Q10	4D		
Q11	4D	TPE1	1B
Q12	4E	TPE2	1C
Q13	4E	TPE3	1D
Q14	4E	TPE4	2D
Q15	4F	TPE5	1E
Q16	4F	TPE6	2F
Q17	4F		
Q18	4G		
Q19	4G		

PS-14 BOARD (1/2)

Series Regulator

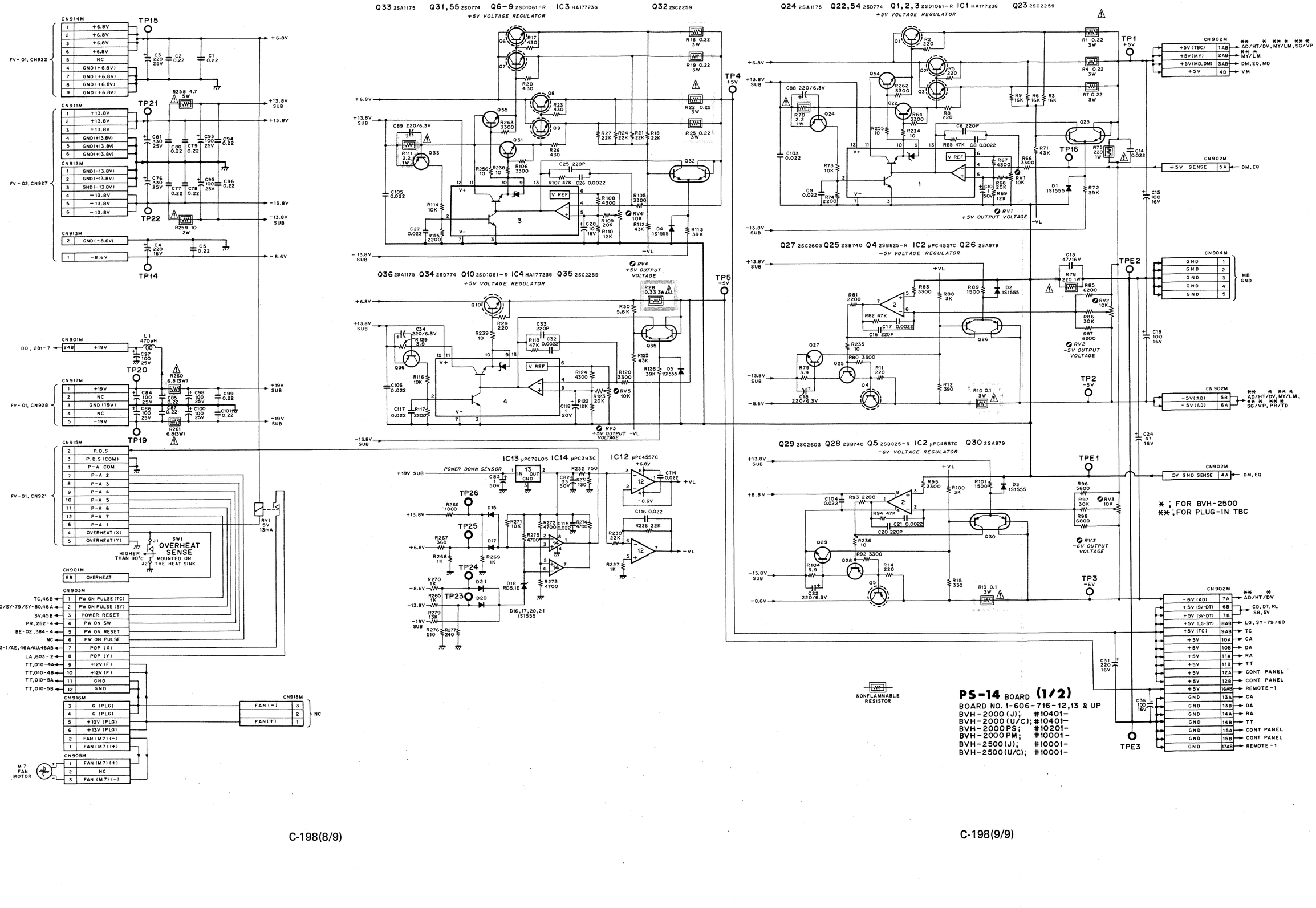

C-198(8/9) C-198(9/9)

BVH-2500 C-233 C-234

PS-14 BOARD (2/2)

Series Regulator

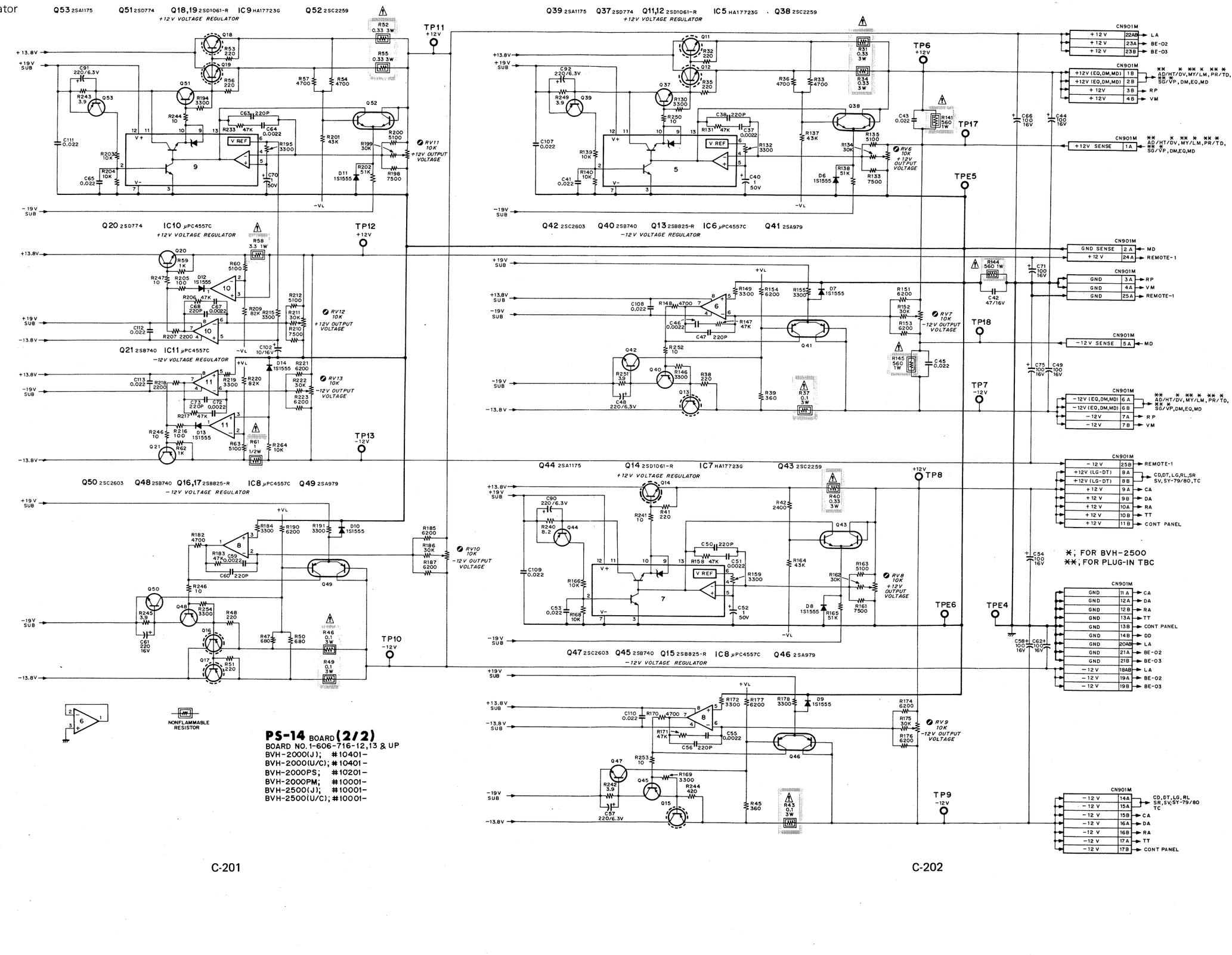

PS-14 BOARD (2/2)

BOARD NO. 1-606-716-12,13 & UP
BVH-2000(J); #10401-
BVH-2000(U/C); #10401-
BVH-2000PS; #10201-
BVH-2000PM; #10001-
BVH-2500(J); #10001-
BVH-2500(U/C); #10001-

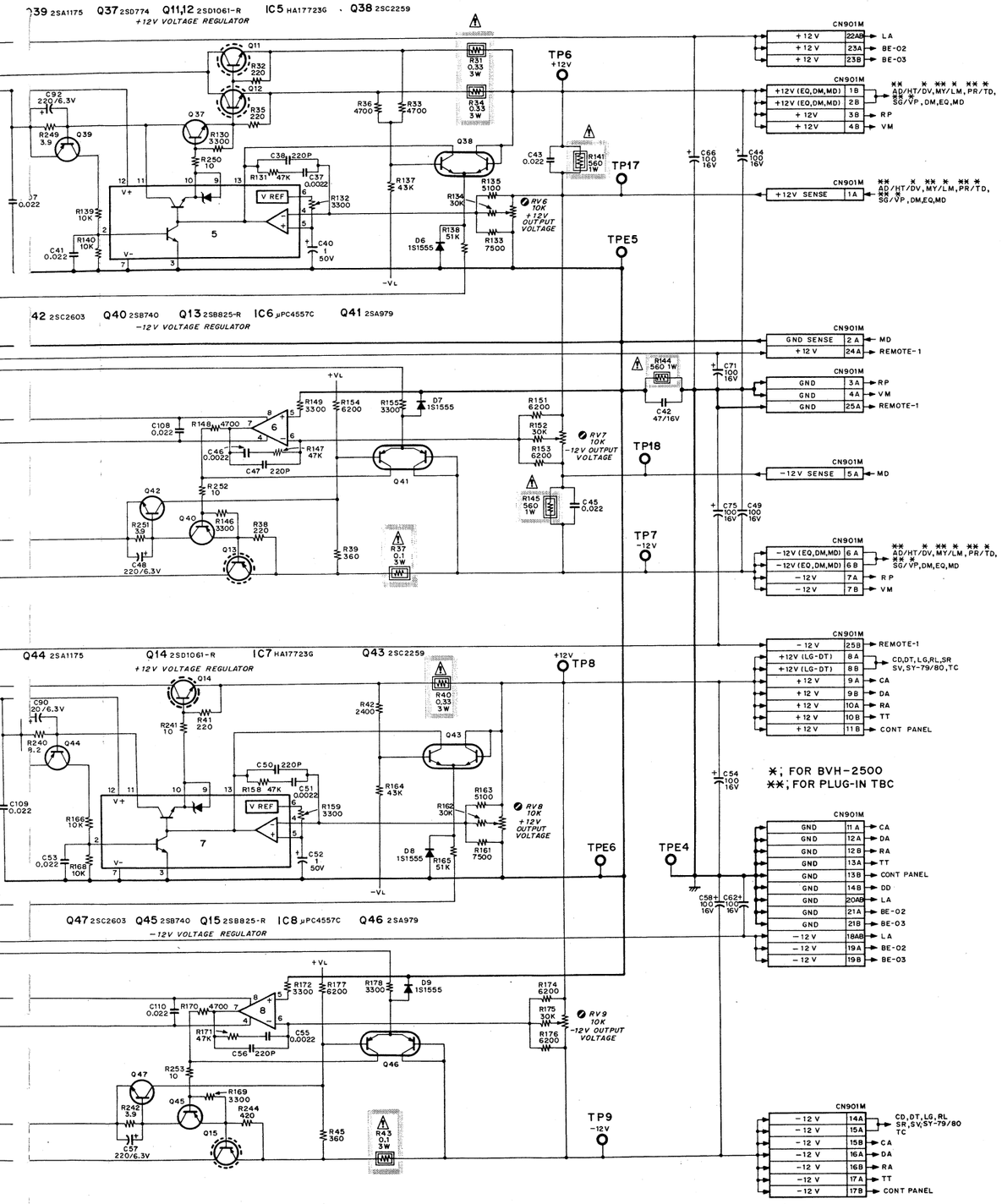
Q39 2SA1175 Q37 2SD774 Q11,12 2SD1061-R IC5 HA17723G Q38 2SC2259
+12V VOLTAGE REGULATOR
Q11
Q12
Q37
Q38
Q39
R32 220
R35 220
R130 300
R250 10
R249 3.9
C92 220/6.3V
R36 4700
R33 4700
R31 0.33 3W
R34 0.33 3W
C38 220P
R131 47K
C37 0.0022
R137 43K
R135 5100
R134 30K
RV6 10K +12V OUTPUT VOLTAGE
R132 3300
R139 10K
R140 10K
C41 0.022
C40 1 50V
R138 51K
D6 1S1555
R133 7500
V REF
V+
V-
C43 0.022
R141 560 1W
TP6 +12V
TP17
TPE5
C66 100 16V
C44 100 16V
-VL
CN901M
+12V 22AB LA
+12V 23A BE-02
+12V 23B BE-03
+12V (EQ,DM,MD) 1B
+12V (EQ,DM,MD) 2B
+12V 3B RP
+12V 4B VM
** * ** * ** * AD/HT/DV,MY/LM,PR/TD, ** * SG/VP,DM,EQ,MD
+12V SENSE 1A
Q42 2SC2603 Q40 2SB740 Q13 2SB825-R IC6 μPC4557C Q41 2SA979
-12V VOLTAGE REGULATOR
GND SENSE 2A MD
+12V 24A REMOTE-1
GND 3A RP
GND 4A VM
GND 25A REMOTE-1
-12V SENSE 5A MD
-12V (EQ,DM,MD) 6A
-12V (EQ,DM,MD) 6B
-12V 7A RP
-12V 7B VM
-12V 25B REMOTE-1
+12V (LG-DT) 8A
+12V (LG-DT) 8B
CD,DT,LG,RL,SR SV,SY-79/80,TC
+12V 9A CA
+12V 9B DA
+12V 10A RA
+12V 10B TT
+12V 11B CONT PANEL
+VL
R149 3300
R154 6200
R155 3300
D7 1S1555
R144 560 1W
C71 100 16V
C42 47/16V
C108 0.022
R148 4700
C46 0.0022
R147 47K
C47 220P
R151 6200
R152 30K
R153 6200
RV7 10K -12V OUTPUT VOLTAGE
TP18
R145 560 1W
C45 0.022
C75 100 16V
C49 100 16V
TP7 -12V
R252 10
R251 3.3
R146 3300
R38 220
R39 360
R37 0.1 3W
C48 220/6.3V
Q44 2SA1175 Q14 2SD1061-R IC7 HA17723G Q43 2SC2259
+12V VOLTAGE REGULATOR
+12V TP8
Q14
Q43
Q44
C90 20/6.3V
R240 9.2
R241 10
R41 220
R42 2400
R40 0.33 3W
C50 220P
R158 47K
C51 0.0022
R159 3300
R164 43K
R163 5100
R162 30K
RV8 10K +12V OUTPUT VOLTAGE
R166 10K
R168 10K
C53 0.022
C52 1 50V
D8 1S1555
R165 51K
R161 7500
TPE6
TPE4
C54 100 16V
*; FOR BVH-2500
**; FOR PLUG-IN TBC
C58 100 16V
C62 100 16V
GND 11A CA
GND 12A DA
GND 12B RA
GND 13A TT
GND 13B CONT PANEL
GND 14B DD
GND 20AB LA
GND 21A BE-02
GND 21B BE-03
-12V 18AB LA
-12V 19A BE-02
-12V 19B BE-03
Q47 2SC2603 Q45 2SB740 Q15 2SB825-R IC8 μPC4557C Q46 2SA979
-12V VOLTAGE REGULATOR
+VL
R172 3300
R177 6200
R178 3300
D9 1S1555
R174 6200
R175 30K
R176 6200
RV9 10K -12V OUTPUT VOLTAGE
C110 0.022
R170 4700
R171 47K
C55 0.0022
C56 220P
Q46
R253 10
R169 3300
R242 3.9
R244 420
R45 360
R43 0.1 3W
C57 220/6.3V
TP9 -12V
-12V (LG-DT) 14A
-12V 15A
-12V 15B CA
-12V 16A DA
-12V 16B RA
-12V 17A TT
-12V 17B CONT PANEL
CD,DT,LG,RL SR,SV,SY-79/80 TC

FRAME WIRING (1/2) ; POWER SUPPLY

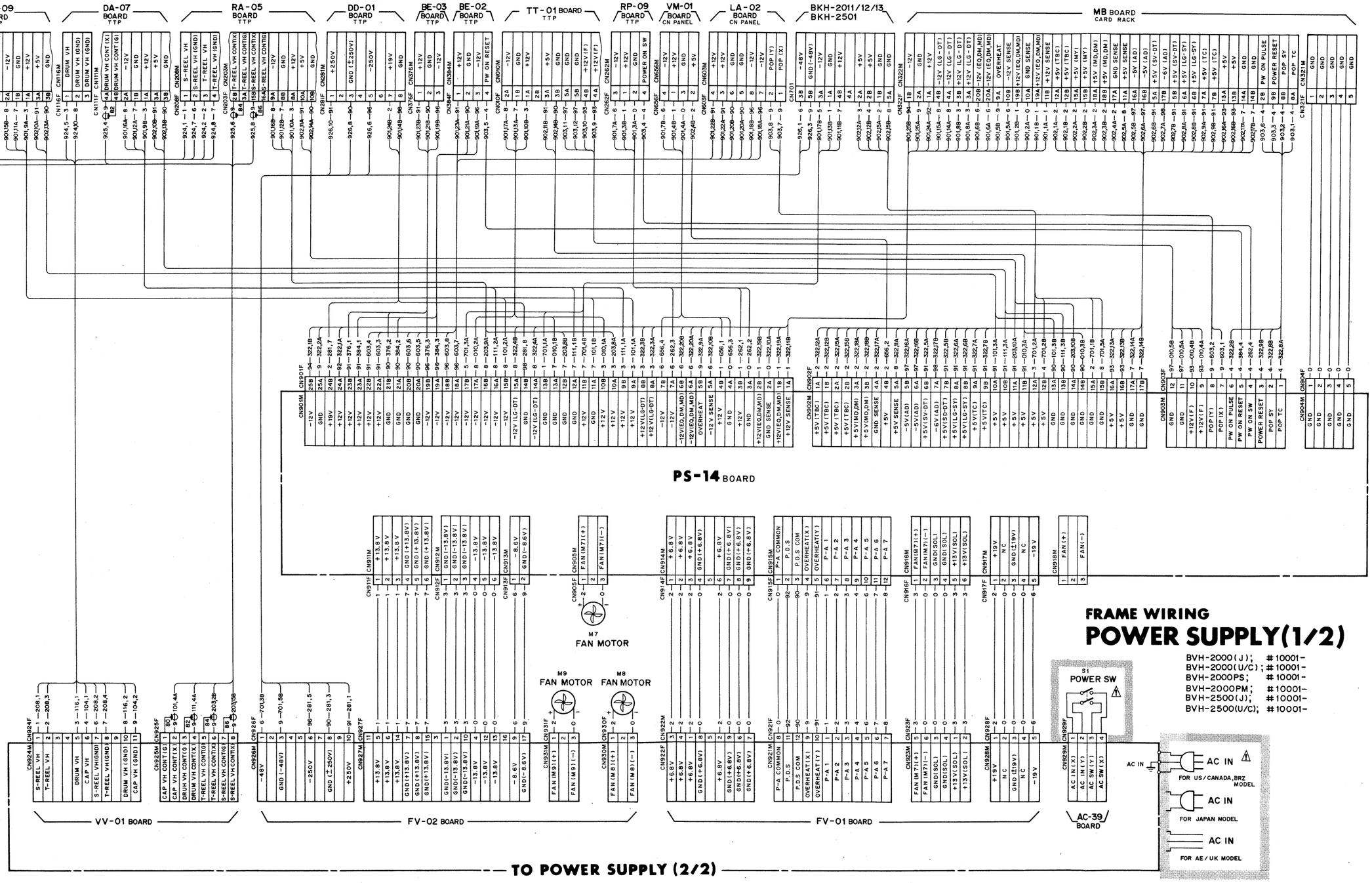

FRAME WIRING POWER SUPPLY(1/2)

BVH-2000(J); #10001-
BVH-2000(U/C); #10001-
BVH-2000PS; #10001-
BVH-2000PM; #10001-
BVH-2500(J); #10001-
BVH-2500(U/C); #10001-

CN-54 BOARD (1-607-596-11)

Component Side

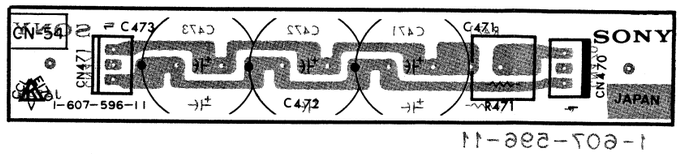

FRAME WIRING (2/2) ; POWER SUPPLY
CN-54 BOARD ; Fan Motor Relaying

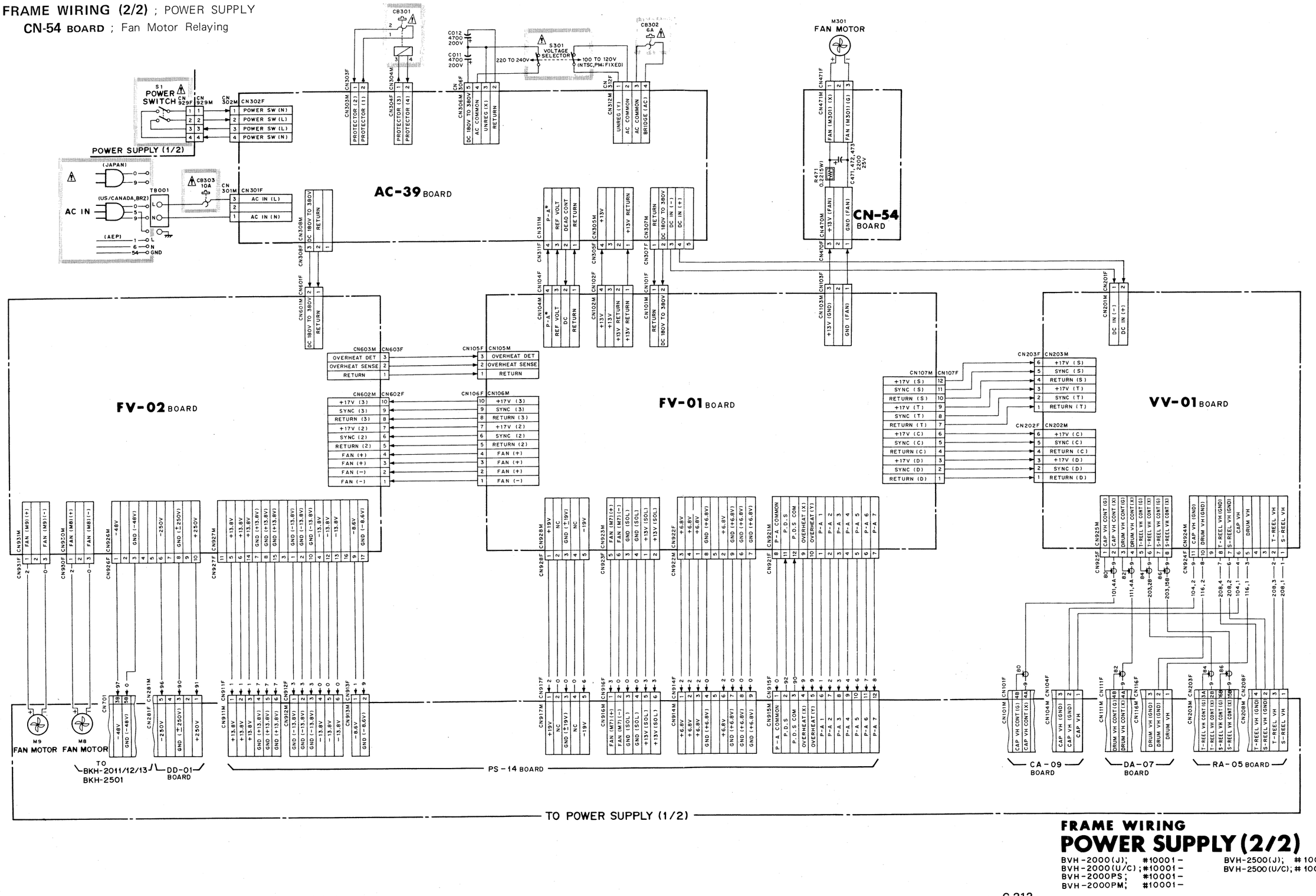

FRAME WIRING
POWER SUPPLY (2/2)

BVH-2000(J); #10001-
BVH-2000(U/C); #10001-
BVH-2000PS; #10001-
BVH-2000PM; #10001-
BVH-2500(J); #10001-
BVH-2500(U/C); #10001-

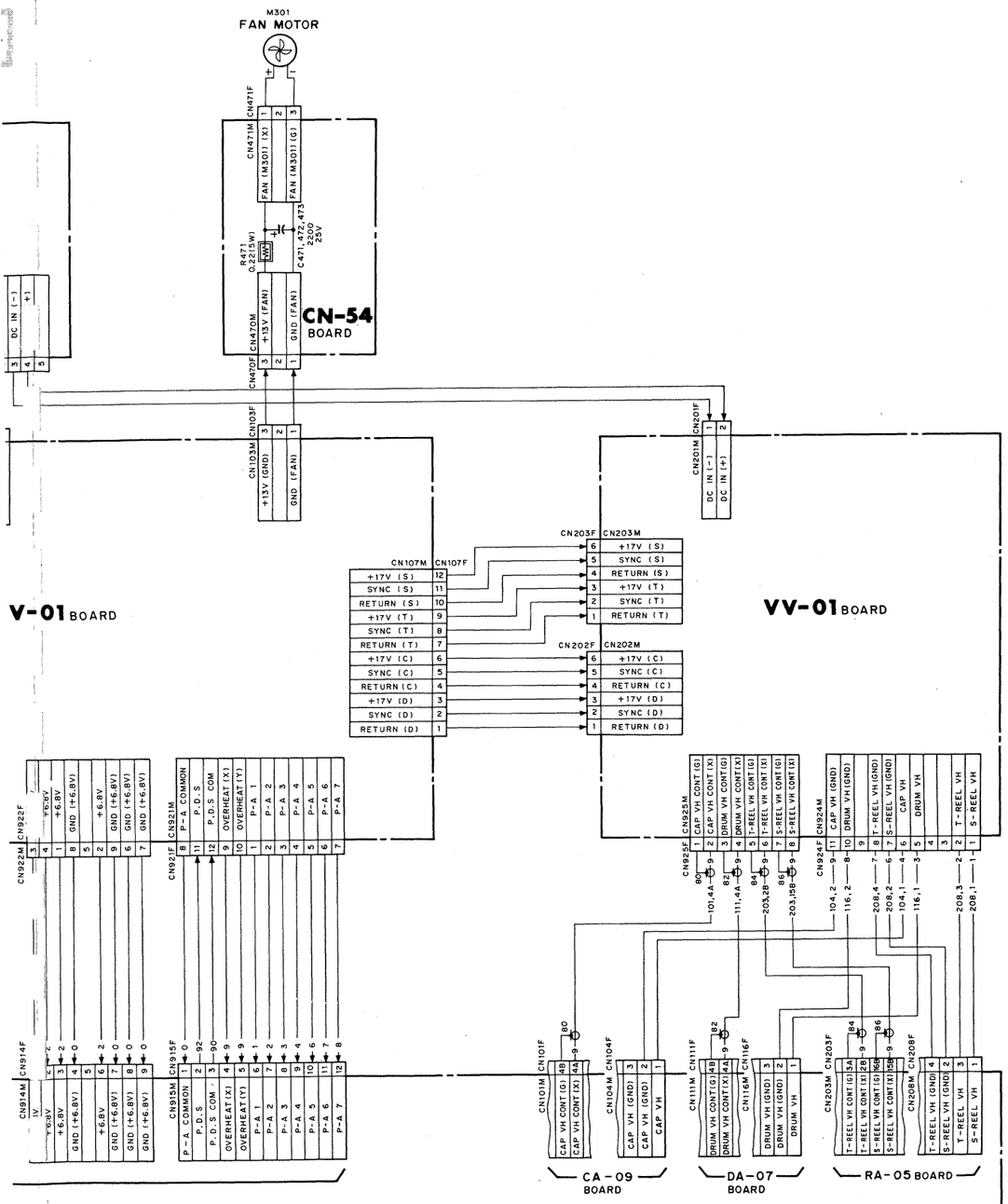

/2)

FRAME WIRING
POWER SUPPLY (2/2)

BVH-2000(J); #10001-
BVH-2000(U/C); #10001-
BVH-2000PS; #10001-
BVH-2000PM; #10001-

BVH-2500(J); #10001-
BVH-2500(U/C); #10001-

LA-02 BOARD (1-606-672-13)

Component Side

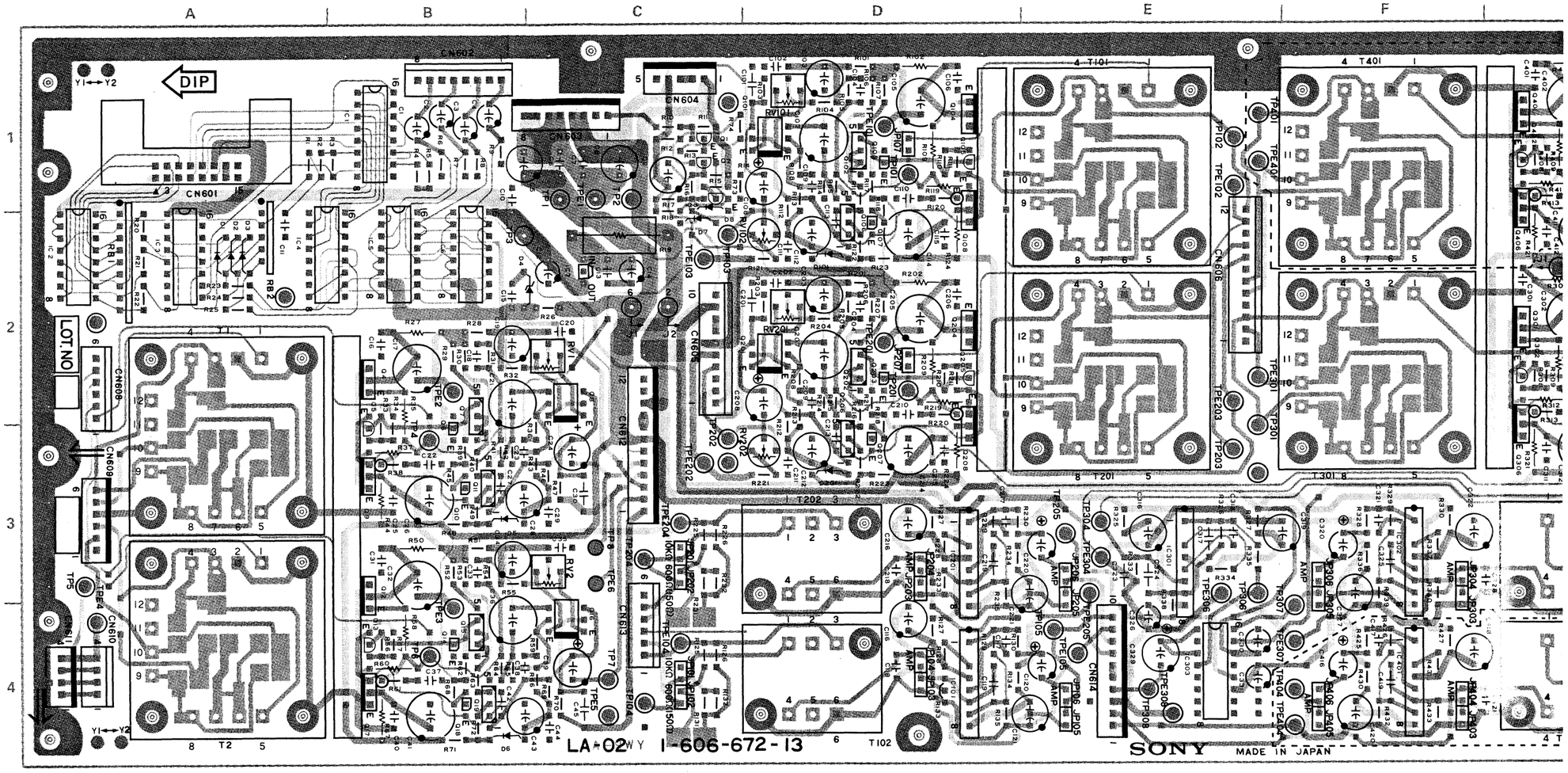

■ 1-606-672-13 COMPONENT SIDE

RB1

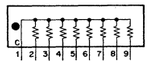

RB2

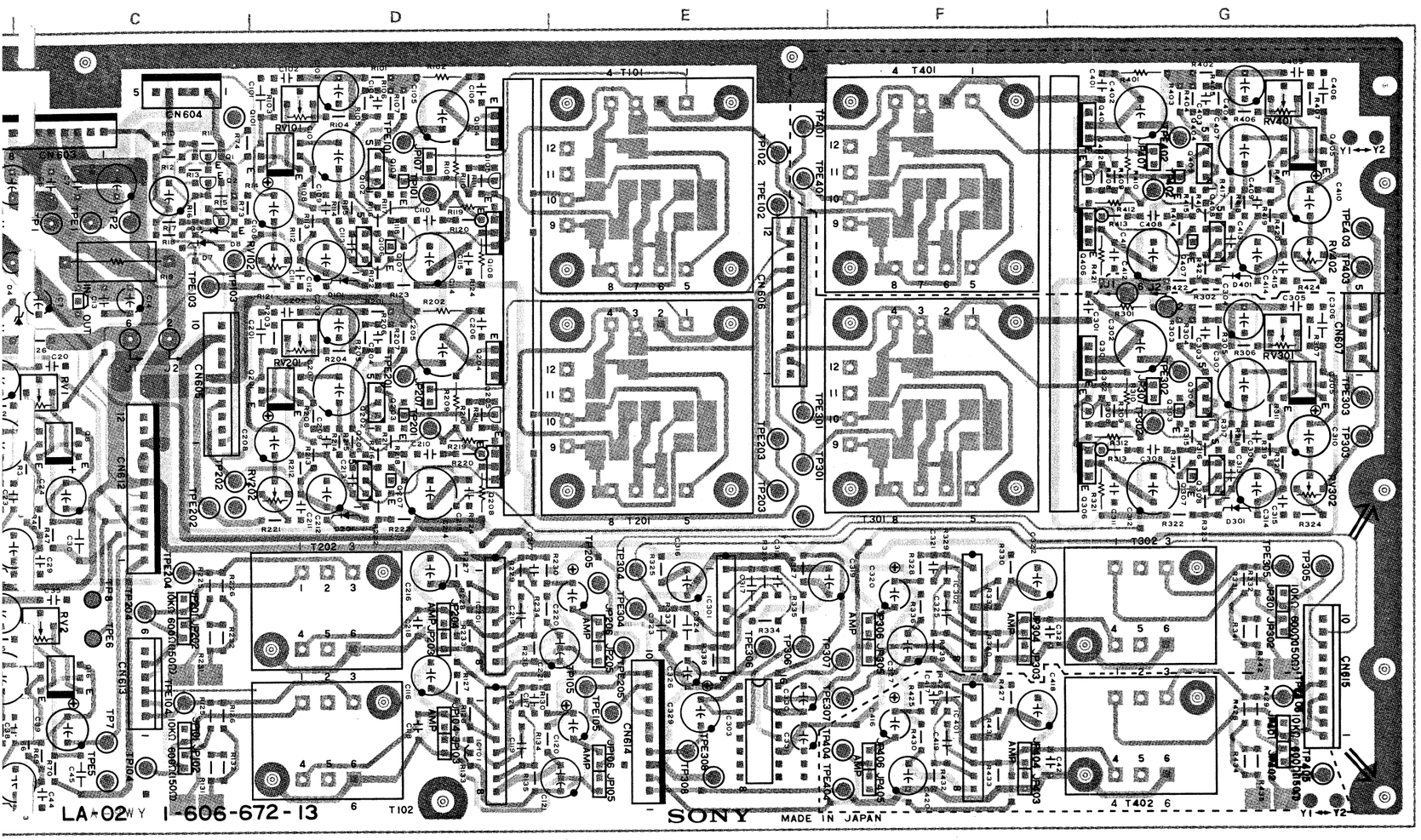

1-606-672-13

LA-02 (1-606-672-12 & UP)

BVH-2000(J,U/C)
BVH-2000PS
(00/02 MODEL)
BVH-2000PM
BVH-2500(J,U/C)

CN601M	1A	Q201	2D
CN602M	1B	Q202	2D
CN603M	1C	Q203	2D
CN604M	1C	Q204	2D
CN605M	2C	Q205	2D
CN606M	2E	Q206	3D
CN607M	2G	Q207	3D
CN608M	3A	Q208	3D
CN609M	3A	Q301	2G
CN610M	4A	Q302	2G
CN611M	4A	Q303	2G
CN612M	3C	Q304	2G
CN613M	4C	Q305	2G
CN614M	4E	Q306	3G
CN615M	4G	Q307	3G
		Q308	3G
		RB1	2A
D1	2A	RB2	2A
D2	2A		
D3	2A	RV1	2C
D4	2B	RV2	3C
D5	3B	RV101	1D
D6	4B	RV102	2D
D7	2C	RV201	2D
D8	2C	RV202	3D
D101	2D	RV301	2G
D201	3D	RV302	3G
D301	3G		
		TP1	1C
IC1	1B	TP2	1C
IC2	2A	TP3	2B
IC3	2A	TP4	3B
IC4	2B	TP5	4A
IC5	2B	TP6	4B
IC6	2B	TP7	4C
IC7	2C	TP8	3C
IC101	4D	TP101	1D
IC201	3D	TP102	1E
IC301	3E	TP103	2C
IC302	3F	TP104	4C
IC303	4E	TP105	4E
		TP201	3D
JP101	4C	TP203	3E
JP102	4C	TP204	3C
JP103	4D	TP205	3E
JP104	4D	TP301	3E
JP105	4E	TP302	3G
JP106	4E	TP303	3G
JP107	1D	TP304	3E
JP201	3C	TP305	3G
JP202	4C	TP306	4E
JP203	4D	TP307	4F
JP204	3D	TP308	4E
JP205	4E		
JP206	3E	TPE1	1C
JP207	2D	TPE2	3B
JP301	3G	TPE3	4B
JP302	3G	TPE4	4A
JP303	4F	TPE5	4C
JP304	3F	TPE6	4C
JP305	4F	TPE101	1D
JP306	3F	TPE102	1E
JP307	2G	TPE103	2C
		TPE104	4C
Q1	1C	TPE105	4E
Q2	1C	TPE201	2D
Q3	1C	TPE202	3C
Q4	2B	TPE203	3E
Q5	3B	TPE204	3C
Q6	3B	TPE205	4E
Q7	3B	TPE301	2E
Q8	3C	TPE302	2G
Q9	3B	TPE303	2G
Q10	3B	TPE304	3E
Q11	3B	TPE305	3G
Q12	4B	TPE306	4E
Q13	4B	TPE307	4F
Q14	4B	TPE308	4E
Q15	4B		
Q16	4C		
Q17	4B		
Q18	4B		
Q19	4B		
Q101	1D		
Q102	1D		
Q103	1D		
Q104	1D		
Q105	1D		
Q106	2D		
Q107	2D		
Q108	2D		

LA-02 (1-606-672-12 & UP)

BVH-2000PS
(04 MODEL)

CN601M	1A	Q1	1C
CN602M	1B	Q2	1C
CN603M	1C	Q3	1C
CN604M	1C	Q4	2B
CN605M	2C	Q5	3B
CN606M	2E	Q6	3B
CN607M	2G	Q7	3B
CN608M	3A	Q8	3C
CN609M	3A	Q9	3B
CN610M	4A	Q10	3B
CN611M	4A	Q11	3B
CN612M	3C	Q12	4B
CN613M	4C	Q13	4B
CN614M	4E	Q14	4B
CN615M	4G	Q15	4B
		Q16	4C
D1	2A	Q17	4B
D2	2A	Q18	4B
D3	2A	Q19	4B
D4	2B	Q101	1D
D5	3B	Q102	1D
D6	4B	Q103	1D
D7	2C	Q104	1D
D8	2C	Q105	1D
D101	2D	Q106	2D
D201	3D	Q107	2D
D301	3G	Q108	2D
D401	2G	Q201	2D
		Q202	2D
IC1	1B	Q203	2D
IC2	2A	Q204	2D
IC3	2A	Q205	2D
IC4	2B	Q206	3D
IC5	2B	Q207	3D
IC6	2B	Q208	3D
IC7	2C	Q301	2G
IC101	4D	Q302	2G
IC201	3D	Q303	2G
IC301	3E	Q304	2G
IC302	3F	Q305	2G
IC303	4E	Q306	3G
IC401	4F	Q307	3G
		Q308	3G
JP101	4C	Q401	1G
JP102	4C	Q402	1G
JP103	4D	Q403	1G
JP104	4D	Q404	1G
JP105	4E	Q405	1G
JP106	4E	Q406	2G
JP107	1D	Q407	2G
JP201	3C	Q408	2G
JP202	4C		
JP203	4D	RB1	2A
JP204	3D	RB2	2A
JP205	4E		
JP206	3E	RV1	2C
JP207	2D	RV2	3C
JP301	3G	RV101	1D
JP302	3G	RV102	2D
JP303	4F	RV201	2D
JP304	3F	RV202	3D
JP305	4F	RV301	2G
JP306	3F	RV302	3G
JP307	2G	RV401	1G
JP401	4G	RV402	2G
JP402	4G		
JP403	4F		
JP404	4F		
JP405	4F		
JP406	4F		
JP407	1G		

TP1	1C	TPE1	1C
TP2	1C	TPE2	3B
TP3	2B	TPE3	4B
TP4	3B	TPE4	4A
TP5	4A	TPE5	4C
TP6	4B	TPE6	4C
TP7	4C	TPE101	1D
TP8	3C	TPE102	1E
TP101	1D	TPE103	2C
TP102	1E	TPE104	4C
TP103	2C	TPE105	4E
TP104	4C	TPE201	2D
TP105	4E	TPE202	3C
TP201	3D	TPE203	3E
TP203	3E	TPE204	3C
TP204	3C	TPE205	4E
TP205	3E	TPE301	2E
TP301	3E	TPE302	2G
TP302	3G	TPE303	2G
TP303	3G	TPE304	3E
TP304	3E	TPE305	3G
TP305	3G	TPE306	4E
TP306	4E	TPE307	4F
TP307	4F	TPE308	4E
TP308	4E		

LA-02 BOARD

Audio Line IN/OUT Amplifier

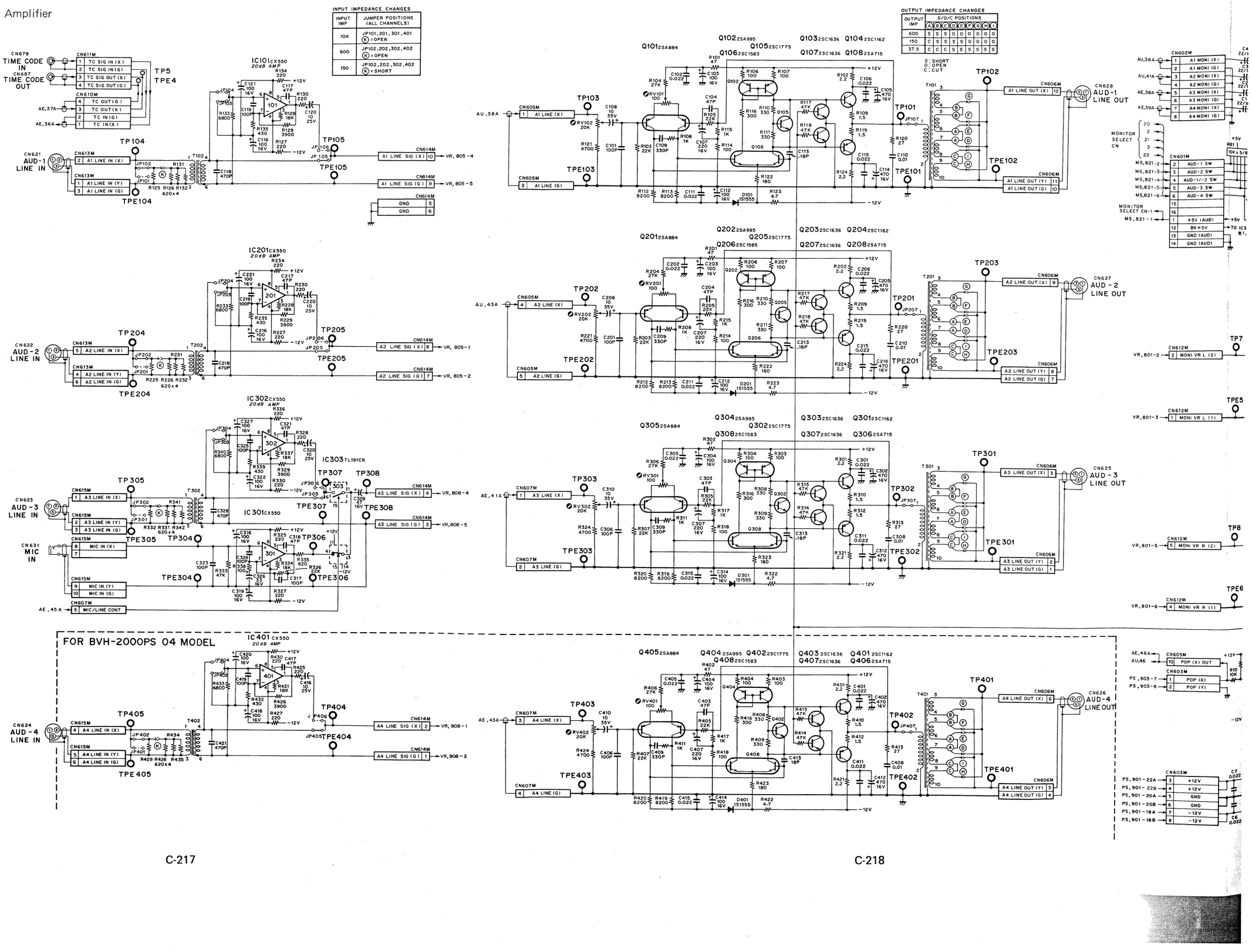

LA-02 CONNECTOR PANEL

OUTPUT IMPEDANCE CHANGES

OUTPUT IMP	S/O/C POSITIONS									
	A	B	C	D	E	F	G	H	I	J
600	S	S	S	O	O	O	O	O	O	O
150	C	S	S	S	S	O	O	O	O	O
37.5	C	C	C	S	S	S	S	S	S	S

S : SHORT
O : OPEN
C : CUT

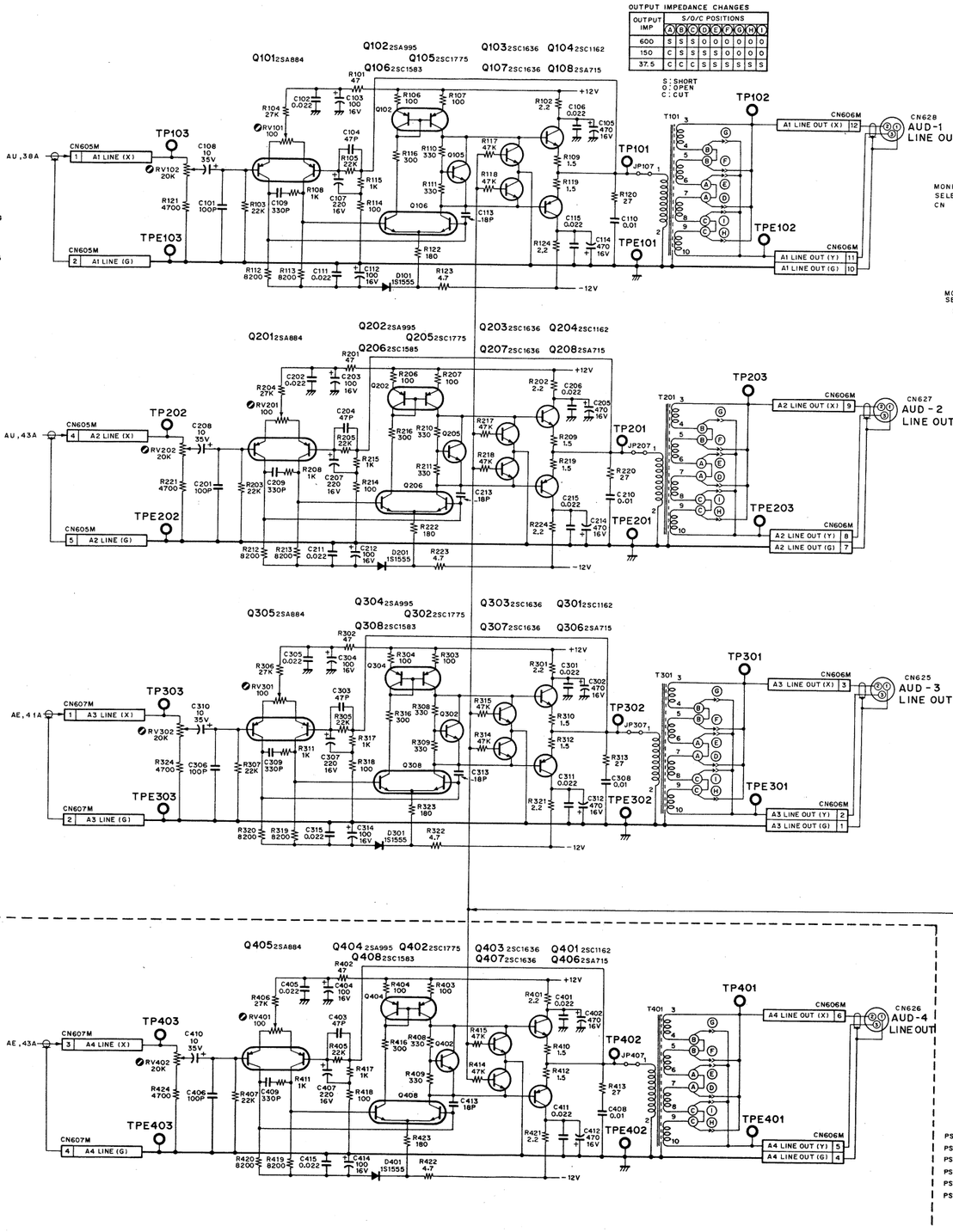

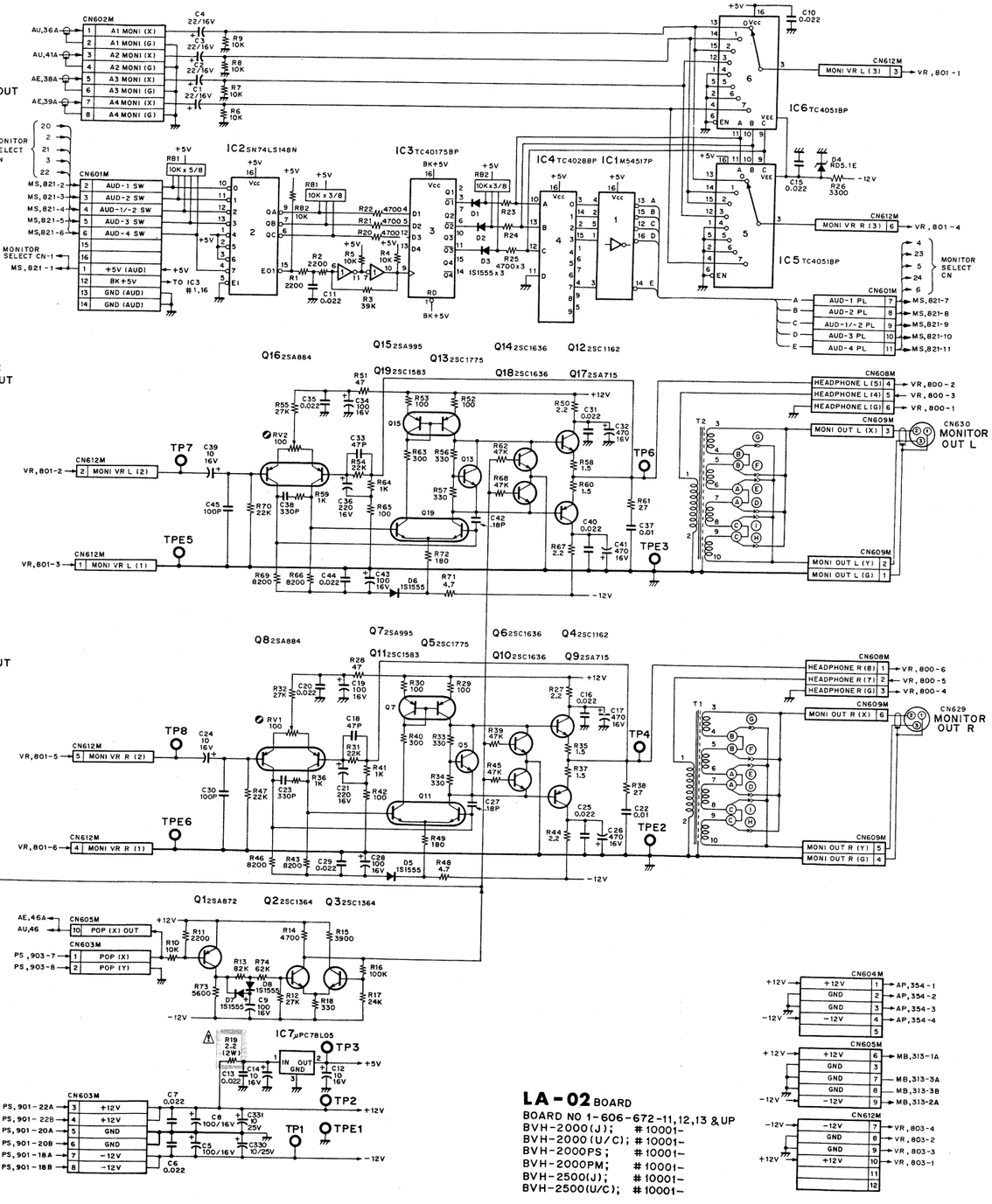

LA-02 BOARD
BOARD NO 1-606-672-11,12,13 & UP
BVH-2000(J); #10001-
BVH-2000(U/C); #10001-
BVH-2000PS; #10001-
BVH-2000PM; #10001-
BVH-2500(J); #10001-
BVH-2500(U/C); #10001-

VM-01 BOARD (1-606-658-12)

Component Side

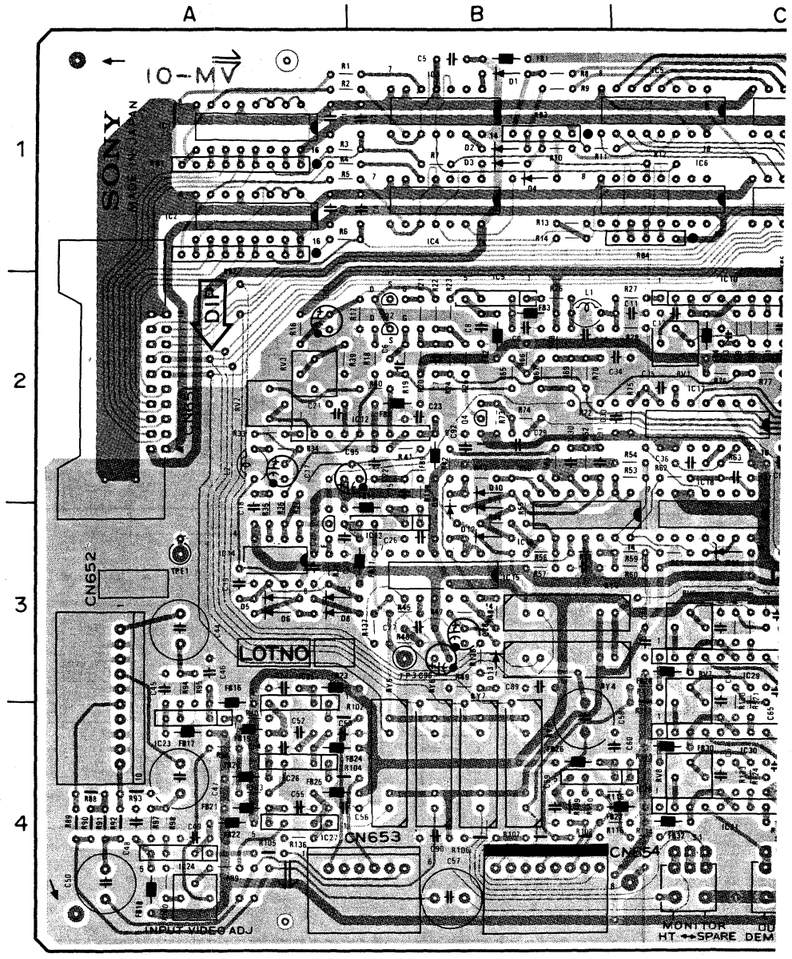

1-606-658-12 COMPONENT SIDE

RB1, 2

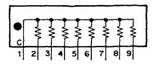

RB3, 4

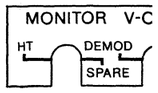

VM-01 BOARD (1-606-658-12)

Component Side

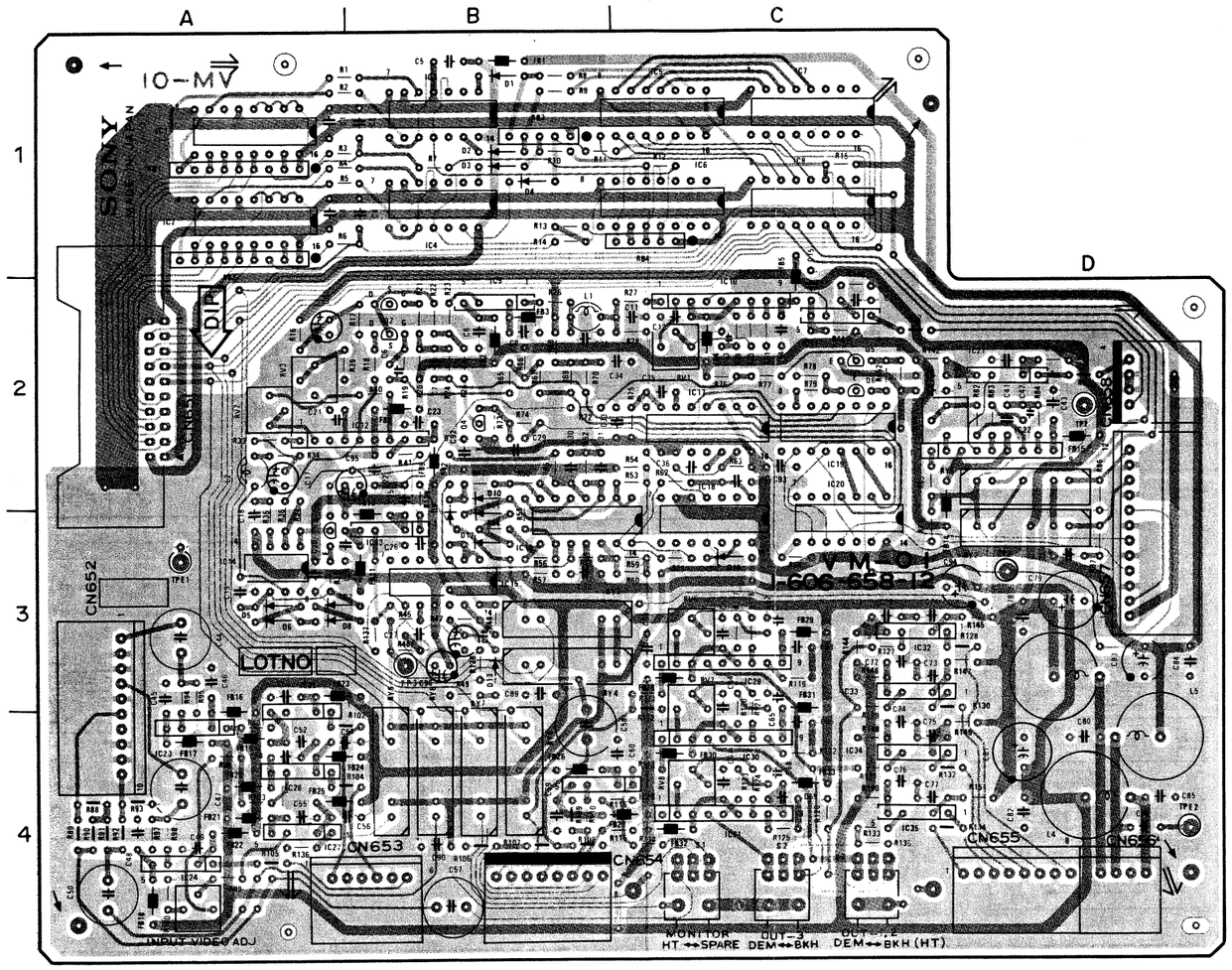

1-606-658-12 COMPONENT SIDE

1-606-658-12

VM-01 (1-606-658-12)

BVH-2000(J,U/C)		Q1	2B
BVH-2000PS		Q2	2B
BVH-2000PM		Q3	3A
		Q4	2B
CN651M		Q5	2C
	2A	Q6	2C
CN652M			
	3A	RB1	1A
CN653M		RB2	1A
	4B	RB3	1B
CN654M		RB4	1C
	4B		
CN655M		RV1	2C
	4D	RV2	2A
CN656M		RV3	2A
	4D	RV4	2C
CN657M		RV5	4A
	3D	RV6	3C
CN658M		RV7	3C
	2D	RV8	4C
D1	1B	RY1	2D
D2	1B	RY2	3D
D3	1B	RY3	3B
D4	1B	RY4	3B
D5	3A	RY5	4B
D6	3A	RY6	4B
D7	3A	RY7	4B
D8	3A	RY8	4B
D9	3B		
D10	2B	S1	4C
D11	3B	S2	4C
D12	3B	S3	4C
D13	3B		
D14	3C	TP1	3D
		TP2	2D
IC1	1A	TP3	3B
IC2	1A		
IC3	1B	TPE1	3A
IC4	1B	TPE2	4D
IC5	1C		
IC6	1C		
IC7	1C		
IC8	1C		
IC9	2B		
IC10	2C		
IC11	2C		
IC12	2B		
IC13	3B		
IC14	3A		
IC15	3B		
IC16	3B		
IC17	2C		
IC18	3C		
IC19	2C		
IC20	3C		
IC21	2D		
IC22	2D		
IC23	4A		
IC24	4A		
IC25	4A		
IC26	4A		
IC27	4A		
IC28	4B		
IC29	3C		
IC30	4C		
IC31	4C		
IC32	3C		
IC33	3C		
IC34	4C		
IC35	4C		

RB1, 2

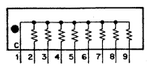

RB3, 4

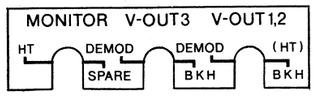

VM-01 BOARD

Video Buffer/Monitor Select

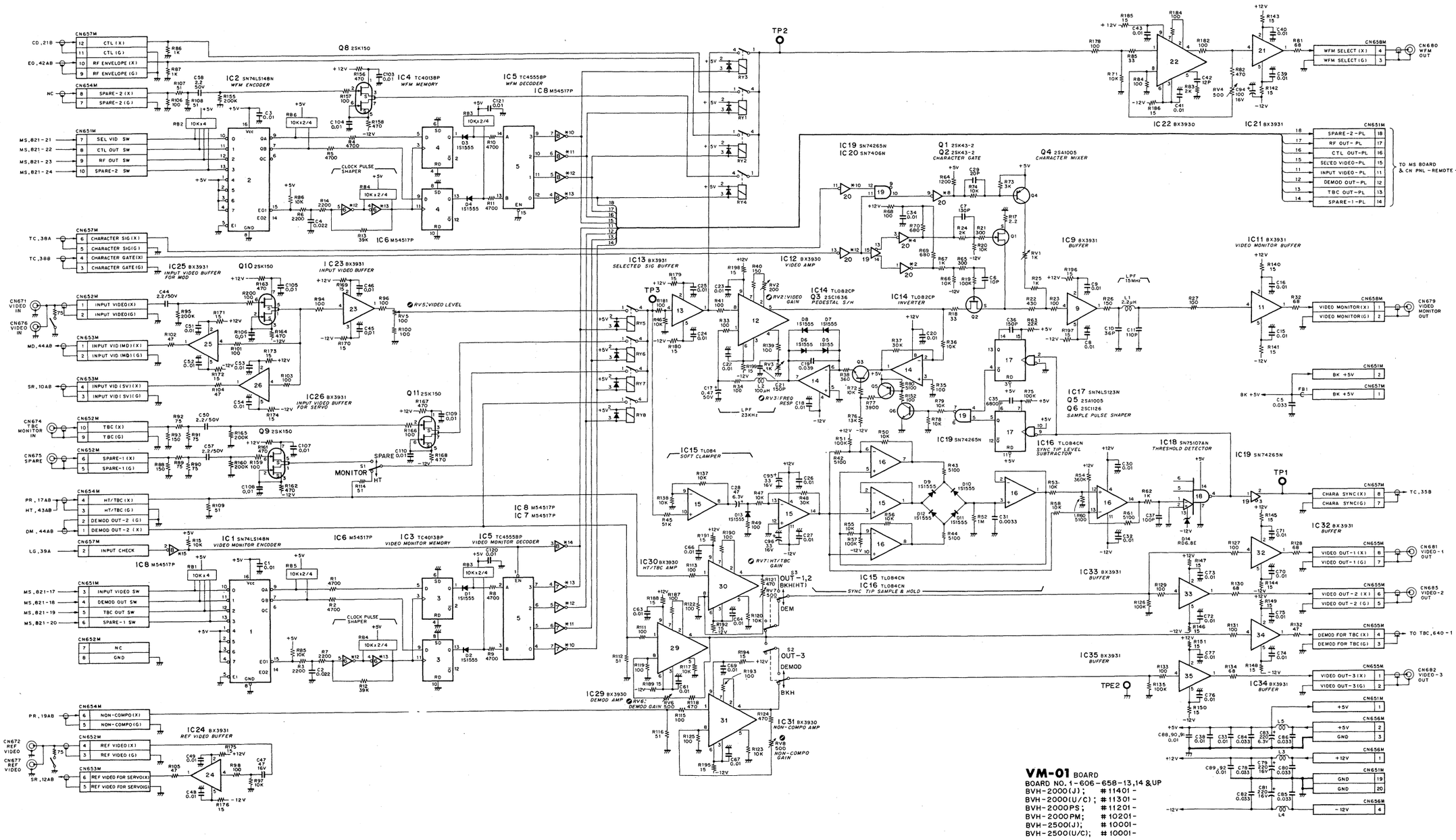

VM-01 BOARD
BOARD NO. 1-606-658-13,14 &UP
BVH-2000(J); #11401-
BVH-2000(U/C); #11301-
BVH-2000PS; #11201-
BVH-2000PM; #10201-
BVH-2500(J); #10001-
BVH-2500(U/C); #10001-

C-224(4/5)

C-224(5/5)

CN-37 CONNECTOR PANEL

CN-37 BOARD (1-606-713-11)

Component Side

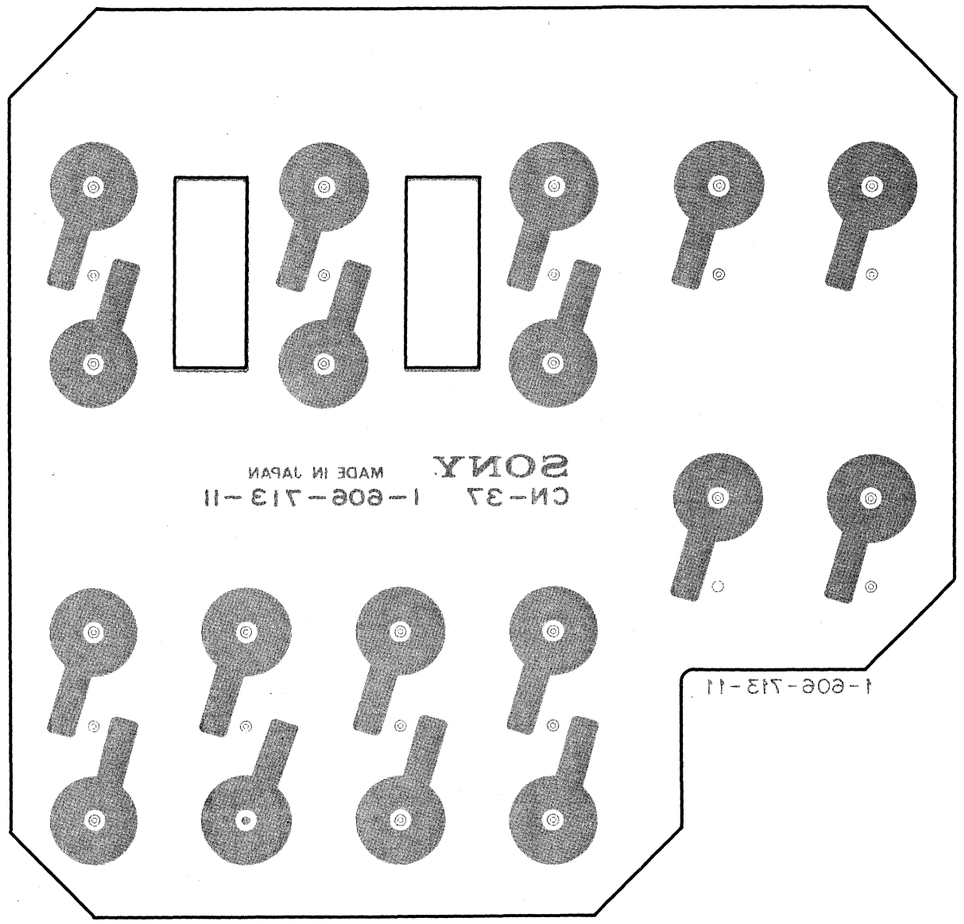

VM-01 BOARD

Video Buffer/Monitor Select

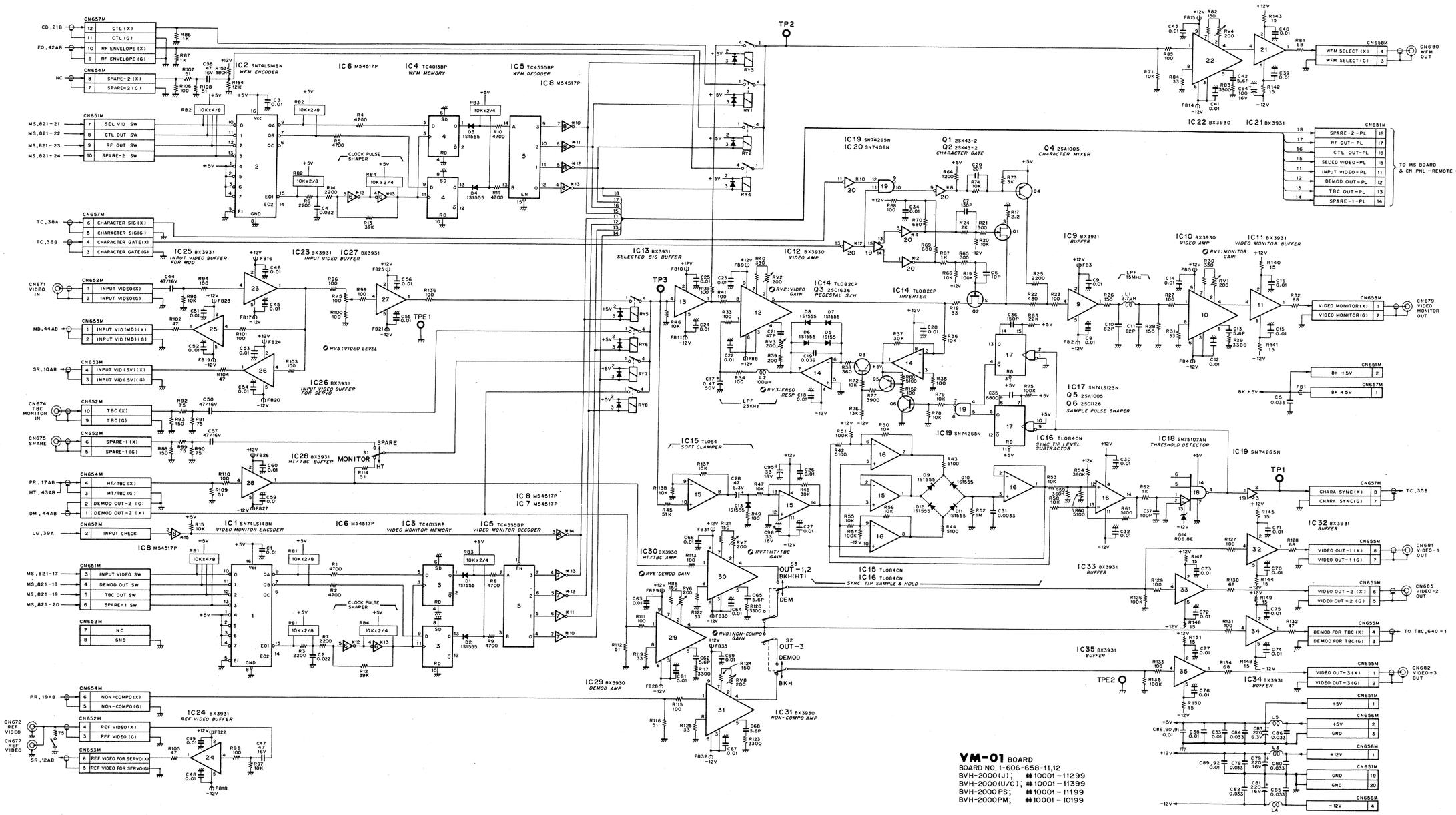

VM-01 BOARD
BOARD NO. 1-606-658-11,12
BVH-2000(J); #10001-11299
BVH-2000(U/C); #10001-11399
BVH-2000PS; #10001-11199
BVH-2000PM; #10001-10199

VM-01 BOARD (1-606-658-14)

Component Side

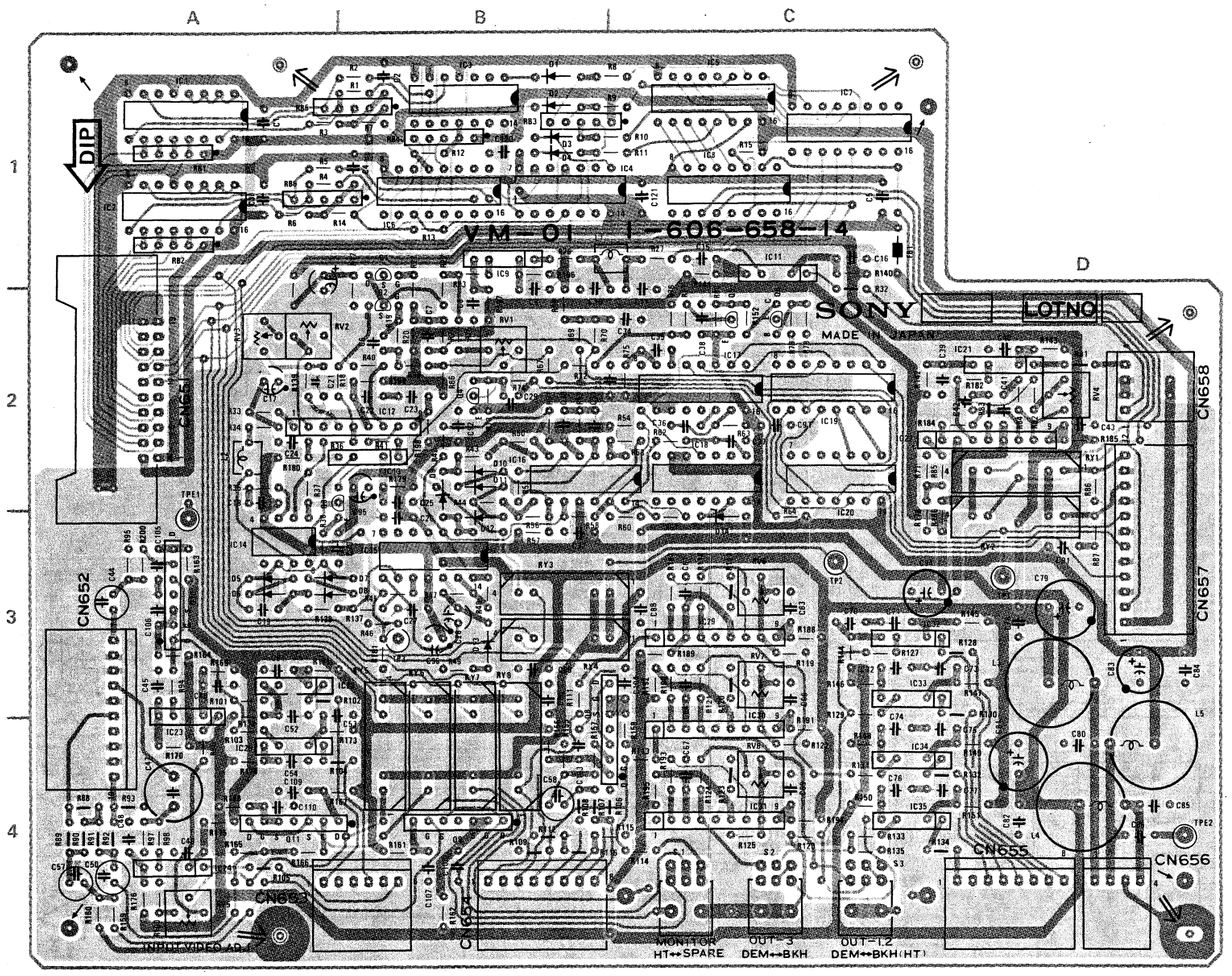

■ 1-606-658-14 COMPONENT SIDE ■ 1-606-658-14 SOLDER SIDE

VM-01 (1-606-658-14 & UP)

BVH-2000(J,U/C)
BVH-2000PS
BVH-2000PM
BVH-2500(J,U/C)

CN651M		Q1	2B
	2A	Q2	2B
CN652M		Q3	2B
	3A	Q4	2B
CN653M		Q5	2C
	4A	Q6	2C
CN654M		Q8	4B
	4B	Q9	4B
CN655M		Q10	3A
	4D	Q11	4A
CN656M			
	4D	RB1	1A
CN657M		RB2	1A
	3D	RB3	1B
CN658M		RB4	1B
	2D	RB5	1B
		RB6	1A
D1	1B		
D2	1B	RV1	2B
D3	1B	RV2	2A
D4	1B	RV3	2A
D5	3A	RV4	2D
D6	3A	RV5	4A
D7	3A	RV6	3C
D8	3A	RV7	3C
D9	2B	RV8	4C
D10	2B		
D11	2B	RY1	2D
D12	3B	RY2	3D
D13	3B	RY3	3B
D14	3C	RY4	3B
		RY5	4B
IC1	1A	RY6	4B
IC2	1A	RY7	4B
IC3	1B	RY8	4B
IC4	1B		
IC5	1C	S1	4C
IC6	1B	S2	4C
IC7	1C	S3	4C
IC8	1C		
IC9	2B	TP1	3D
IC11	2C	TP2	3C
IC12	2B	TP3	3B
IC13	2B		
IC14	3A	TPE1	3A
IC15	3B	TPE2	4D
IC16	2B		
IC17	2C		
IC18	2C		
IC19	2C		
IC20	2C		
IC21	2D		
IC22	2D		
IC23	4A		
IC24	4A		
IC25	3A		
IC26	4A		
IC29	3C		
IC30	4C		
IC31	4C		
IC32	3C		
IC33	3C		
IC34	4C		
IC35	4C		

RB1, 2, 3, 4, 5, 6

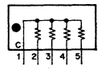

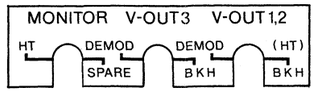

FRAME WIRING – AUDIO/VIDEO ; CONNECTOR PANEL

CN-37 BOARD ; Video Connector Panel

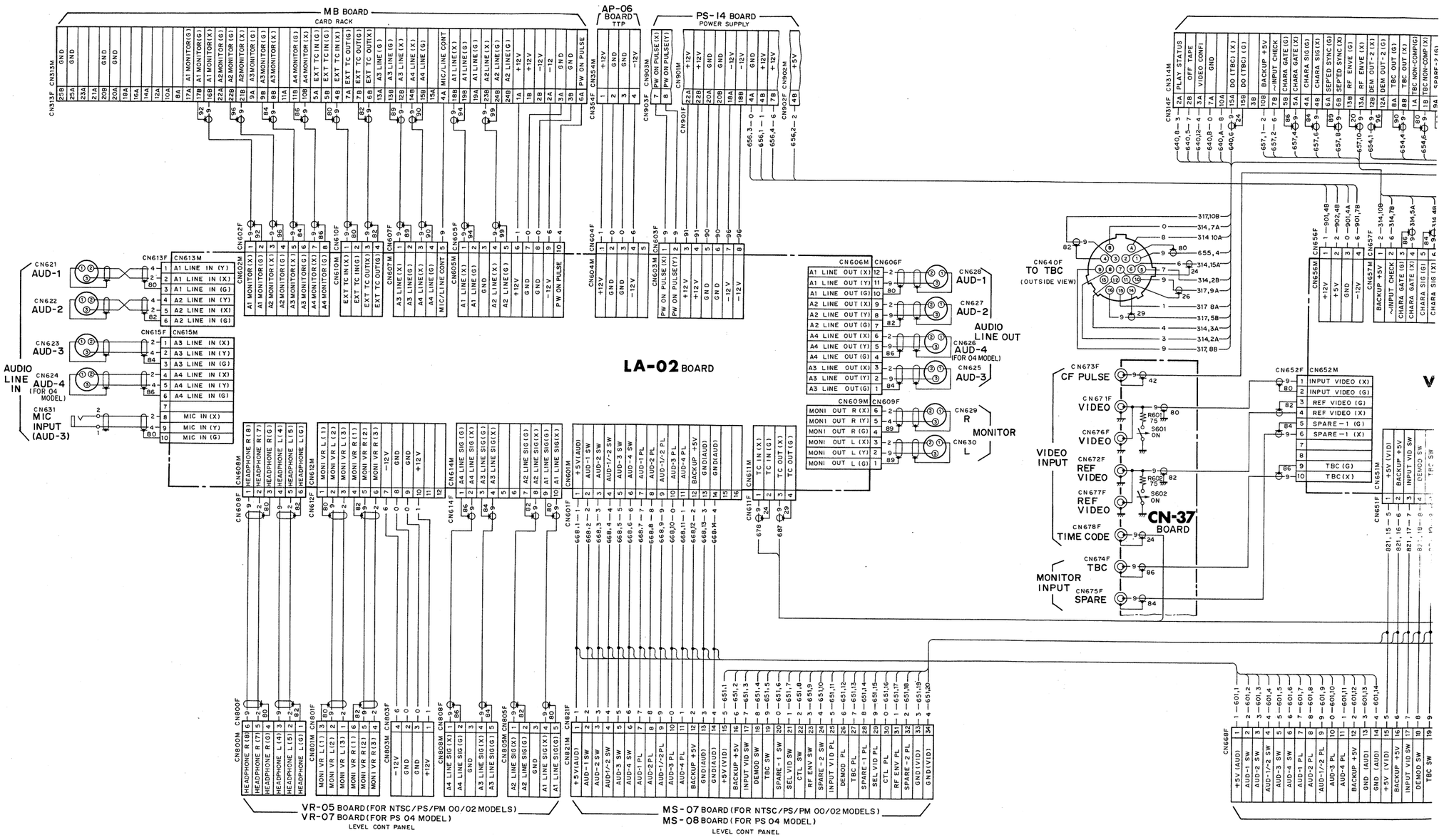

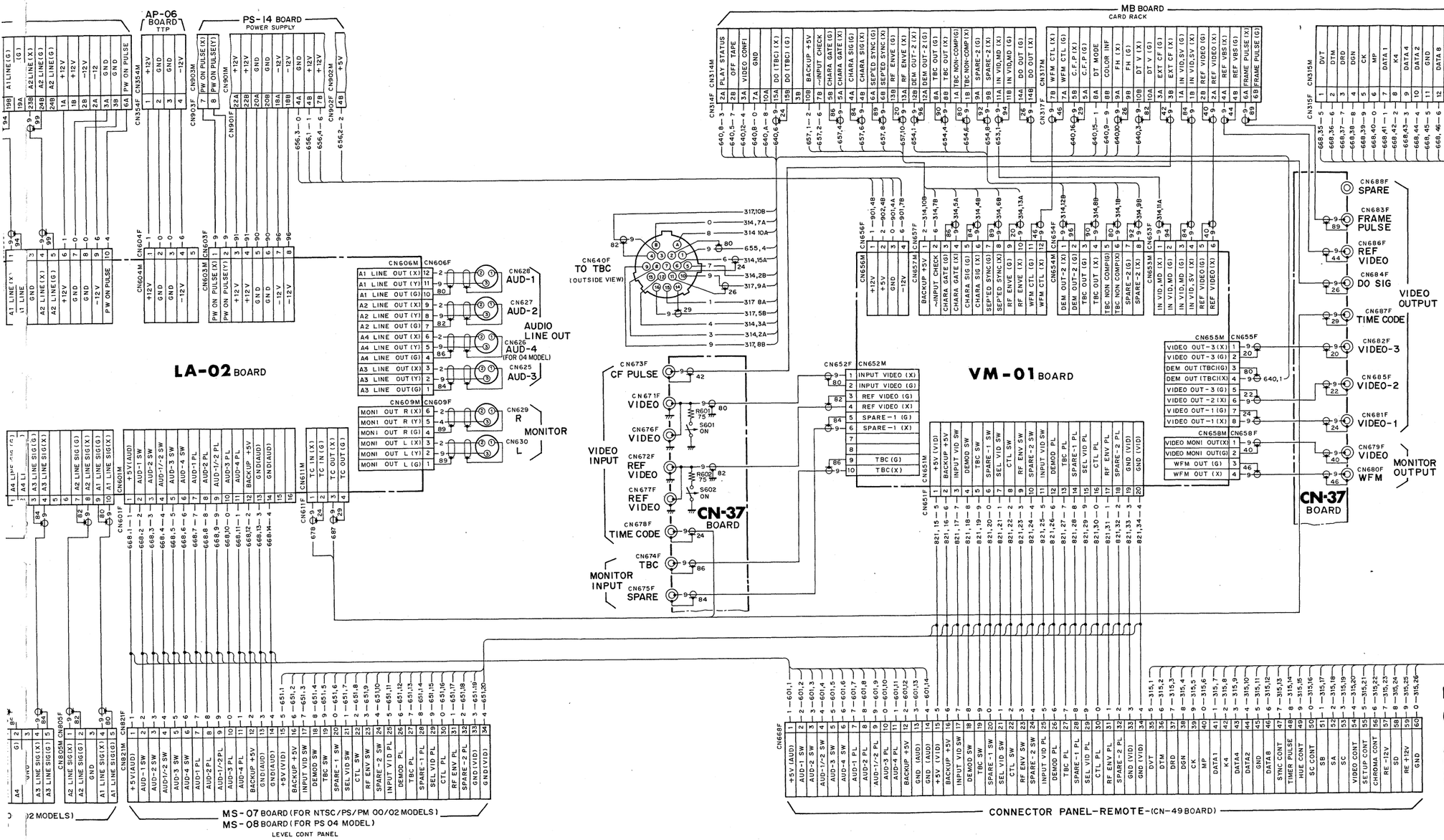

FRAME WIRING

CONNECTOR PANEL AUDIO/VIDEO

BVH-2000(J); #10001-
BVH-2000(U/C); #10001-
BVH-2000PS; #10001-
BVH-2000PM; #10001-
BVH-2500(J); #10001-
BVH-2500(U/C); #10001-

CN-49 BOARD (1-606-714-12)
Component Side

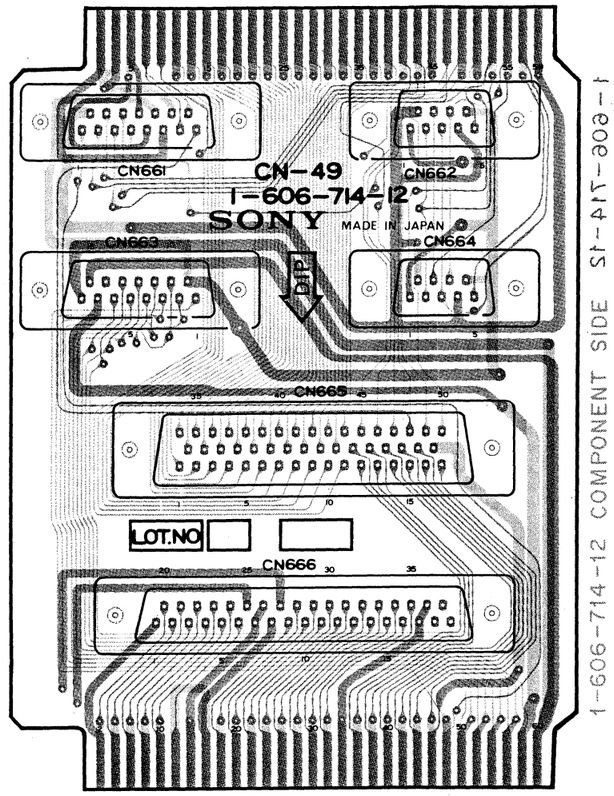

FRAME WIRING – REMOTE ; CONNECTOR PANEL

CN-49 BOARD; Remote Connector Panel

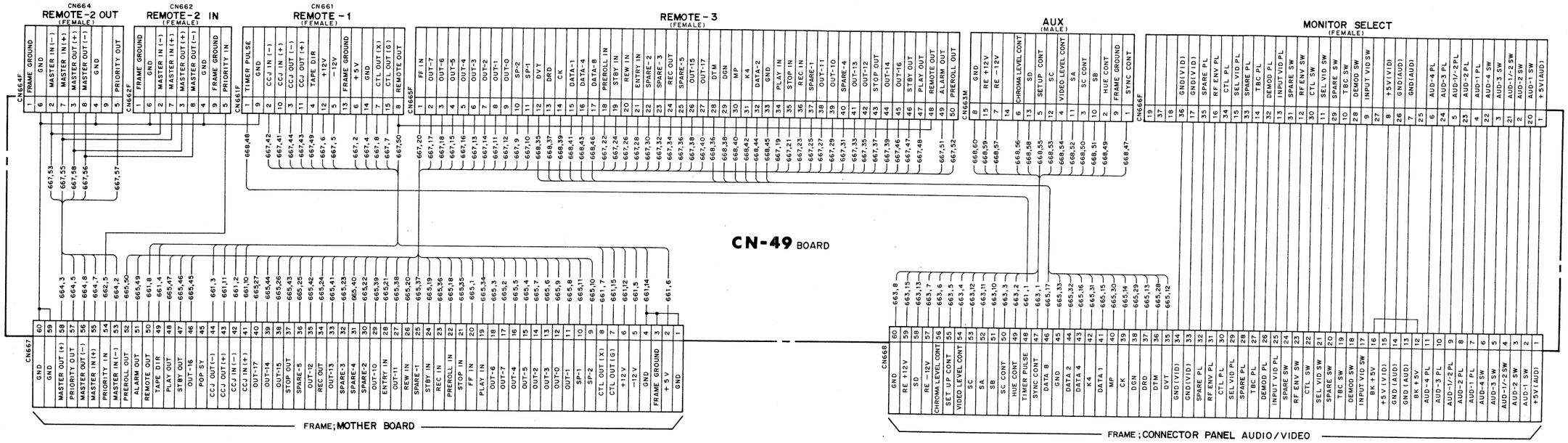

FRAME WIRING

CONNECTOR PANEL-REMOTE

BVH-2000(J); #10001-
BVH-2000(U/C); #10001-
BVH-2000PS; #10001-
BVH-2000PM; #10001-
BVH-2500(J); #10001-
BVH-2500(U/C); #10001-